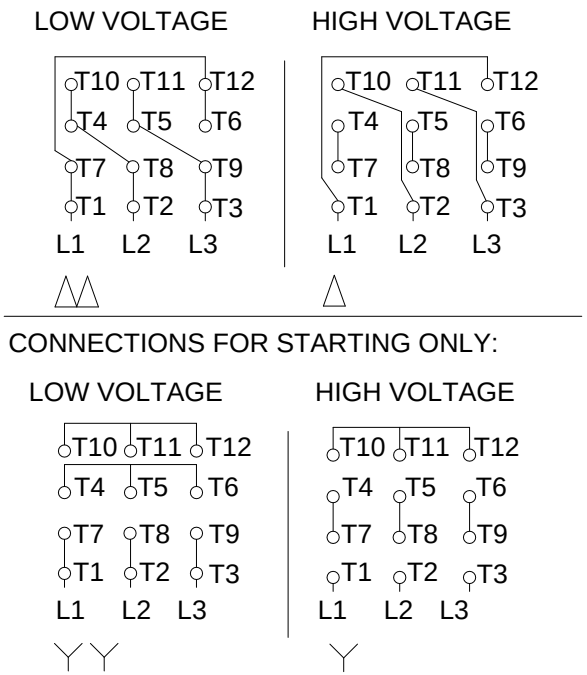

Notes: Downloaded from http://dealerselectric.com
Generated for Model #02518XT3ER284TC

Performed by:

Checked:

Customer:

Three-Phase : Explosion Proof - NEMA Premium

Three-phase induction motor Frame 284T - IP55	23-SEP-2016	weg