LOW VOLTAGE

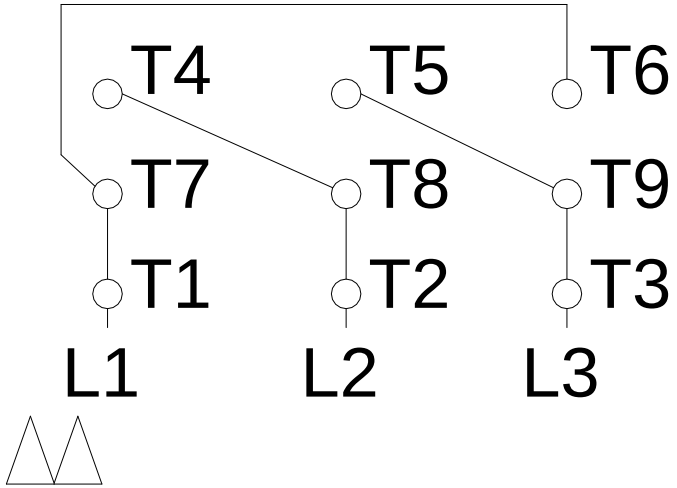

HIGH VOLTAGE

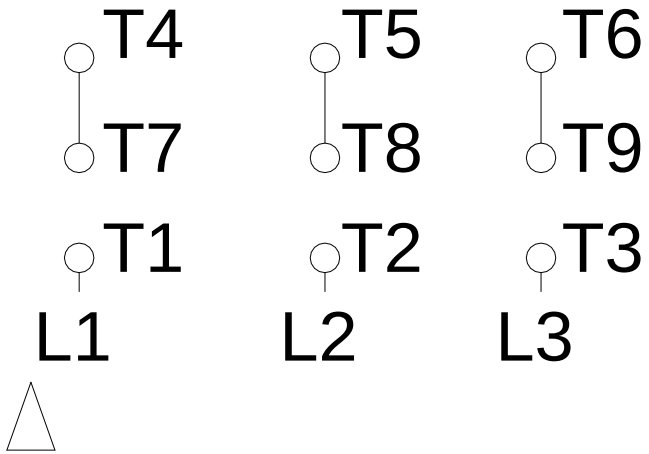

Notes: Downloaded from http://dealerselectric.com
Generated for Model #01036ET3EBM215T-W22

Performed by:

Checked:

Customer:

W22 Brake Motor - NEMA Premium Efficiency

Three-phase induction motor Frame 213/5T - IP55	13-SEP-2016	weg