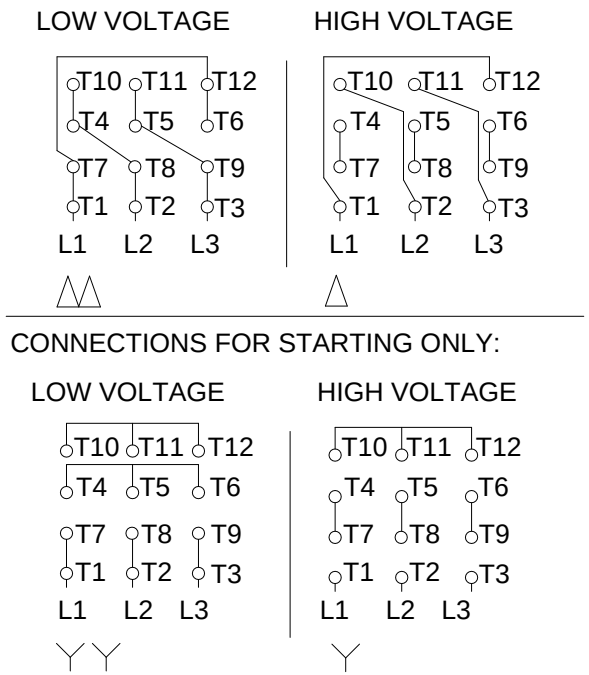

Notes: Downloaded from http://dealerselectric.com
Generated for Model #01012ET3E256T-SG

Performed by:

Checked:

Customer:

W01 (Rolled Steel) General Purpose TEFC

Three-phase induction motor
Frame 254/6T - IP55

13-SEP-2016