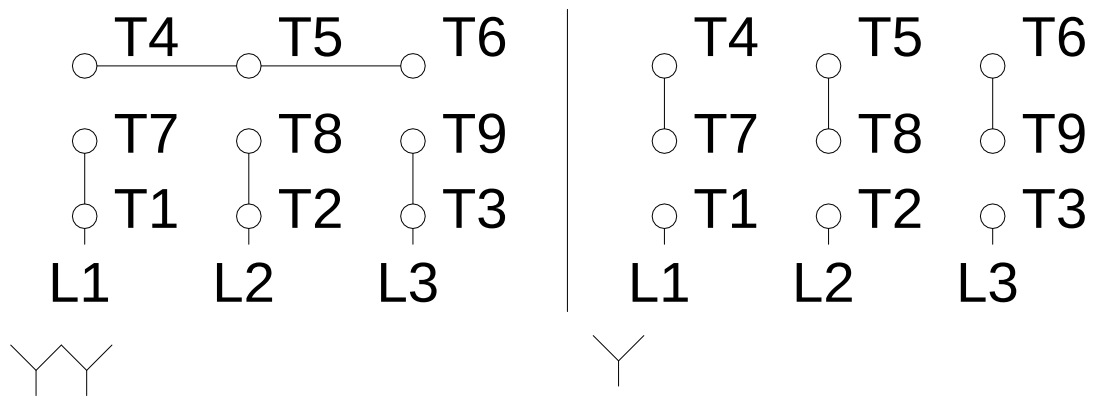

Notes: Downloaded from http://dealerselectric.com
Generated for Model #00236ET3E145T-SG

Performed by:

Checked:

Customer:

W01 (Rolled Steel) General Purpose TEFC

Three-phase induction motor Frame 143/5T - IP55	12-SEP-2016	weg