	Dealers Industrial Equipment	No.:
		Date: 23-SEP-2016

Customer :

TECHNICAL PROPOSAL

Three-phase induction motor - Squirrel cage rotor

Product line	: Three-Phase: W22 IEEE-841™ Petrochem Motors - NEMA Premium® Efficiency
Catalog Number	: 04018ST3QIE324T-W22
List Price	: $4,692

Notes:
Downloaded from http://dealerselectric.com
Generated for Model #04018ST3QIE324T-W22

Performed by:	Checked:

	Dealers Industrial Equipment	No.:
		Date: 23-SEP-2016

DATA SHEET

Three-phase induction motor - Squirrel cage rotor

Customer	:
Product line	: Three-Phase: W22 IEEE-841™ Petrochem Motors - NEMA Premium® Efficiency

Frame	: 324/6T
Output	: 40 HP
Frequency	: 60 Hz
Poles	: 4
Full load speed	: 1770 rpm
Slip	: 1.67 %
Voltage	: 460 V
Rated current	: 47.1 A
Locked rotor current	: 287 A
Locked rotor current (Il/In)	: 6.1
No-load current	: 16.0 A
Full load torque	: 117 lb.ft
Locked rotor torque	: 220 %
Breakdown torque	: 240 %
Design	: B
Insulation class	: F
Temperature rise	: 80 K
Locked rotor time	: 20 s (hot)
Service factor	: 1.25
Duty cycle	: S1
Ambient temperature	: -20°C - +40°C
Altitude	: 1000 m
Degree of Protection	: IP55
Approximate weight	: 492 lb
Moment of inertia	: 9.1624 sq.ft.lb
Noise level	: 66 dB(A)

	D.E.	N.D.E.
Bearings	6312 C3	6212 C3
Regreasing interval	20000 h	20000 h
Grease amount	21 g	13 g

Load	Power factor	Efficiency (%)
100%	0.85	94.1
75%	0.80	94.1
50%	0.72	93.6

Notes:

Downloaded from http://dealerselectric.com

Generated for Model #04018ST3QIE324T-W22

Performed by	Checked

Dealers Industrial Equipment

No.:

Date: 23-SEP-2016

PERFORMANCE CURVES RELATED TO RATED OUTPUT

Three-phase induction motor - Squirrel cage rotor

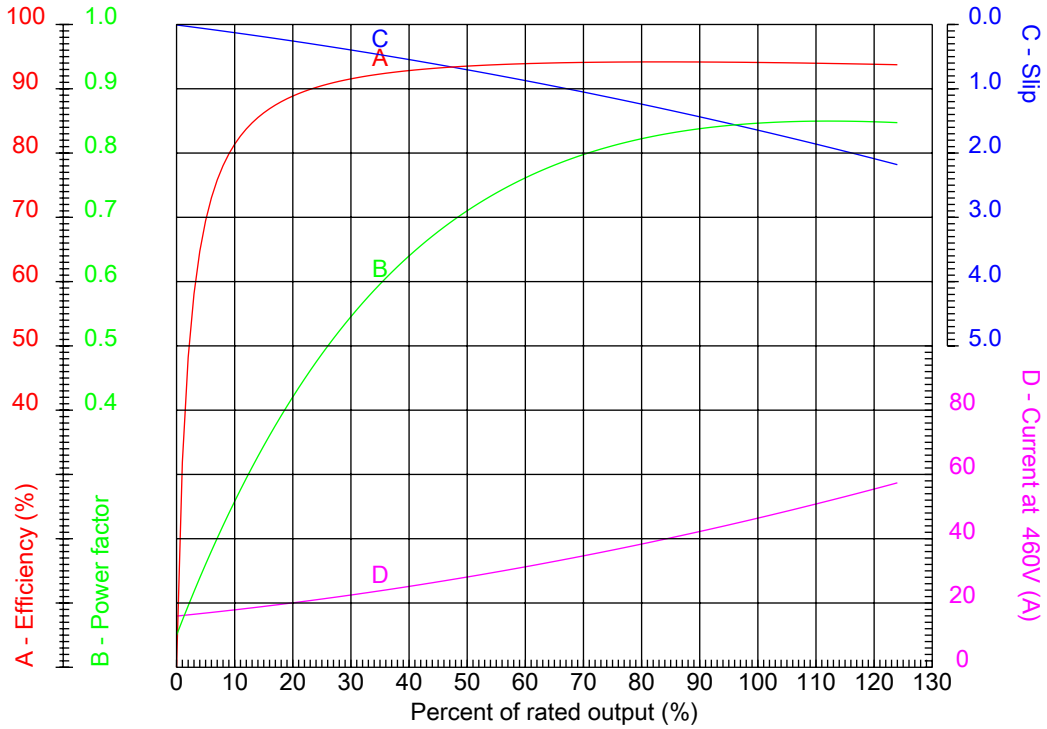

Customer	:	
Product line	:	Three-Phase: W22 IEEE-841™ Petrochem Motors - NEMA Premium® Efficiency

Frame	: 324/6T	Locked rotor current (Il/In)	: 6.1
Output	: 40 HP	Duty cycle	: S1
Frequency	: 60 Hz	Service factor	: 1.25
Full load speed	: 1770 rpm	Design	: B
Voltage	: 460 V	Locked rotor torque	: 220 %
Rated current	: 47.1 A	Breakdown torque	: 240 %
Insulation class	: F		

Notes:
Downloaded from http://dealerselectric.com
Generated for Model #04018ST3QIE324T-W22

Performed by	Checked

Dealers Industrial Equipment

No.:

Date: 23-SEP-2016

CHARACTERISTIC CURVES RELATED TO SPEED

Three-phase induction motor - Squirrel cage rotor

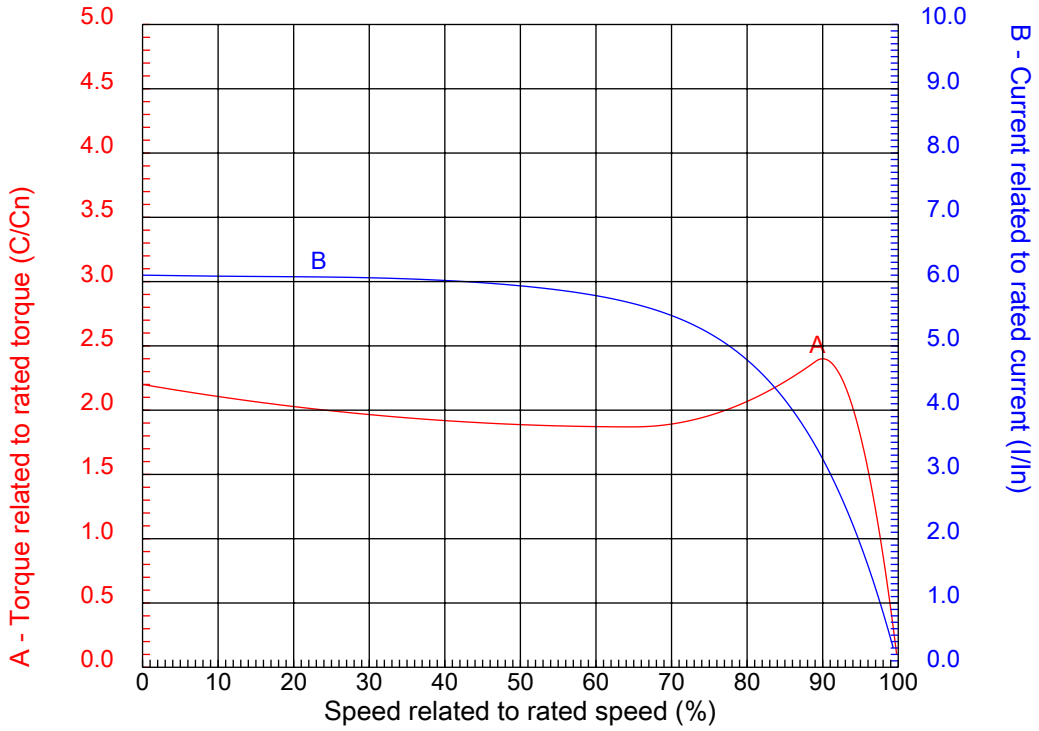

Customer	:	
Product line	:	Three-Phase: W22 IEEE-841™ Petrochem Motors - NEMA Premium® Efficiency

Frame	: 324/6T	Locked rotor current (Il/In)	: 6.1
Output	: 40 HP	Duty cycle	: S1
Frequency	: 60 Hz	Service factor	: 1.25
Full load speed	: 1770 rpm	Design	: B
Voltage	: 460 V	Locked rotor torque	: 220 %
Rated current	: 47.1 A	Breakdown torque	: 240 %
Insulation class	: F		

Notes:
Downloaded from http://dealerselectric.com
Generated for Model #04018ST3QIE324T-W22

Performed by	Checked

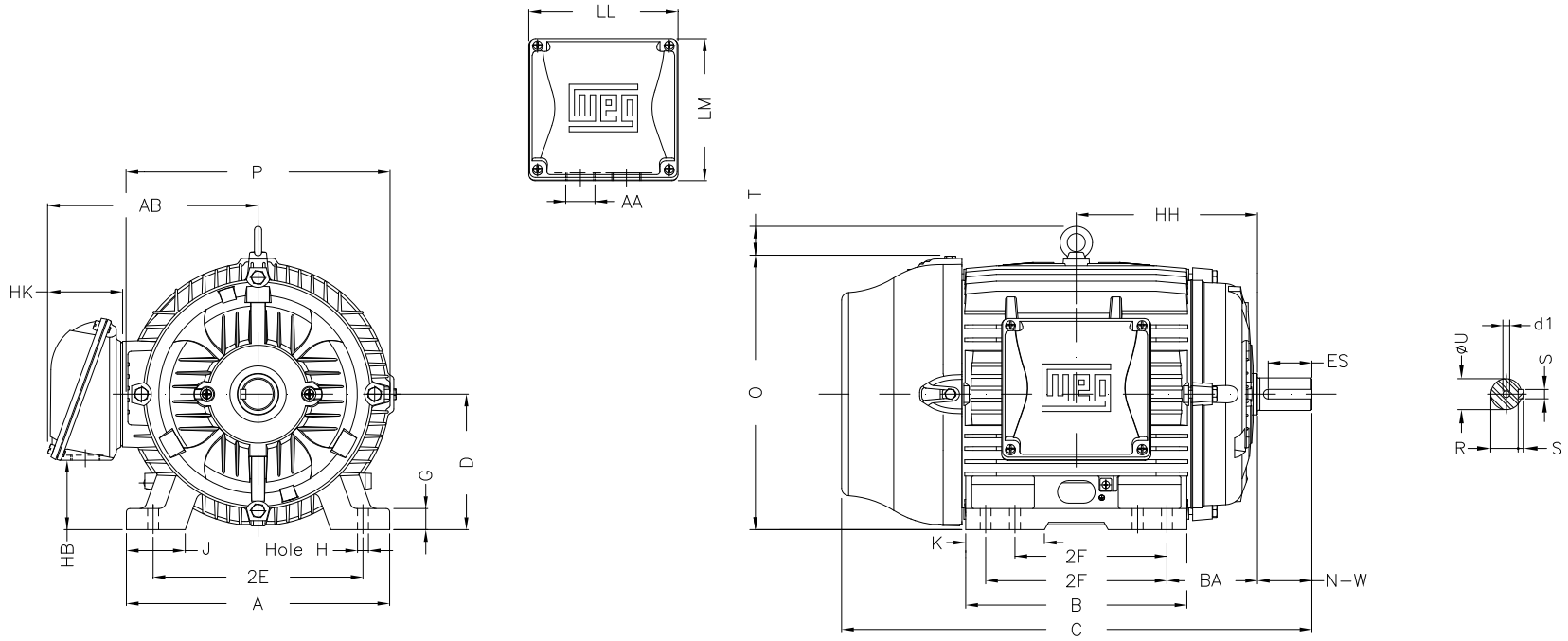

Notes: Downloaded from http://dealerselectric.com
Generated for Model #04018ST3QIE324T-W22

Performed by:

Checked:

Customer:

Three-Phase: W22 IEEE-841™ Petrochem Motors - NEMA Premium® Efficiency

2E 12.500	J 3.189	A 15.157	P 15.827	AB 12.575
2F 10.500/12.000	K 4.055	B 14.567	BA 5.250	U 2.125
N-W 5.250	ES 3.937	S 0.500	R 1.844	depth 0.500
D 8.000	G 1.300	HB 4.811	O 15.953	T 2.441
HF 8.708	HH 11.250	HK 4.705	H 0.657	C 31.116
LL 9.055	LM 8.661	AA NPT 2"	d1 A 4	d2 A 4

Three-phase induction motor

Frame 324/6T - IP55

23-SEP-2016

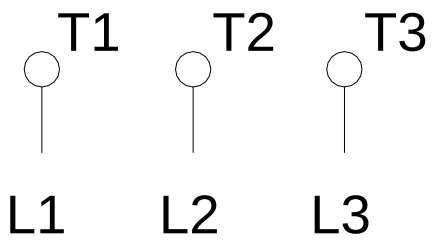

Notes: Downloaded from http://dealerselectric.com
Generated for Model #04018ST3QIE324T-W22

Performed by:

Checked:

Customer:

Three-Phase: W22 IEEE-841™ Petrochem Motors - NEMA Premium® Efficiency

Three-phase induction motor Frame 324/6T - IP55	23-SEP-2016	weg