	Dealers Industrial Equipment	No.:
		Date: 13-SEP-2016

Customer :

TECHNICAL PROPOSAL

Three-phase induction motor - Squirrel cage rotor

Product line	: Three-Phase: W22 IEEE-841™ Petrochem Motors - NEMA Premium® Efficiency
Catalog Number	: 00512ST3HIE215T-W22
List Price	: $1,901

Notes:
Downloaded from http://dealerselectric.com
Generated for Model #00512ST3HIE215T-W22

Performed by:	Checked:

	Dealers Industrial Equipment	No.:
		Date: 13-SEP-2016

DATA SHEET

Three-phase induction motor - Squirrel cage rotor

Customer	:
Product line	: Three-Phase: W22 IEEE-841™ Petrochem Motors - NEMA Premium® Efficiency

Frame	: 213/5T
Output	: 5 HP
Frequency	: 60 Hz
Poles	: 6
Full load speed	: 1170 rpm
Slip	: 2.50 %
Voltage	: 575 V
Rated current	: 5.46 A
Locked rotor current	: 37.2 A
Locked rotor current (Il/In)	: 6.8
No-load current	: 2.76 A
Full load torque	: 22.1 lb.ft
Locked rotor torque	: 170 %
Breakdown torque	: 260 %
Design	: B
Insulation class	: F
Temperature rise	: 80 K
Locked rotor time	: 57 s (hot)
Service factor	: 1.25
Duty cycle	: S1
Ambient temperature	: -20°C - +40°C
Altitude	: 1000 m
Degree of Protection	: IP55
Approximate weight	: 162 lb
Moment of inertia	: 1.4717 sq.ft.lb
Noise level	: 55 dB(A)

	D.E.	N.D.E.
Bearings	6308 C3	6207 C3
Regreasing interval	20000 h	20000 h
Grease amount	11 g	7 g

Load	Power factor	Efficiency (%)
100%	0.76	89.5
75%	0.70	89.5
50%	0.58	88.5

Notes:

Downloaded from http://dealerselectric.com

Generated for Model #00512ST3HIE215T-W22

Performed by	Checked

Dealers Industrial Equipment

No.:

Date: 13-SEP-2016

PERFORMANCE CURVES RELATED TO RATED OUTPUT

Three-phase induction motor - Squirrel cage rotor

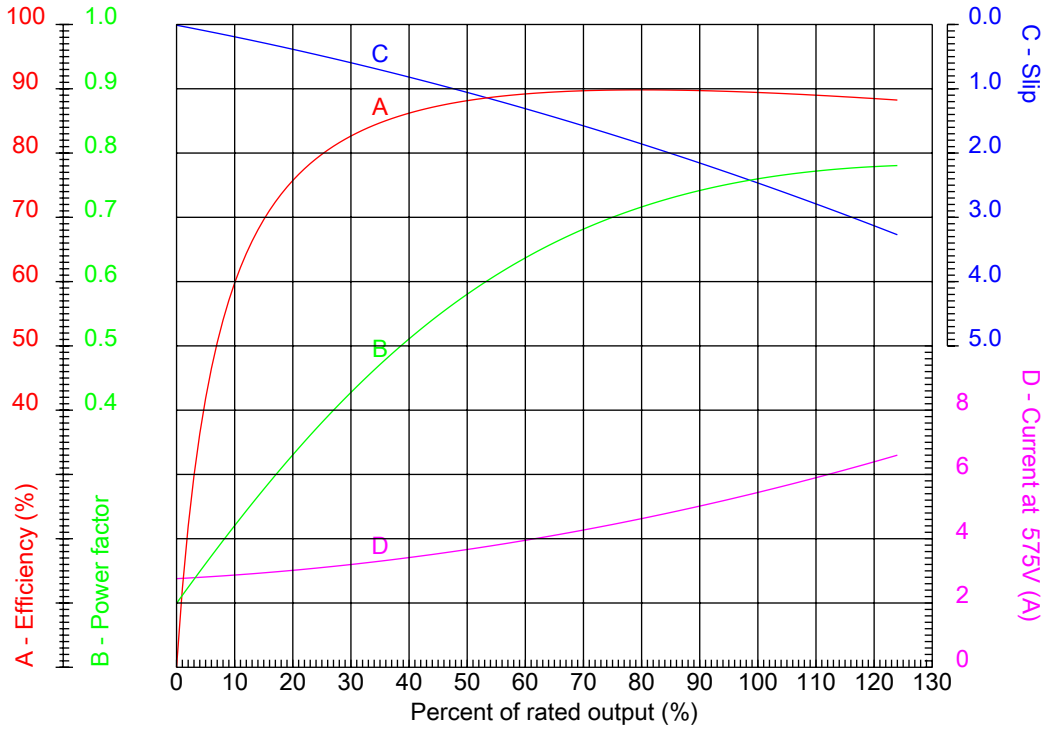

Customer	:
Product line	: Three-Phase: W22 IEEE-841™ Petrochem Motors - NEMA Premium® Efficiency

Frame	: 213/5T	Locked rotor current (Il/In)	: 6.8
Output	: 5 HP	Duty cycle	: S1
Frequency	: 60 Hz	Service factor	: 1.25
Full load speed	: 1170 rpm	Design	: B
Voltage	: 575 V	Locked rotor torque	: 170 %
Rated current	: 5.46 A	Breakdown torque	: 260 %
Insulation class	: F		

Notes:
Downloaded from http://dealerselectric.com
Generated for Model #00512ST3HIE215T-W22

Performed by	Checked

Dealers Industrial Equipment

No.:

Date: 13-SEP-2016

CHARACTERISTIC CURVES RELATED TO SPEED

Three-phase induction motor - Squirrel cage rotor

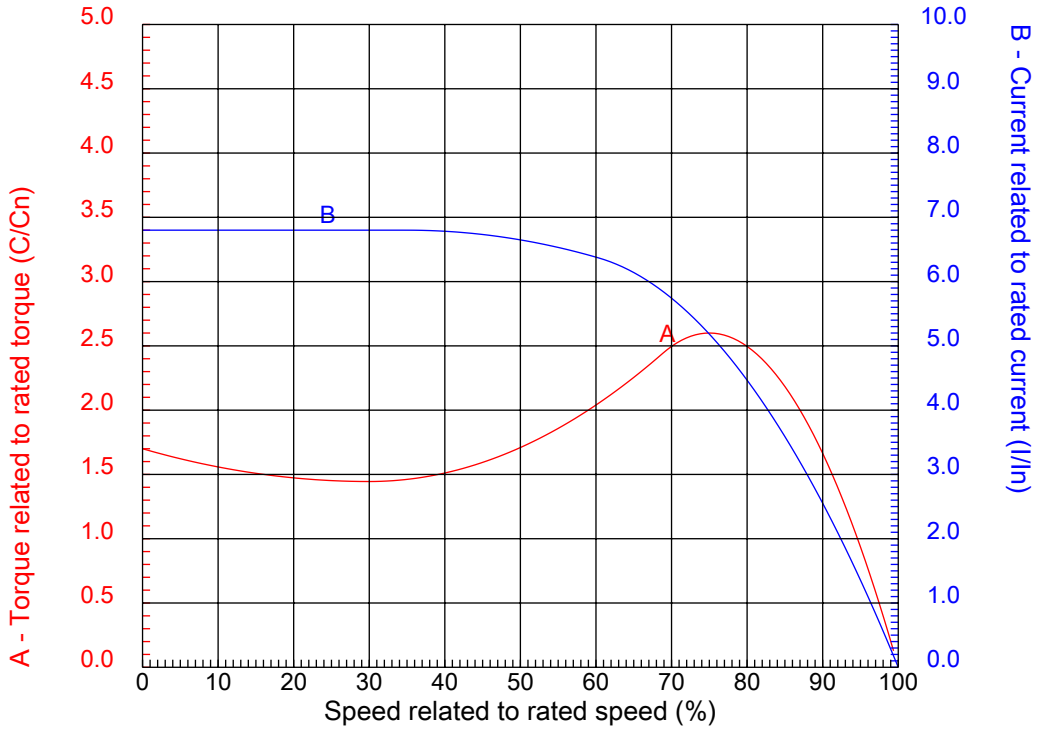

Customer	:	
Product line	:	Three-Phase: W22 IEEE-841™ Petrochem Motors - NEMA Premium® Efficiency

Frame	:	213/5T	Locked rotor current (Il/In)	:	6.8
Output	:	5 HP	Duty cycle	:	S1
Frequency	:	60 Hz	Service factor	:	1.25
Full load speed	:	1170 rpm	Design	:	B
Voltage	:	575 V	Locked rotor torque	:	170 %
Rated current	:	5.46 A	Breakdown torque	:	260 %
Insulation class	:	F			

Notes:
Downloaded from http://dealerselectric.com
Generated for Model #00512ST3HIE215T-W22

Performed by	Checked

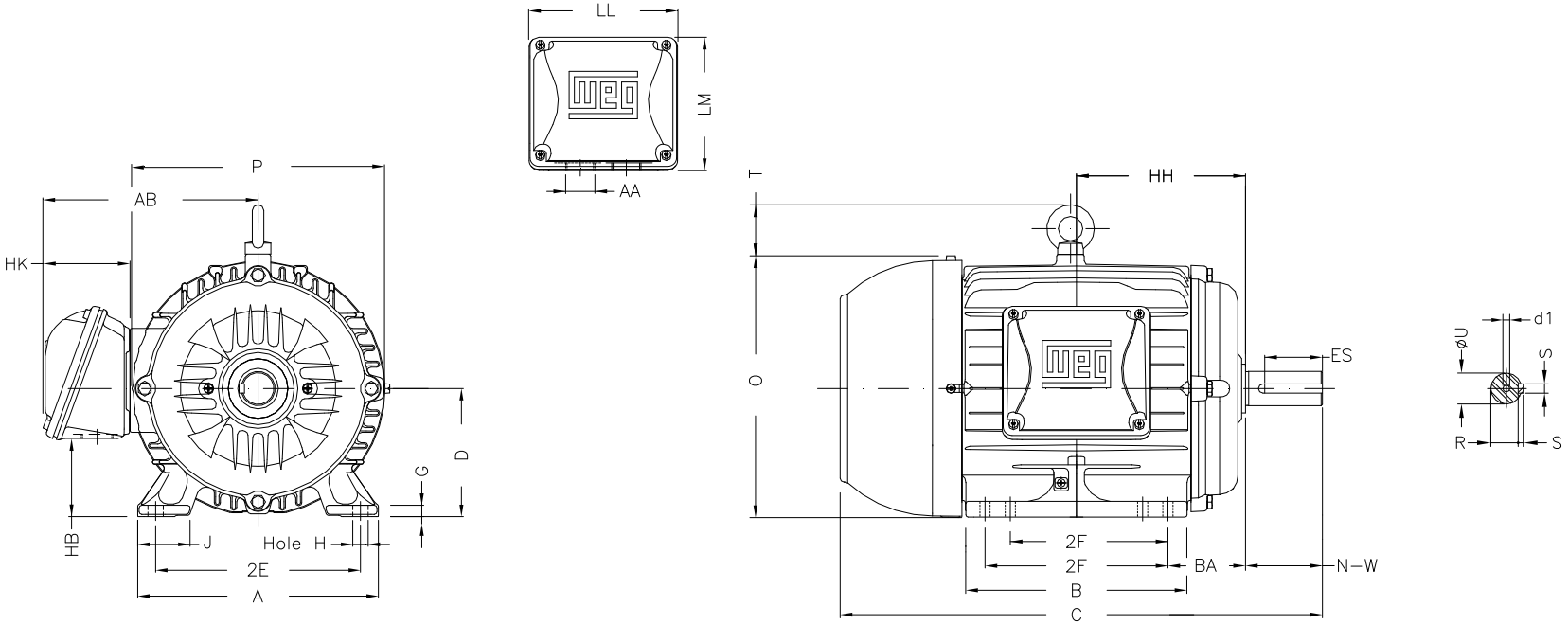

Notes: Downloaded from http://dealerselectric.com
Generated for Model #00512ST3HIE215T-W22

Performed by:

Checked:

Customer:

Three-Phase: W22 IEEE-841™ Petrochem Motors - NEMA Premium® Efficiency

2E 8.500	J 1.772	A 9.764	P 10.669	AB 8.583
2F 5.500/7.000	K 2.165	B 8.858	BA 3.500	U 1.375
N-W 3.375	ES 2.756	S 0.313	R 1.203	depth 0.313
D 5.250	G 0.649	HB 2.985	O 10.841	T 1.772
HF 5.250	HH 7.000	HK 3.150	H 0.406	C 19.517
LL 5.512	LM 5.236	AA NPT 1"	d1 A 4	d2 A 4

Three-phase induction motor
Frame 213/5T - IP55

13-SEP-2016

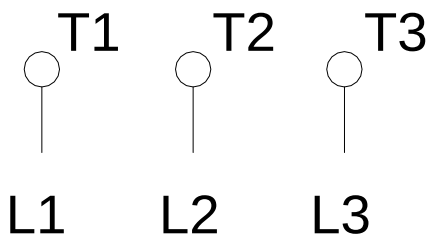

Notes: Downloaded from http://dealerselectric.com
Generated for Model #00512ST3HIE215T-W22

Performed by:

Checked:

Customer:

Three-Phase: W22 IEEE-841™ Petrochem Motors - NEMA Premium® Efficiency

Three-phase induction motor Frame 213/5T - IP55	13-SEP-2016	weg