	Dealers Industrial Equipment	No.:
		Date: 12-SEP-2016

Customer :

TECHNICAL PROPOSAL

Three-phase induction motor - Squirrel cage rotor

Product line	:	Close Coupled Pump : Three-Phase - "JM" Type - ODP - High Efficiency - Vertical Motors
Catalog Number	:	00318OP3E182JMV
List Price	:	$687

Notes:

Downloaded from http://dealerselectric.com

Generated for Model #00318OP3E182JMV

Performed by:	Checked:

	Dealers Industrial Equipment	No.:
		Date: 12-SEP-2016

DATA SHEET

Three-phase induction motor - Squirrel cage rotor

Customer	:
Product line	: Close Coupled Pump : Three-Phase - "JM" Type - ODP - High Efficiency - Vertical Motors

Frame	: 182JM
Output	: 3 HP
Frequency	: 60 Hz
Poles	: 4
Full load speed	: 1760 rpm
Slip	: 2.22 %
Voltage	: 230/460 V
Rated current	: 8.08/4.04 A
Locked rotor current	: 59.8/29.9 A
Locked rotor current (Il/In)	: 7.4
No-load current	: 4.20/2.10 A
Full load torque	: 8.83 lb.ft
Locked rotor torque	: 230 %
Breakdown torque	: 300 %
Design	: B
Insulation class	: F
Temperature rise	: 80 K
Locked rotor time	: 12 s (hot)
Service factor	: 1.15
Duty cycle	: S1
Ambient temperature	: -20°C - +40°C
Altitude	: 1000 m
Degree of Protection	: IP21
Approximate weight	: 47 lb
Moment of inertia	: 0.25415 sq.ft.lb
Noise level	: ---

	D.E.	N.D.E.
Bearings	6207 ZZ	6205 ZZ
Regreasing interval	---	---
Grease amount	---	---

Load	Power factor	Efficiency (%)
100%	0.79	86.5
75%	0.72	86.5
50%	0.60	84.0

Notes:

Downloaded from http://dealerselectric.com

Generated for Model #00318OP3E182JMV

Performed by	Checked

Dealers Industrial Equipment

No.:

Date: 12-SEP-2016

PERFORMANCE CURVES RELATED TO RATED OUTPUT

Three-phase induction motor - Squirrel cage rotor

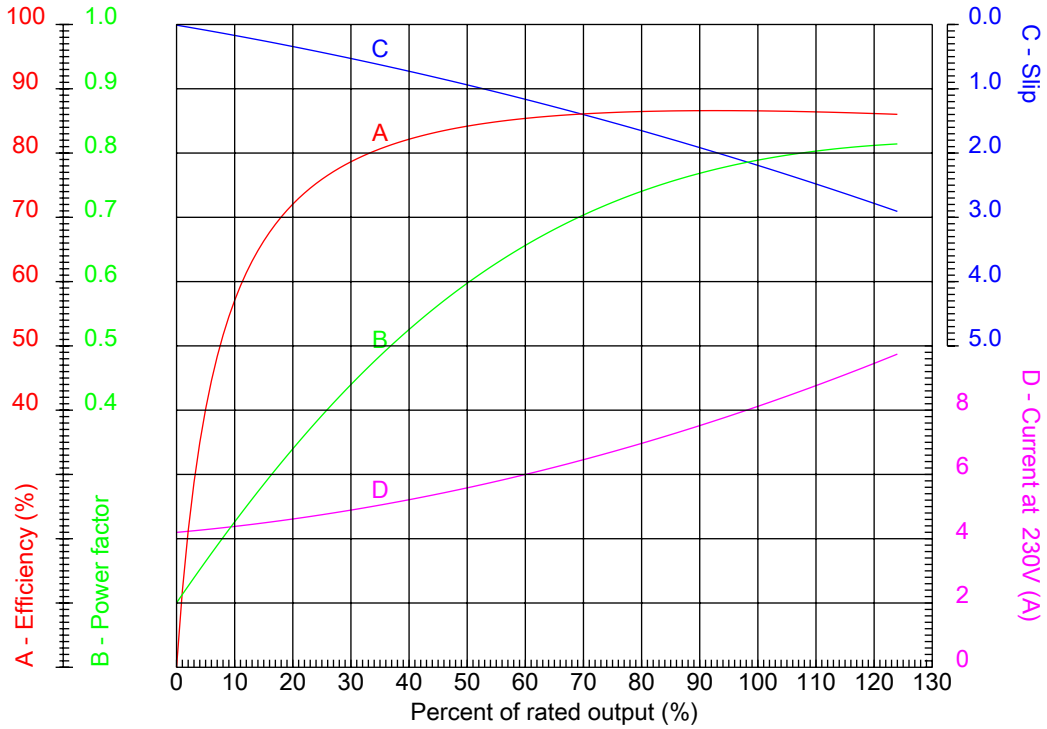

Customer	:	
Product line	:	Close Coupled Pump : Three-Phase - "JM" Type - ODP - High Efficiency - Vertical Motors

Frame	:	182JM	Locked rotor current (Il/In)	:	7.4
Output	:	3 HP	Duty cycle	:	S1
Frequency	:	60 Hz	Service factor	:	1.15
Full load speed	:	1760 rpm	Design	:	B
Voltage	:	230/460 V	Locked rotor torque	:	230 %
Rated current	:	8.08/4.04 A	Breakdown torque	:	300 %
Insulation class	:	F			

Notes:
Downloaded from http://dealerselectric.com
Generated for Model #00318OP3E182JMV

Performed by	Checked

Dealers Industrial Equipment

No.:

Date: 12-SEP-2016

CHARACTERISTIC CURVES RELATED TO SPEED

Three-phase induction motor - Squirrel cage rotor

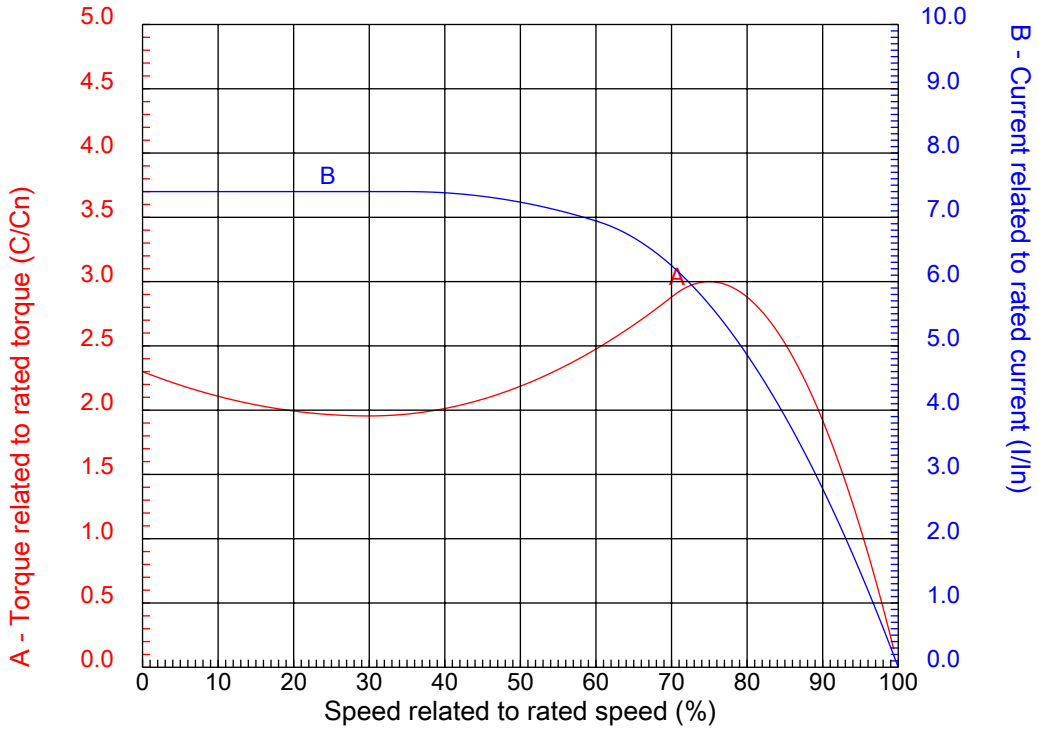

Customer	:	
Product line	:	Close Coupled Pump : Three-Phase - "JM" Type - ODP - High Efficiency - Vertical Motors

Frame	:	182JM	Locked rotor current (Il/In)	:	7.4
Output	:	3 HP	Duty cycle	:	S1
Frequency	:	60 Hz	Service factor	:	1.15
Full load speed	:	1760 rpm	Design	:	B
Voltage	:	230/460 V	Locked rotor torque	:	230 %
Rated current	:	8.08/4.04 A	Breakdown torque	:	300 %
Insulation class	:	F			

Notes:
Downloaded from http://dealerselectric.com
Generated for Model #00318OP3E182JMV

Performed by	Checked

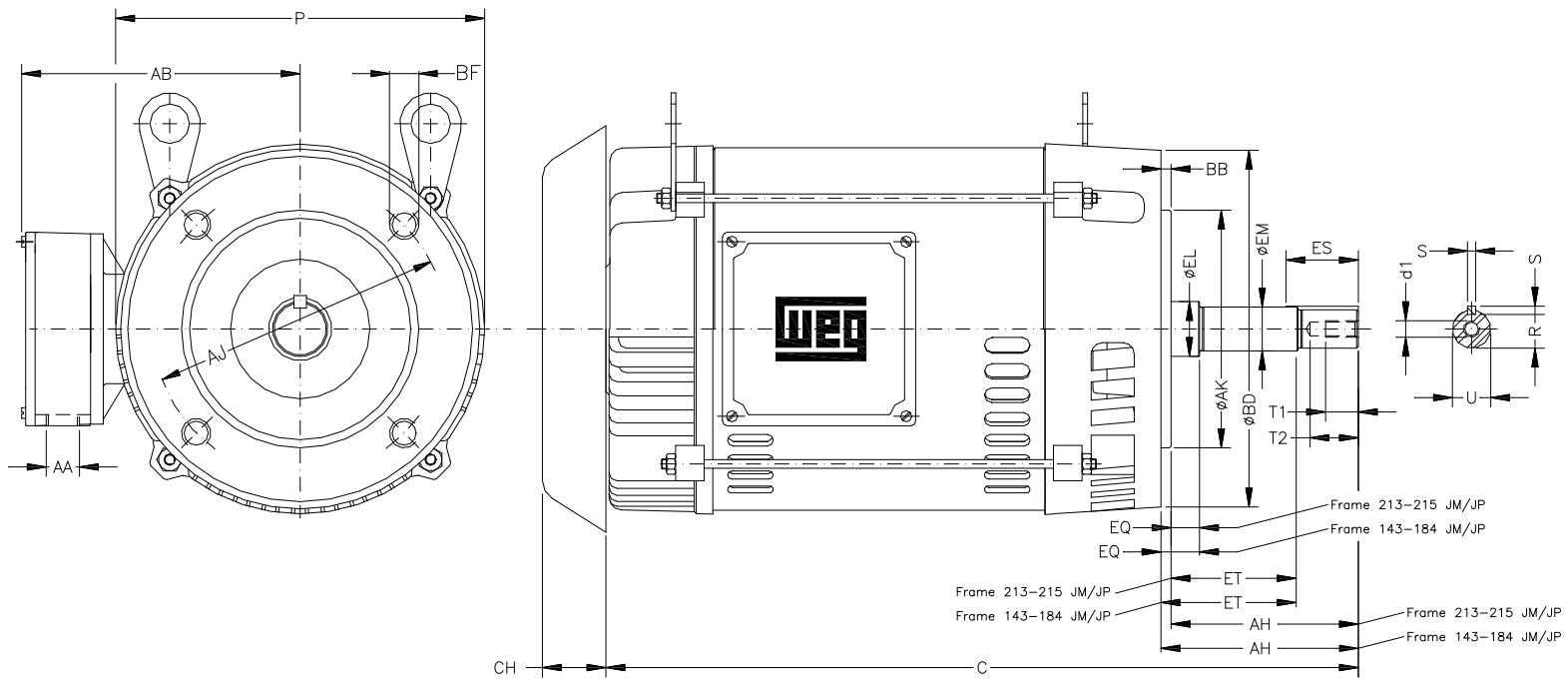

P 7.637	AB 6.574	AA NPT 3/4"	EQ 0.630	ET 2.880
U 0.874	EM 1.000	EL 1.250	S 0.187	EP 1.376
R 0.767	ES 1.575	d1 EUNC 3/8"-16	t1 0.748	t2 1.102
C 14.527	Flange FC-149	AJ 5.874	AK 4.500	BD 6.496
BF UNC 3/8"x16	BB 0.157	AH 4.258		

Notes: Downloaded from http://dealerselectric.com
Generated for Model #00318OP3E182JMV

Performed by:

Checked:

Customer:

Close Coupled Pump : Three-Phase - "JM" Type - ODP - High Efficiency -

Three-phase induction motor

Frame 182JM - IP21

12-SEP-2016

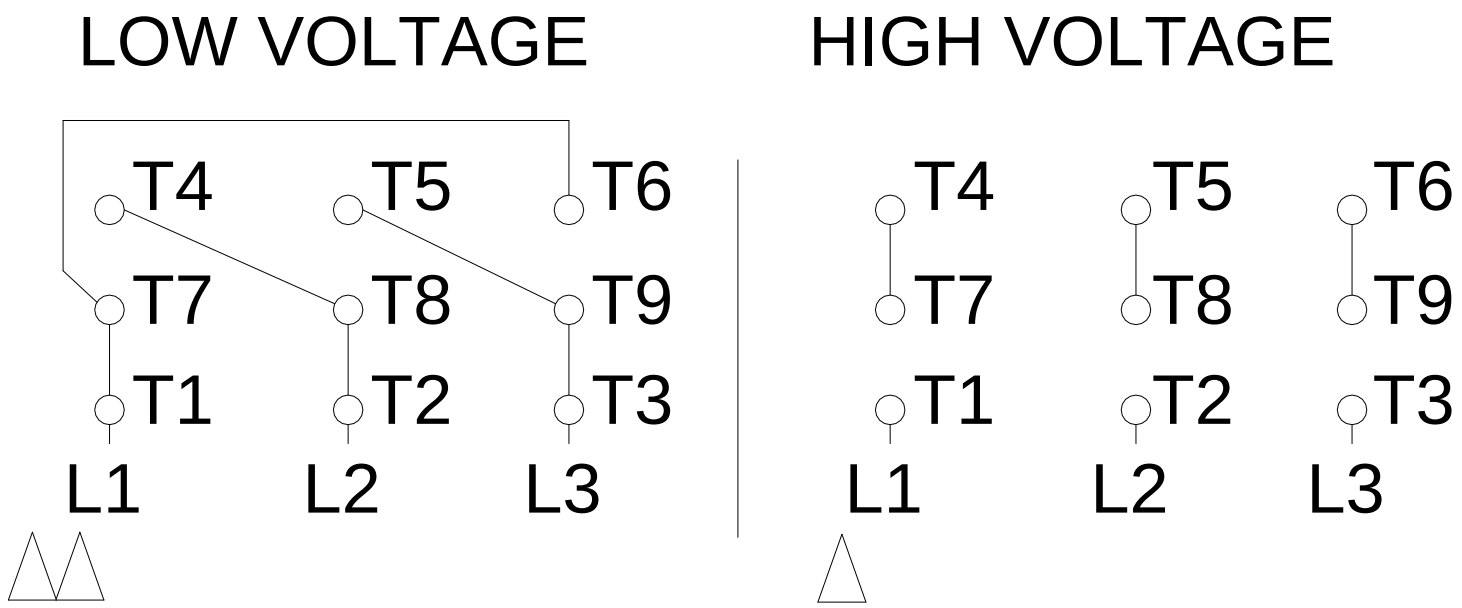

Notes: Downloaded from http://dealerselectric.com
Generated for Model #00318OP3E182JMV

Performed by:

Checked:

Customer:

Close Coupled Pump : Three-Phase - "JM" Type - ODP - High Efficiency -

Three-phase induction motor Frame 182JM - IP21	12-SEP-2016	weg