	Dealers Industrial Equipment	No.:
		Date: 12-SEP-2016

Customer :

TECHNICAL PROPOSAL

Three-phase induction motor - Squirrel cage rotor

Product line	: W01 (Rolled Steel) Close Coupled Pump TEFC - JM Type
Catalog Number	: 00236ET3E145JM-SG
List Price	: $834

Notes:

Downloaded from http://dealerselectric.com

Generated for Model #00236ET3E145JM-SG

Performed by:	Checked:

Dealers Industrial Equipment

No.:

Date: 12-SEP-2016

DATA SHEET
Three-phase induction motor - Squirrel cage rotor

Customer	:	
Product line	:	W01 (Rolled Steel) Close Coupled Pump TEFC - JM Type

Frame	:	143/5JM
Output	:	2 HP
Frequency	:	60 Hz
Poles	:	2
Full load speed	:	3520 rpm
Slip	:	2.22 %
Voltage	:	208-230/460 V
Rated current	:	5.46-4.94/2.47 A
Locked rotor current	:	48.9/24.5 A
Locked rotor current (Il/In)	:	9.9
No-load current	:	2.13/1.06 A
Full load torque	:	2.94 lb.ft
Locked rotor torque	:	250 %
Breakdown torque	:	300 %
Design	:	B
Insulation class	:	F
Temperature rise	:	80 K
Locked rotor time	:	13 s (hot)
Service factor	:	1.15
Duty cycle	:	S1
Ambient temperature	:	-20°C - +40°C
Altitude	:	1000 m
Degree of Protection	:	IP55
Approximate weight	:	40 lb
Moment of inertia	:	0.12790 sq.ft.lb
Noise level	:	68 dB(A)

	D.E.	N.D.E.
Bearings	6206 ZZ	6203 ZZ
Regreasing interval	---	---
Grease amount	---	---

Load	Power factor	Efficiency (%)
100%	0.89	85.5
75%	0.83	85.5
50%	0.73	82.5

Notes:

Downloaded from http://dealerselectric.com

Generated for Model #00236ET3E145JM-SG

Performed by	Checked

Dealers Industrial Equipment

No.:

Date: 12-SEP-2016

PERFORMANCE CURVES RELATED TO RATED OUTPUT

Three-phase induction motor - Squirrel cage rotor

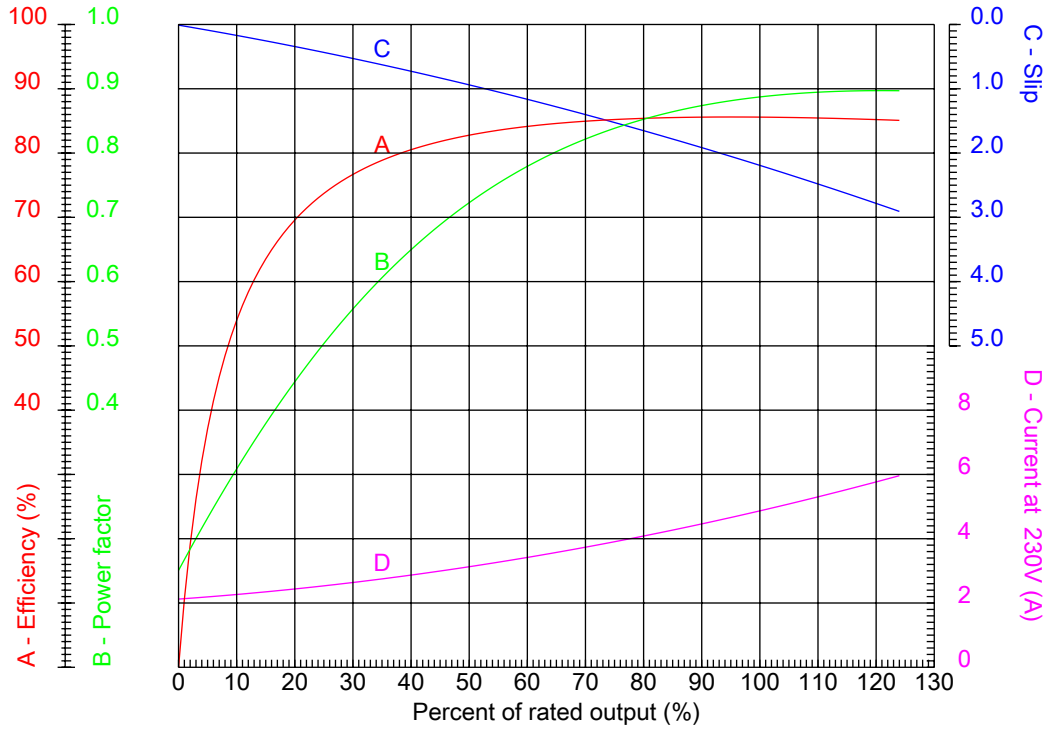

Customer	:	
Product line	:	W01 (Rolled Steel) Close Coupled Pump TEFC - JM Type

Frame	: 143/5JM	Locked rotor current (Il/In)	: 9.9
Output	: 2 HP	Duty cycle	: S1
Frequency	: 60 Hz	Service factor	: 1.15
Full load speed	: 3520 rpm	Design	: B
Voltage	: 208-230/460 V	Locked rotor torque	: 250 %
Rated current	: 5.46-4.94/2.47 A	Breakdown torque	: 300 %
Insulation class	: F		

Notes:
Downloaded from http://dealerselectric.com
Generated for Model #00236ET3E145JM-SG

Performed by	Checked

Dealers Industrial Equipment

No.:

Date: 12-SEP-2016

CHARACTERISTIC CURVES RELATED TO SPEED

Three-phase induction motor - Squirrel cage rotor

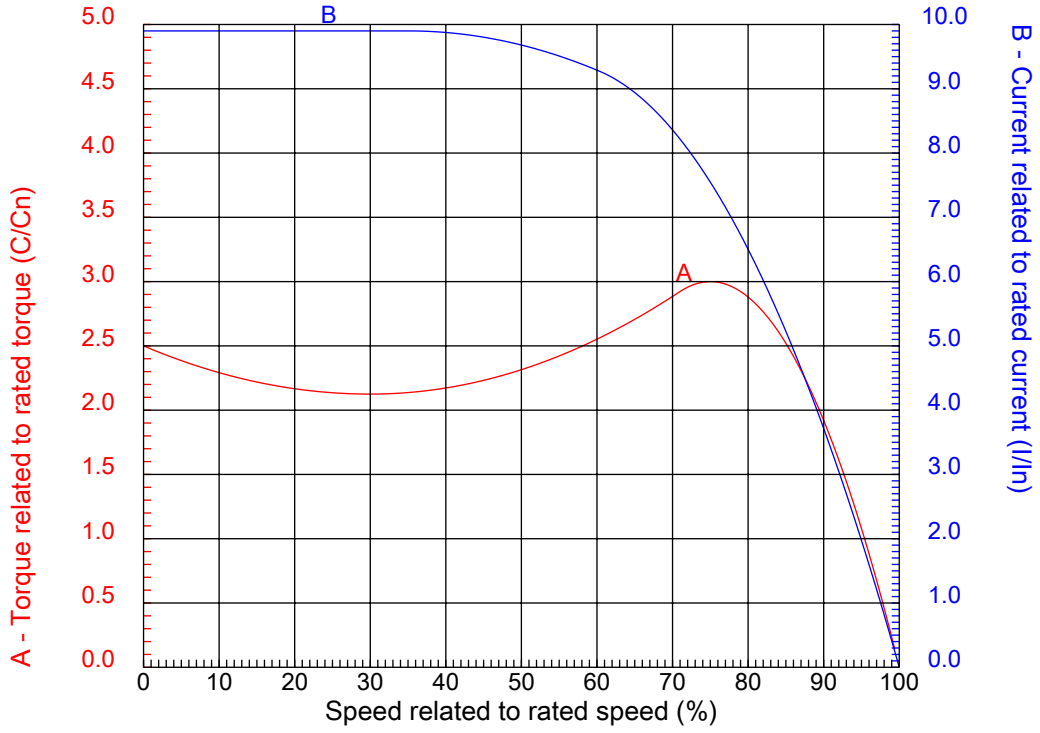

Customer	:		
Product line	:	W01 (Rolled Steel) Close Coupled Pump TEFC - JM Type	

Frame	: 143/5JM	Locked rotor current (Il/In)	: 9.9
Output	: 2 HP	Duty cycle	: S1
Frequency	: 60 Hz	Service factor	: 1.15
Full load speed	: 3520 rpm	Design	: B
Voltage	: 208-230/460 V	Locked rotor torque	: 250 %
Rated current	: 5.46-4.94/2.47 A	Breakdown torque	: 300 %
Insulation class	: F		

Notes:

Downloaded from http://dealerselectric.com

Generated for Model #00236ET3E145JM-SG

Performed by	Checked

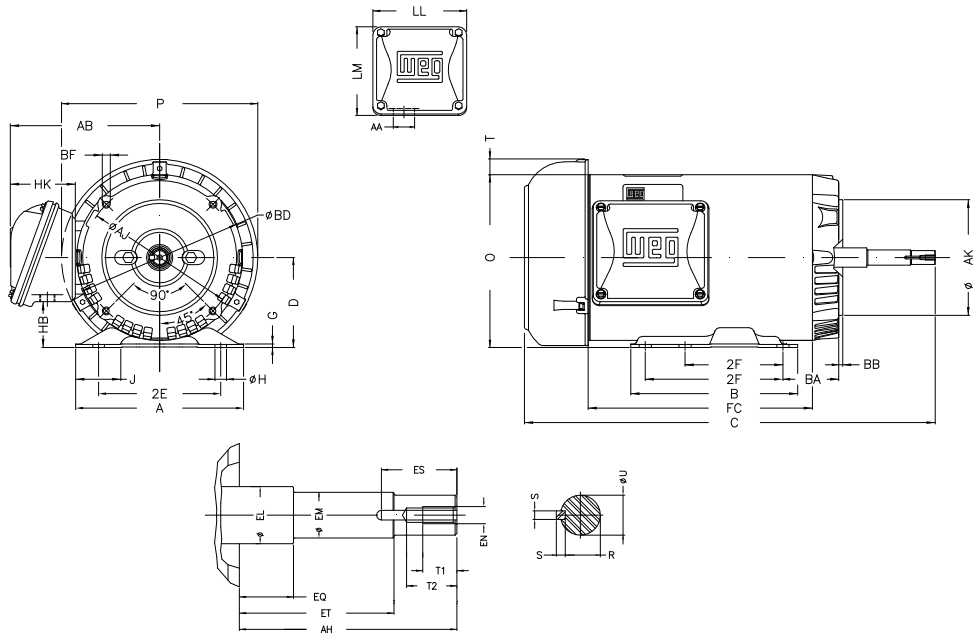

Notes: Downloaded from http://dealerselectric.com
Generated for Model #00236ET3E145JM-SG

2E 5.500	J 1.732	A 6.535	P 7.638	AB 5.873
2F 4.000/5.000	B 6.496	BA 2.750	D 3.500	G 0.120
O 6.724	T 0.603	H 0.343	AA 1.118"	ER 4.258
EQ 0.630	ET 2.880	U 0.8745	EM 1.000	EL 1.156
EP 1.179	ES 1.575	t1 0.787	t2 1.102	C 16.496
CH 1.377	FC 8.661	Flange FC-149	AJ 5.874	AK 4.500
BD 6.450	BF UNC 3/8"x16	BB 0.157	AH 4.267	

Performed by:

Checked:

Customer:

W01 (Rolled Steel) Close Coupled Pump TEFC - JM Type

Three-phase induction motor

Frame 143/5JM - IP55

12-SEP-2016

LOW VOLTAGE

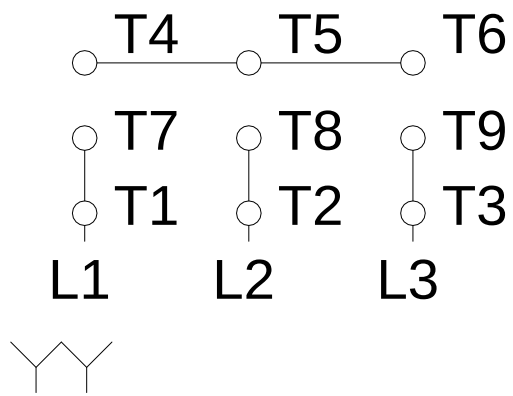

HIGH VOLTAGE

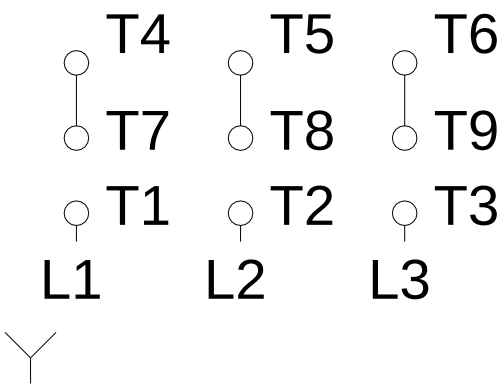

Notes: Downloaded from http://dealerselectric.com
Generated for Model #00236ET3E145JM-SG

Performed by:

Checked:

Customer:

W01 (Rolled Steel) Close Coupled Pump TEFC - JM Type

Three-phase induction motor
Frame 143/5JM - IP55

12-SEP-2016