	Dealers Industrial Equipment	No.:
		Date: 12-SEP-2016

Customer :

TECHNICAL PROPOSAL

Single-phase induction motor - Squirrel cage rotor

Product line	: Single Phase: W01 (Rolled Steel) - TEFC - Standard Efficiency
Catalog Number	: 00156ES1B56-S
List Price	: $432

Notes:
Downloaded from http://dealerselectric.com
Generated for Model #00156ES1B56-S

Performed by:	Checked:

	Dealers Industrial Equipment	No.:
		Date: 12-SEP-2016

DATA SHEET

Single-phase induction motor - Squirrel cage rotor

Customer	:
Product line	: Single Phase: W01 (Rolled Steel) - TEFC - Standard Efficiency

Frame	: 56
Output	: 1.5 HP
Frequency	: 60 Hz
Poles	: 2
Full load speed	: 3500 rpm
Slip	: 2.78 %
Voltage	: 115/208-230 V
Rated current	: 13.2/7.30-6.60 A
Locked rotor current	: 106/52.8 A
Locked rotor current (Il/In)	: 8.0
No-load current	: 4.00/2.00 A
Full load torque	: 2.22 lb.ft
Locked rotor torque	: 240 %
Breakdown torque	: 250 %
Design	: ---
Insulation class	: F
Temperature rise	: 80 K
Locked rotor time	: 7 s (hot)
Service factor	: 1.15
Duty cycle	: S1
Ambient temperature	: -20°C - +40°C
Altitude	: 1000 m
Degree of Protection	: IP55
Approximate weight	: 32 lb
Moment of inertia	: 0.05885 sq.ft.lb
Noise level	: 68 dB(A)

	D.E.	N.D.E.
Bearings	6204 ZZ	6202 ZZ
Regreasing interval	---	---
Grease amount	---	---

Load	Power factor	Efficiency (%)
100%	0.97	75.0
75%	0.95	73.0
50%	0.92	66.0

Notes:

Downloaded from http://dealerselectric.com

Generated for Model #00156ES1B56-S

Performed by	Checked

Dealers Industrial Equipment

No.:

Date: 12-SEP-2016

PERFORMANCE CURVES RELATED TO RATED OUTPUT

Single-phase induction motor - Squirrel cage rotor

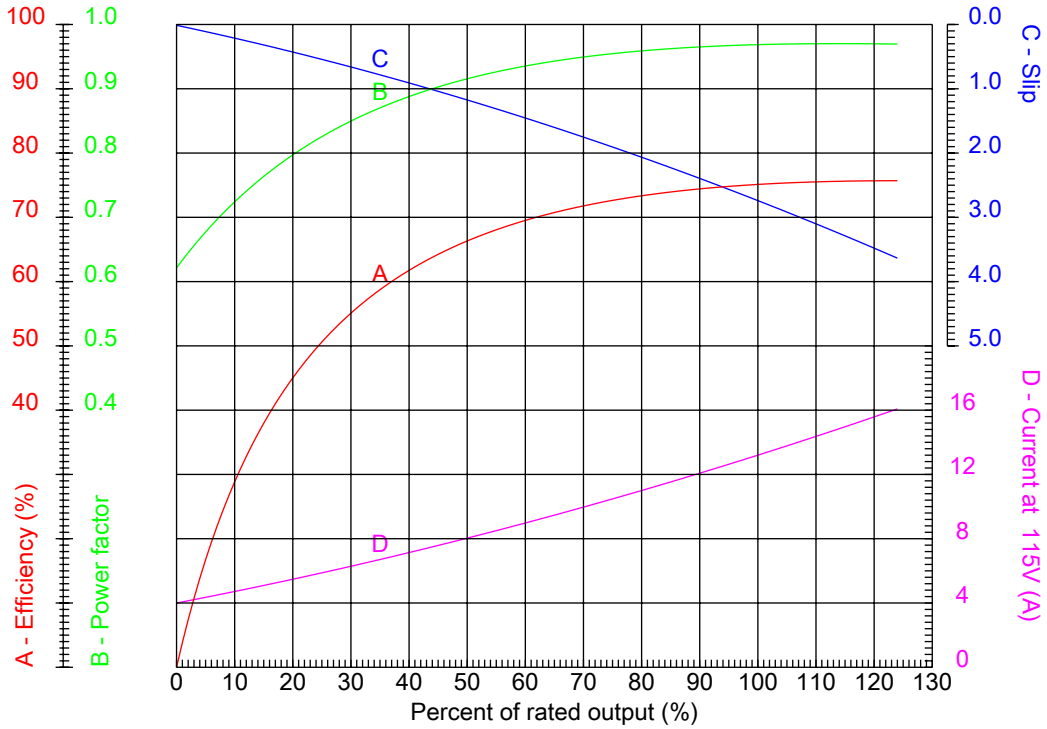

Customer	:
Product line	: Single Phase: W01 (Rolled Steel) - TEFC - Standard Efficiency

Frame	: 56	Locked rotor current (Il/In)	: 8.0
Output	: 1.5 HP	Duty cycle	: S1
Frequency	: 60 Hz	Service factor	: 1.15
Full load speed	: 3500 rpm	Design	: ---
Voltage	: 115/208-230 V	Locked rotor torque	: 240 %
Rated current	: 13.2/7.30-6.60 A	Breakdown torque	: 250 %
Insulation class	: F		

Notes:
Downloaded from http://dealerselectric.com
Generated for Model #00156ES1B56-S

Performed by	Checked

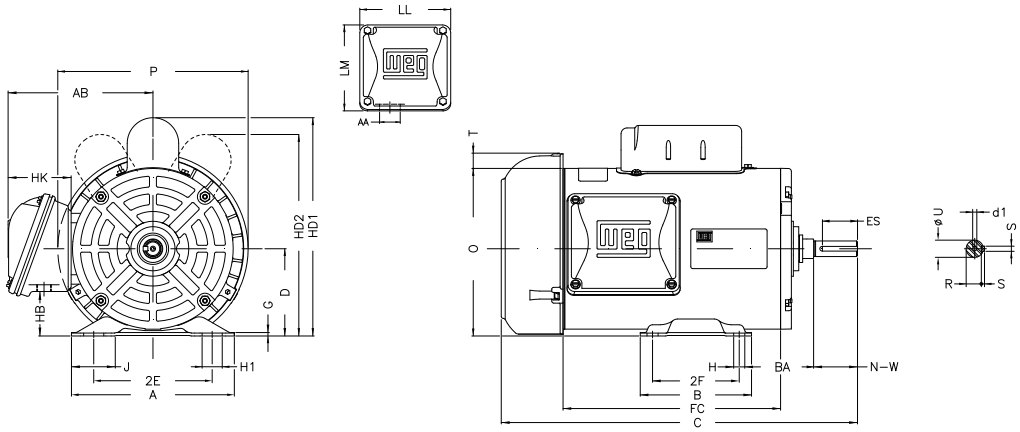

Notes: Downloaded from http://dealerselectric.com
Generated for Model #00156ES1B56-S

P 7.638	AB 5.882	J 1.732	2E 4.874	A 6.535
H 0.343	G 0.120	HB 1.783	HK 2.638	XO 0.603
O 6.724	FC 8.268	2F 3.000	B 4.016	C 13.902
BA 2.750	N-W 1.874	ES 1.417	d1 A 3,15	S 0.187
U 0.625	AA 0.881"	depth 0.187	R 0.517	LL 4.543
LM 4.106	BB 0.603	D 3.500	CH 1.377	HD2 8.150
HC2 4.650				

Performed by:

Checked:

Customer:

Single Phase: W01 (Rolled Steel) - TEFC - Standard Efficiency

Single-phase induction motor

Frame 56 - IP55

12-SEP-2016