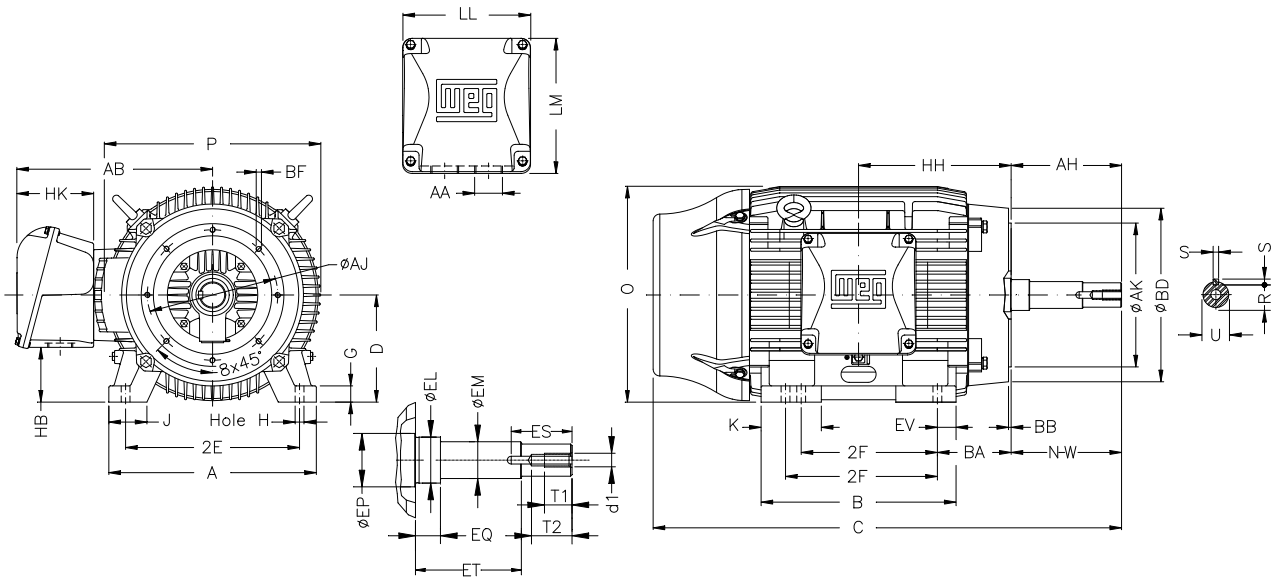

2E 14.016	J 3.150	A 17.165	P 17.914	AB 16.016
2F 11.260/12.244	K 4.138	B 16.220	BA 5.875	D 9.000
G 1.480	O 17.716	H 0.660	AA NPT 3"	EQ 0.630
ET 3.006	U 1.249	EM 1.375	EL 1.750	EP 2.756
ES 2.480	t1 0.984	t2 1.496	C 33.031	d1 EUNC 1/2"-13
HH 11.988	HK 6.024	HB 4.251	LL 10.591	LM 11.267
S 0.250	R 1.110	Flange FC-279	AJ 11.000	AK 12.500
BD 15.562	BF UNC 5/8"x11	BB 0.248	AH 5.250	

Notes: Downloaded from http://dealerselectric.com
Generated for Model #05012ET3E365JM-W22

Performed by:

Checked:

Customer:

Close Coupled Pump: Three-Phase - W22 "JM" Type - TEFC - NEMA Premium

Three-phase induction motor

Frame 364/5JM - IP55

23-SEP-2016