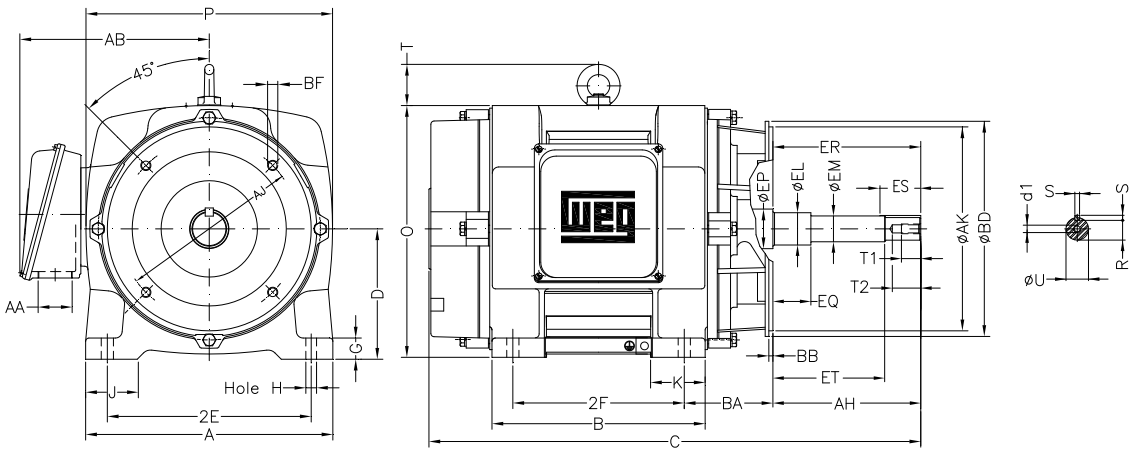

2E 10.000	A 12.130	2F 10.000	B 11.732	J 2.520
BA 4.500	D 6.220	K 2.560	G 0.787	O 12.204
P 11.812	T 2.165	AB 10.079	H 0.531	AA NPT 1 1/2"
ER 5.250	EQ 0.630	ET 3.006	U 1.249	EM 1.375
EL 1.750	S 0.250	EP 1.750	R 1.110	ES 2.559
d1 EUNC 1/2"-13	t1 0.984	t2 1.496	C 23.902	Flange FC-184
AJ 7.250	AK 8.500	BD 8.858	BF UNC 1/2"x13	BB 0.250
AH 5.250				

Notes: Downloaded from http://dealerselectric.com
Generated for Model #02536OP3H256JM

Performed by:

Checked:

Customer:

Close Coupled Pump : Three-Phase - "JM" Type - ODP - High Efficiency

Three-phase induction motor

Frame 256JM - IP23

23-SEP-2016