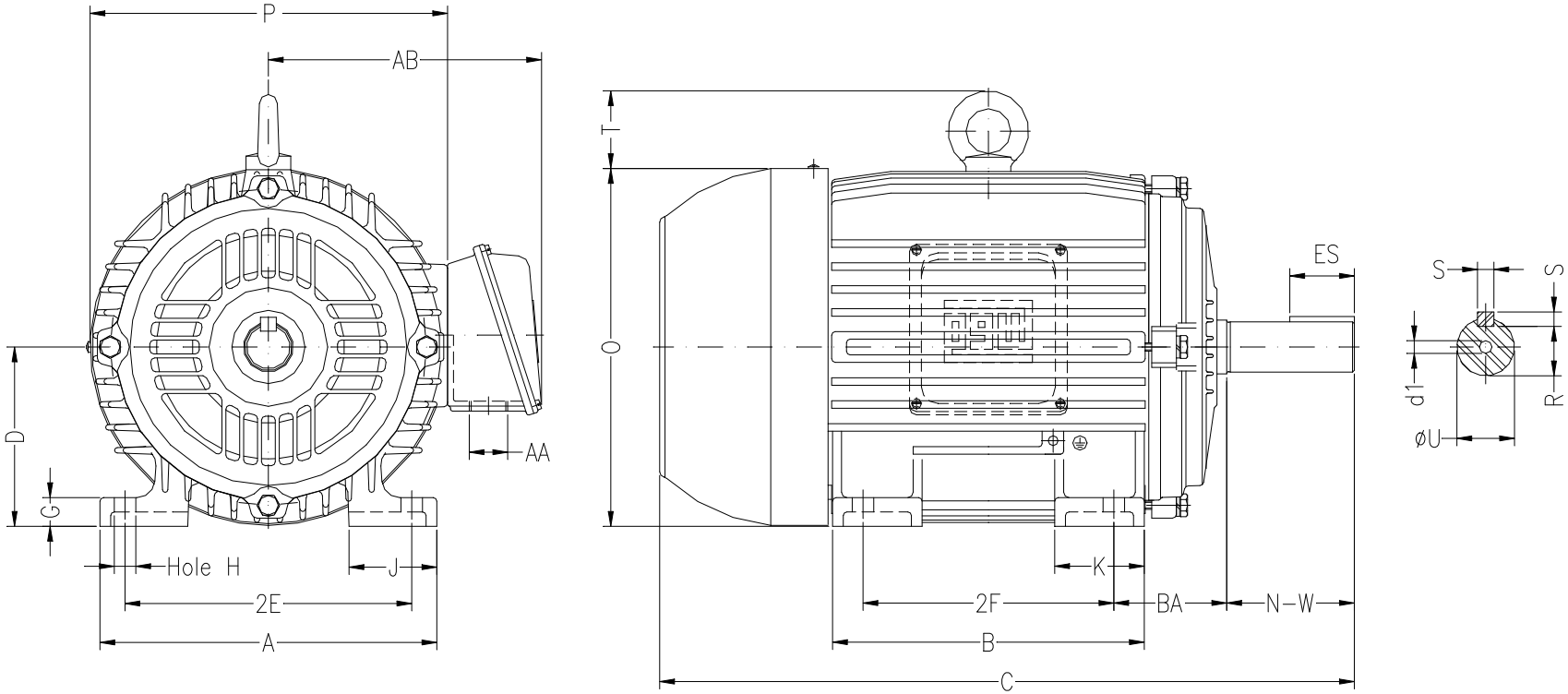

Notes: Downloaded from http://dealerselectric.com
Generated for Model #02012ES3EOW286T

Performed by:

Checked:

Customer:

Oil Well Pumping : High Slip - NEMA Design "D" - TEFC (IP55)

2E 11.000	A 13.780	2F 11.000	B 13.071	BA 4.750
J 3.150	K 2.953	P 14.094	ES 3.149	depth 0.500
S 0.500	N-W 4.622	U 1.875	R 1.594	AB 10.866
D 7.000	G 1.016	O 14.067	T 2.087	H 0.531
C 27.929	AA NPT 1 1/2"	d1 A 4	d2 A 4	

Three-phase induction motor

Frame 286T - IP55

23-SEP-2016