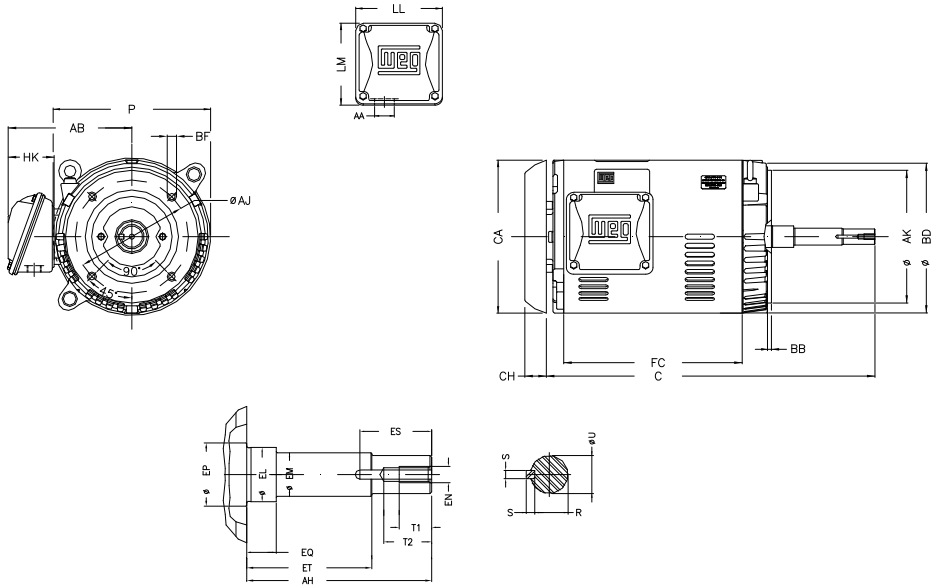

Notes: Downloaded from http://dealerselectric.com
Generated for Model #01536OT3E215JPV-S

Performed by:

Checked:

Customer:

Close Coupled Pump: Three-Phase - W01 (Rolled Steel) "JP" Type - ODP -

P 9.846	AB 7.973	AA 1.377"	ER 8.149	EQ 2.374
ET 5.886	U 1.250	EM 1.375	EL 1.750	EP 1.769
ES 2.560	t1 0.984	t2 1.496	C 22.756	FC 11.417
Flange FC-184	AJ 7.250	AK 8.500	BD 9.401	BF UNC 1/2"x13
BB 0.250	AH 8.130			

Three-phase induction motor
Frame 213/5JP - ODP

23-SEP-2016