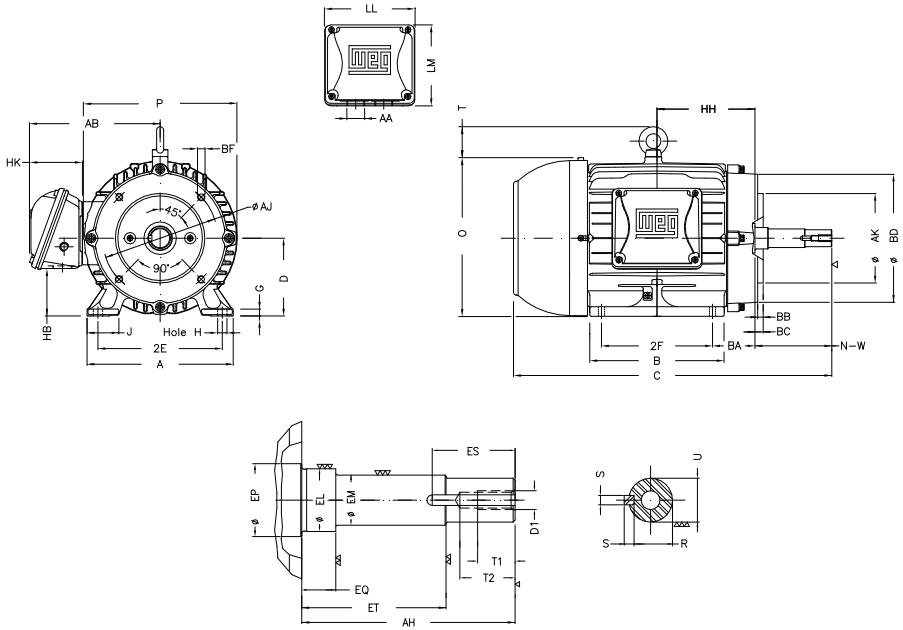

2E 8.500	J 1.772	A 9.764	P 10.669	AB 8.583
2F 5.500	K 2.165	B 7.362	BA 3.500	D 5.250
G 0.669	O 10.841	T 1.772	H 0.406	AA NPT 1"
EQ 0.630	ET 2.880	U 0.874	EM 1.000	EL 1.250
EP 1.770	ES 1.575	t1 0.748	t2 1.102	C 18.931
d1 EUNC 3/8"-16	HH 6.250	HK 3.150	HB 2.985	LL 5.512
LM 5.236	S 0.187	R 0.768	Flange FC-184	AJ 7.252
AK 8.500	BD 8.858	BF UNC 1/2"x13	BB 0.248	AH 4.258

Notes: Downloaded from http://dealerselectric.com
Generated for Model #00736EP3E213JM-W22

Performed by:

Checked:

Customer:

Close Coupled Pump: Three-Phase - W22 "JM" Type - TEFC - High Efficiency

Three-phase induction motor

Frame 213JM - IP55

13-SEP-2016