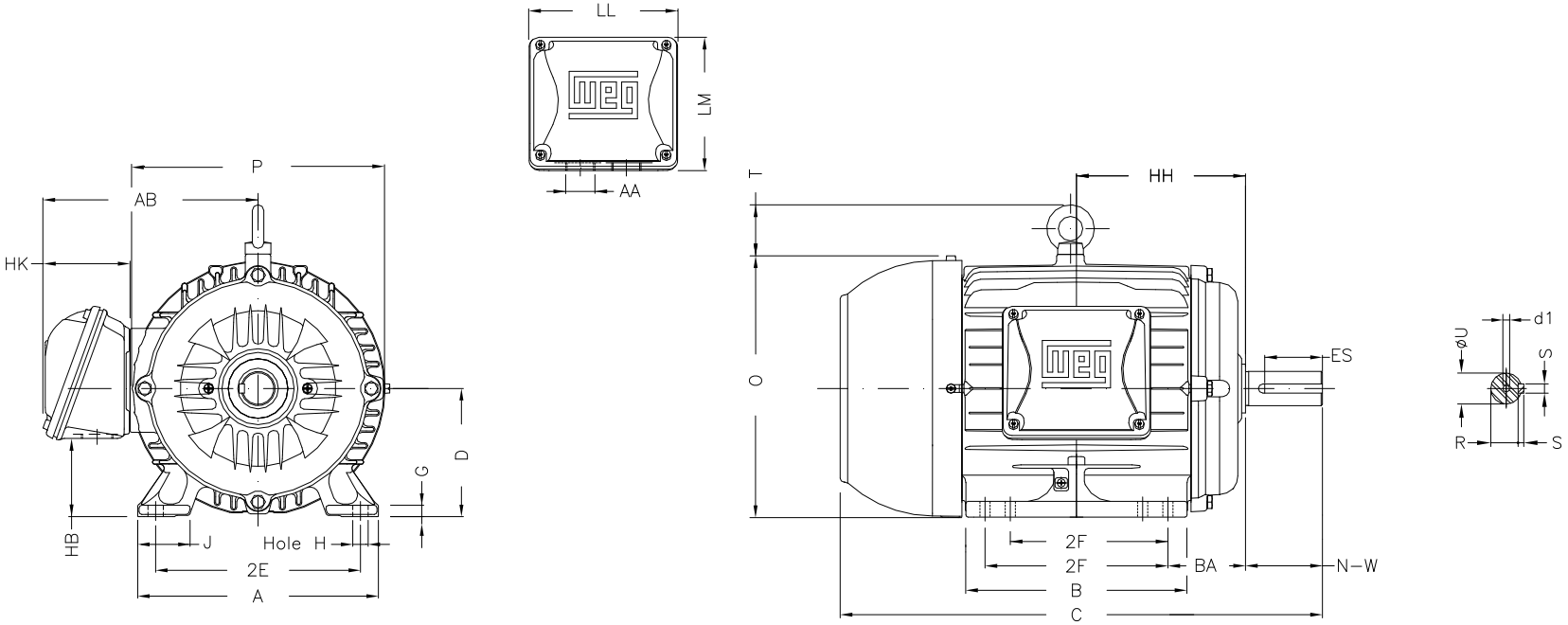


Notes: Downloaded from http://dealerselectric.com
Generated for Model #00512ST3HIE215T-W22

Performed by:

Checked:

Customer:

Three-Phase: W22 IEEE-841™ Petrochem Motors - NEMA Premium® Efficiency

| | | | | |
|---|---|---|---|---|
| 2E<br>8.500 | J<br>1.772 | A<br>9.764 | P<br>10.669 | AB<br>8.583 |
| 2F<br>5.500/7.000 | K<br>2.165 | B<br>8.858 | BA<br>3.500 | U<br>1.375 |
| N-W<br>3.375 | ES<br>2.756 | S<br>0.313 | R<br>1.203 | depth<br>0.313 |
| D<br>5.250 | G<br>0.649 | HB<br>2.985 | O<br>10.841 | T<br>1.772 |
| HF<br>5.250 | HH<br>7.000 | HK<br>3.150 | H<br>0.406 | C<br>19.517 |
| LL<br>5.512 | LM<br>5.236 | AA<br>NPT 1" | d1<br>A 4 | d2<br>A 4 |

Three-phase induction motor
Frame 213/5T - IP55

13-SEP-2016