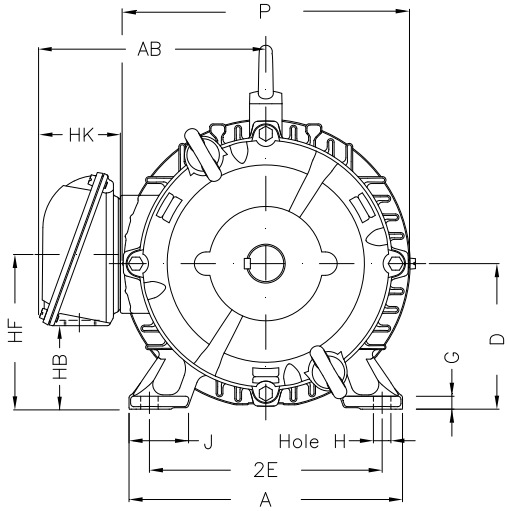

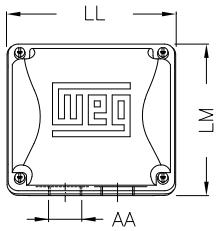

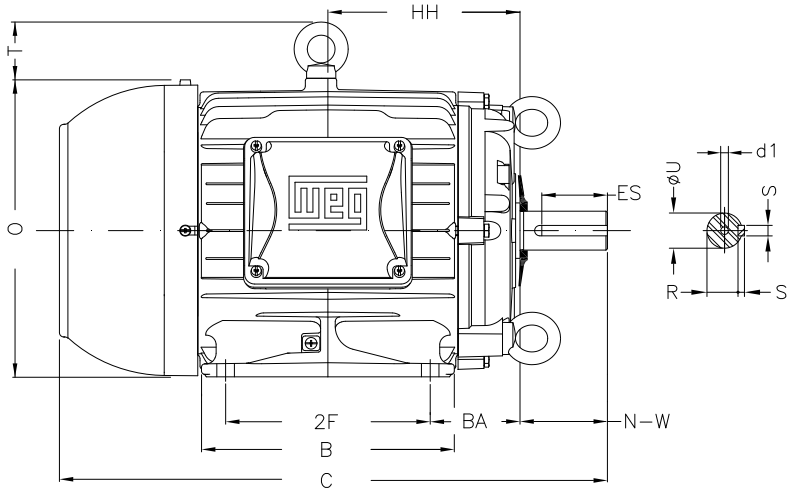

Notes: Downloaded from http://dealerselectric.com
Generated for Model #00318ET3PCT182TF1-W2

Performed by:

Checked:

Customer:

W22 Cooling Tower Motors: NEMA Premium - TEFC

2E 7.500	J 1.614	A 8.661	P 8.504	AB 7.565
2F 4.500	B 5.945	BA 2.750	U 1.125	N-W 2.750
ES 1.969	S 0.250	R 0.984	depth 0.250	D 4.500
G 0.394	HB 2.236	O 9.343	T 1.772	HF 4.500
HH 5.000	HK 3.150	H 0.406	C 14.860	LL 5.512
LM 5.236	AA NPT 1"	d1 A 4	d2 A 4	

Three-phase induction motor
Frame 182T - IP55

12-SEP-2016