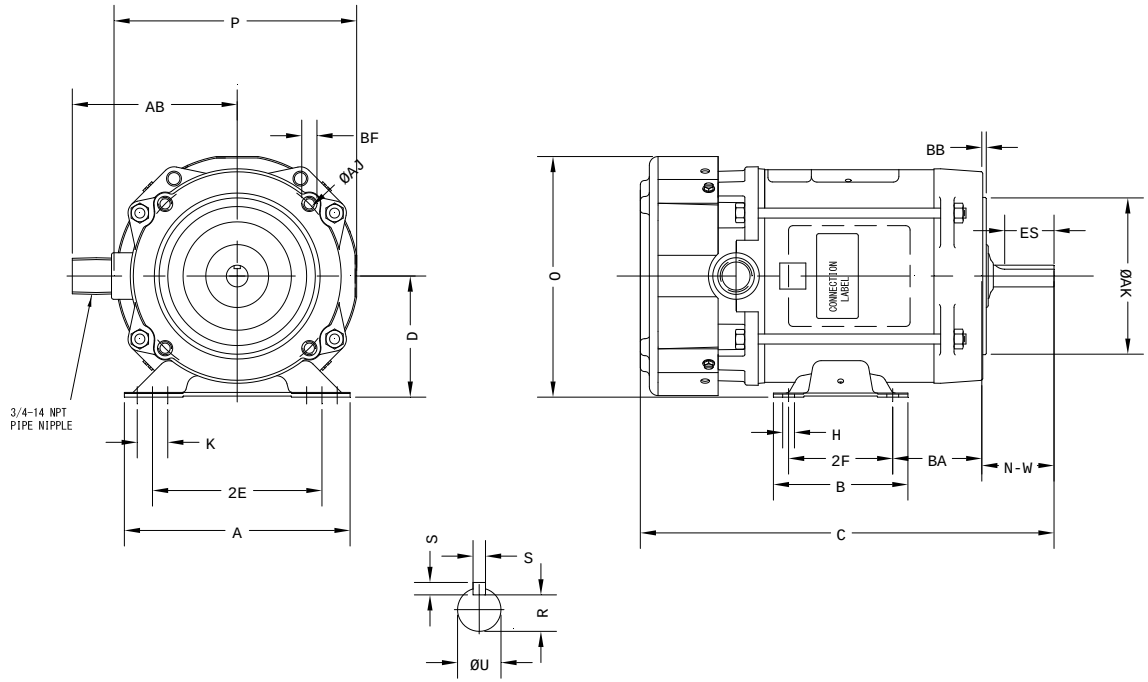

Notes: Downloaded from http://dealerselectric.com
Generated for Model #00236XS1C56HC

Performed by:

Checked:

Customer:

Single-Phase: Fractional Explosion Proof Motors

2E 4.880	A 6.500	P 6.980	AB 4.500	B 5.880
BA 2.750	U 0.6250	N-W 1.880	ES 1.380	S 0.190
R 0.517	D 3.500	O 6.920	H 0.340	C 14.540
d1 SEM	2F 3.000/5.000	Flange FC-149	AJ 5.880	AK 4.500
BD 6.000	BF UNC 3/8"x16-2B	BB 0.160	AH 2.060	

Single-phase induction motor

Frame 56H - IP55

12-SEP-2016