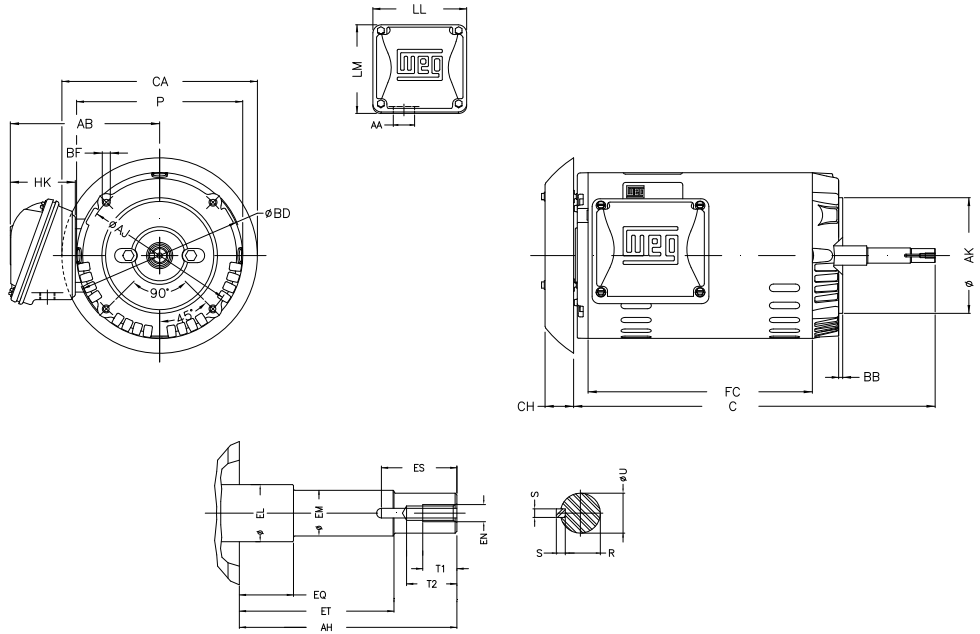

Notes: Downloaded from http://dealerselectric.com
Generated for Model #00118OT3E143JMV-S

Performed by:

Checked:

Customer:

Close Coupled Pump: Three-Phase - W01 (Rolled Steel) "JM" Type - ODP -

P 6.456	AB 5.873	AA 1.118"	ER 4.258	EQ 0.630
ET 2.880	U 0.8745	EM 1.000	EL 1.156	EP 1.179
ES 1.575	t1 0.787	t2 1.102	C 13.701	FC 7.874
Flange FC-149	AJ 5.874	AK 4.500	BD 6.450	BF UNC 3/8"x16
BB 0.157	AH 4.267			

Three-phase induction motor

Frame 143/5JM - ODP

12-SEP-2016