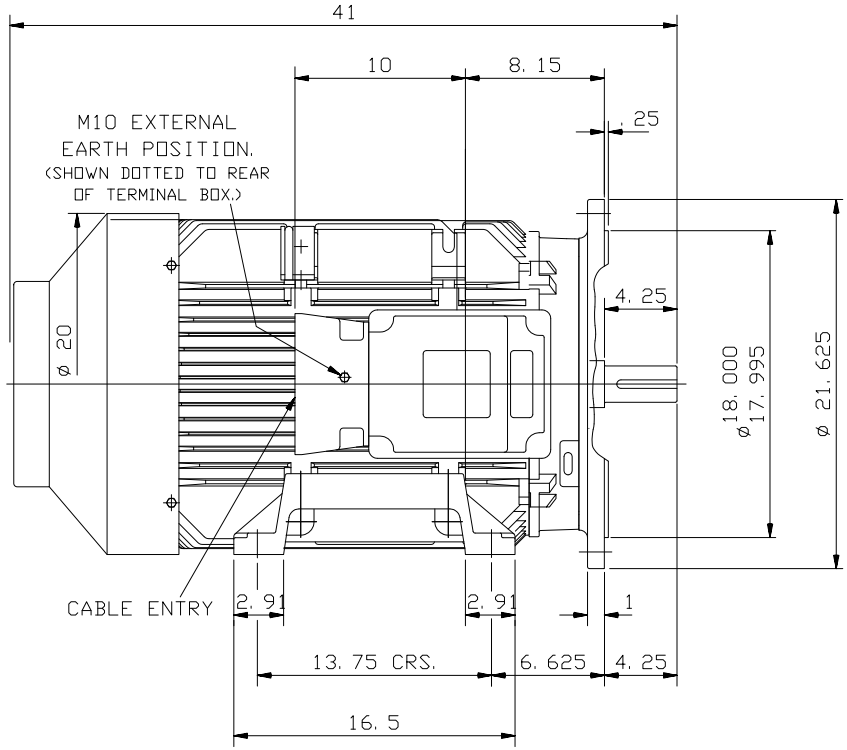

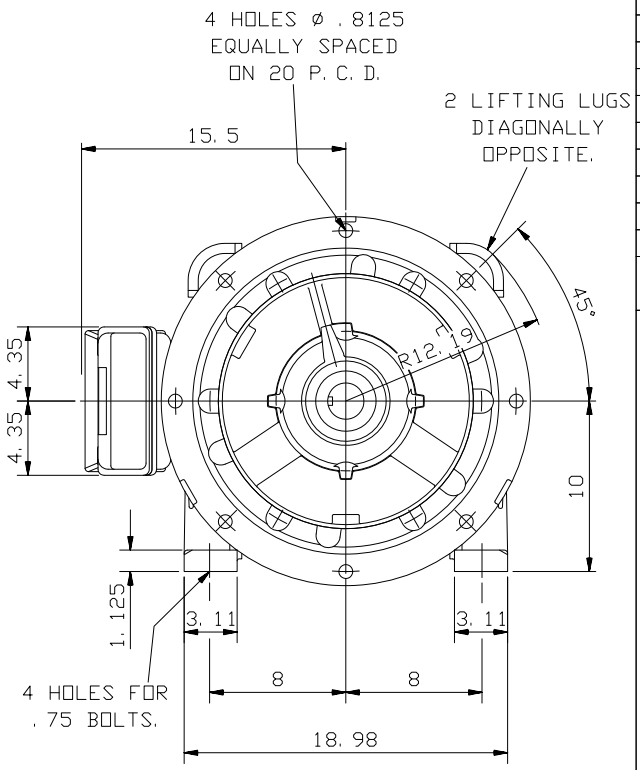

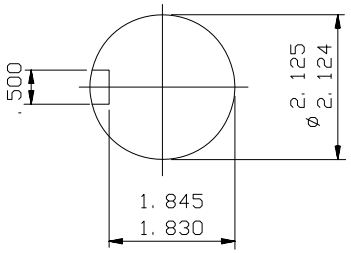

ENLARGED VIEW OF
SHAFT EXTENSION
(SCALE 1:2)

NOTE: -
TERMINAL BOX CAN BE TOP OR RIGHT
HAND SIDE MOUNTED BY REFITTING FEET
90° IN APPROPRIATE DIRECTION.
CABLE ENTRY CAN BE SUPPLIED IN
ANY ONE OF FOUR POSITIONS AT
90° INTERVALS.

CUSTOMER		
ORDER No.		
SERIAL No.		
FRAME SIZE		
kW	RPM.	
Hz	PHASE 3	
VOLTS	POLES	
BRGS.	DE.	NDE.
MOTOR NETT. WT.		Kg.
INSULATION CLASS		
TEMPERATURE RISE	°C	
DESIGN AMBIENT TEMPERATURE		°C
HEATER WATTS & VOLTS	WATTS,	VOLTS
REMARKS		

ALL DIMENSIONS IN MILLIMETRES

FIRST ANGLE PROJECTION

BROOK CROMPTON

NOTE !
2.5 ENDPLAY WILL BE PROVIDED FOR ENDTHRUST PROTECTION WHEN CUSTOMERS NOTIFY US OF THEIR INTENTION TO USE RIGID COUPLINGS AND DRIVEN MACHINES WITHOUT ENDPLAY.

OUTLINE DIMENSIONS OF STANDARD FOOT/D FLANGE MOUNTED INCH A.C.
MOTOR TO NEMA STD. MG1. TOTALLY ENCLOSED FAN COOLED.
FITTED WITH SIDE MOUNTED TERMINAL BOX
FRAME SIZE: W-DF405T-E (2 POLE ONLY.)

SCALE	1:8	DATE	DRG. No.
DRAWN			
CHECKED			
APPROVED			REVISION: DATE