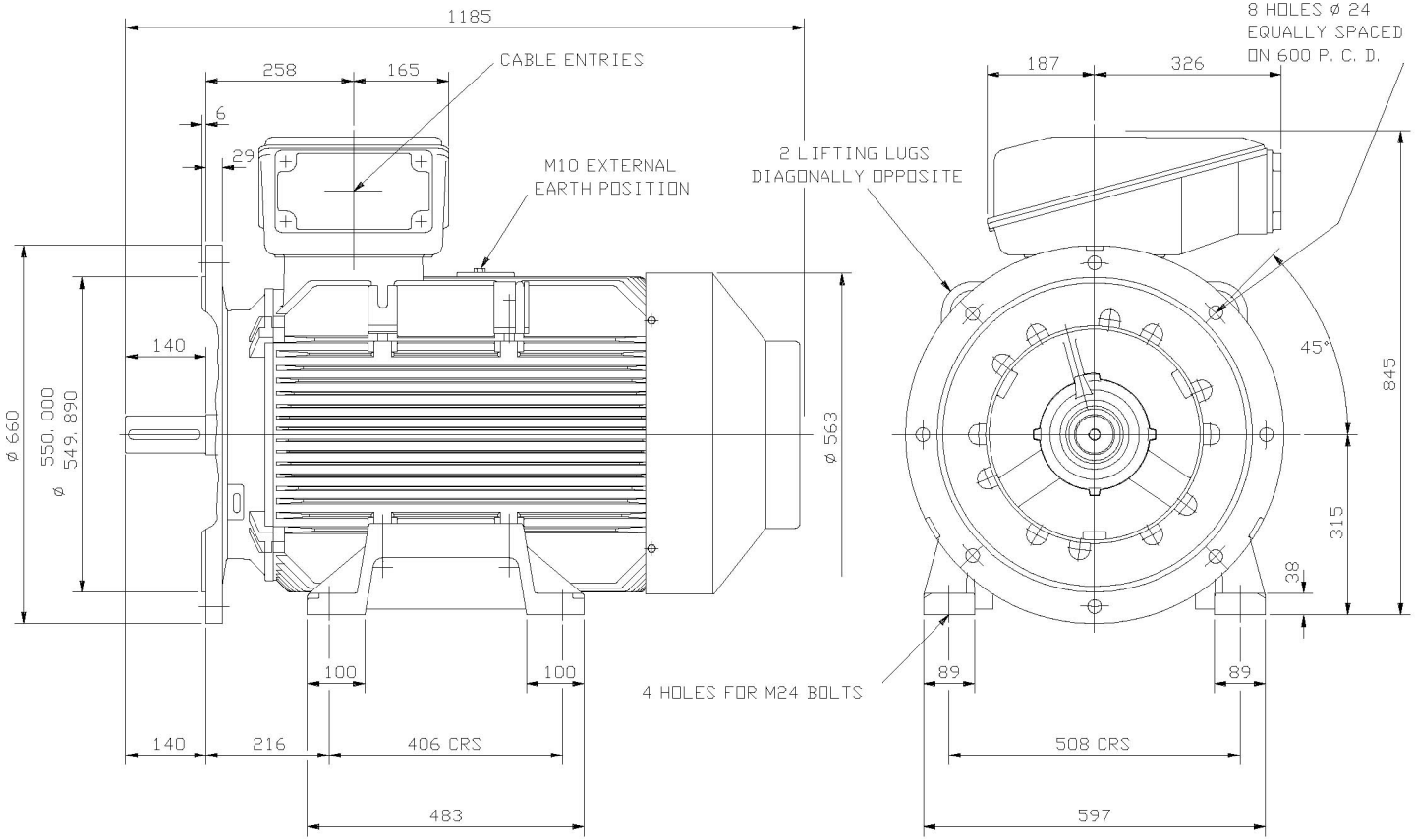

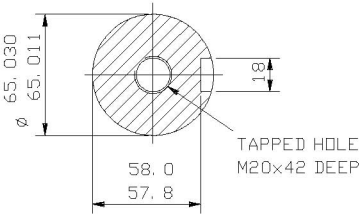

SECTION THROUGH
SHAFT EXTENSION
(SCALE 1:2)

NOTE: -
TERMINAL BOX CAN BE SIDE MOUNTED (LEFT OR RIGHT) BY REFITTING FEET 90° IN APPROPRIATE DIRECTION.
CABLE ENTRY CAN BE SUPPLIED IN ANY ONE OF FOUR POSITIONS AT 90° INTERVALS.

CUSTOMER		
ORDER No.		
SERIAL No.		
FRAME SIZE		
kW	RPM.	
Hz	PHASE 3	
VOLTS	POLES	
BRGS.	DE.	NDE.
MOTOR NETT. WT.		Kg.
INSULATION CLASS		
TEMPERATURE RISE	°C	
DESIGN AMBIENT TEMPERATURE		°C
HEATER WATTS & VOLTS	WATTS,	VOLTS
REMARKS		

ALL DIMENSIONS IN MILLIMETRES

FIRST ANGLE PROJECTION

BROOK CROMPTON

NOTE !
2.5 ENDPLAY WILL BE PROVIDED FOR ENDTHRUST PROTECTION WHEN CUSTOMERS NOTIFY US OF THEIR INTENTION TO USE RIGID COUPLINGS AND DRIVEN MACHINES WITHOUT ENDPLAY.

OUTLINE DIMENSIONS OF STD. FOOT/FLANGE MOUNTED METRIC A. C. MOTOR
TOTALLY ENCLOSED FAN VENTILATED.
FITTED WITH TOP MOUNTED TERMINAL BOX
FRAME SIZE : - W-DF315S-H (2 POLE)

SCALE	1:8	DATE	DRG. No.
DRAWN			
CHECKED			
APPROVED			REVISION: DATE