TYPE	OUTPUT		POLE	TIME RATING	VOLTAGE V	Hz	SYN.SPEED R.P.M
	HP.	kW.					
ASHA	100	75	6	CONT.	2300/4160	60	1200

WEATHER PROTECTED TYPE I. SQUIRREL-CAGE ROTOR

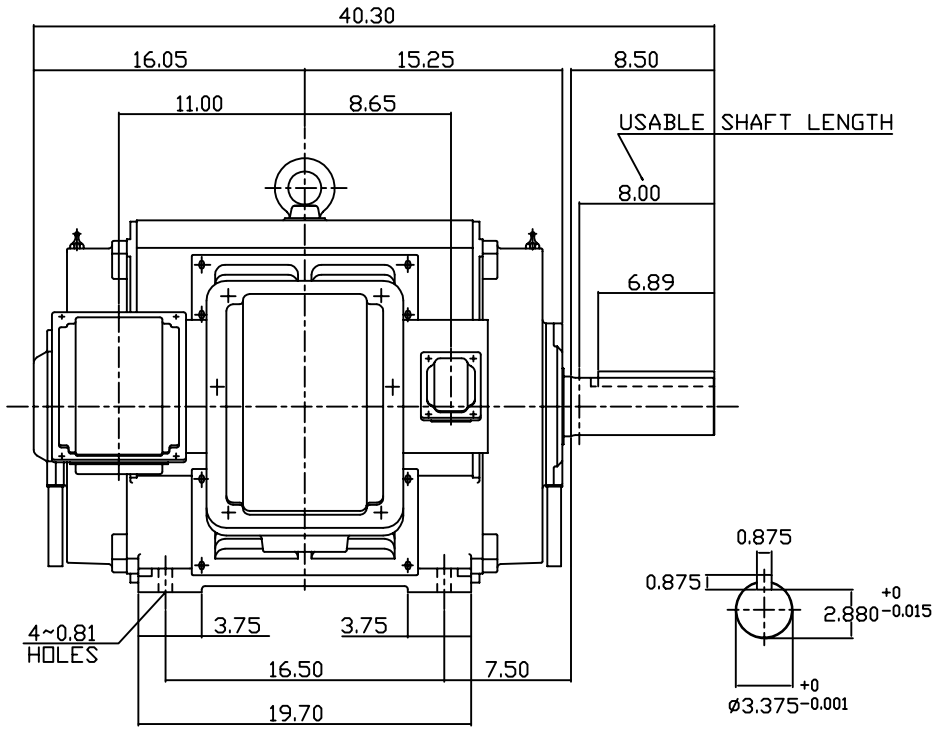

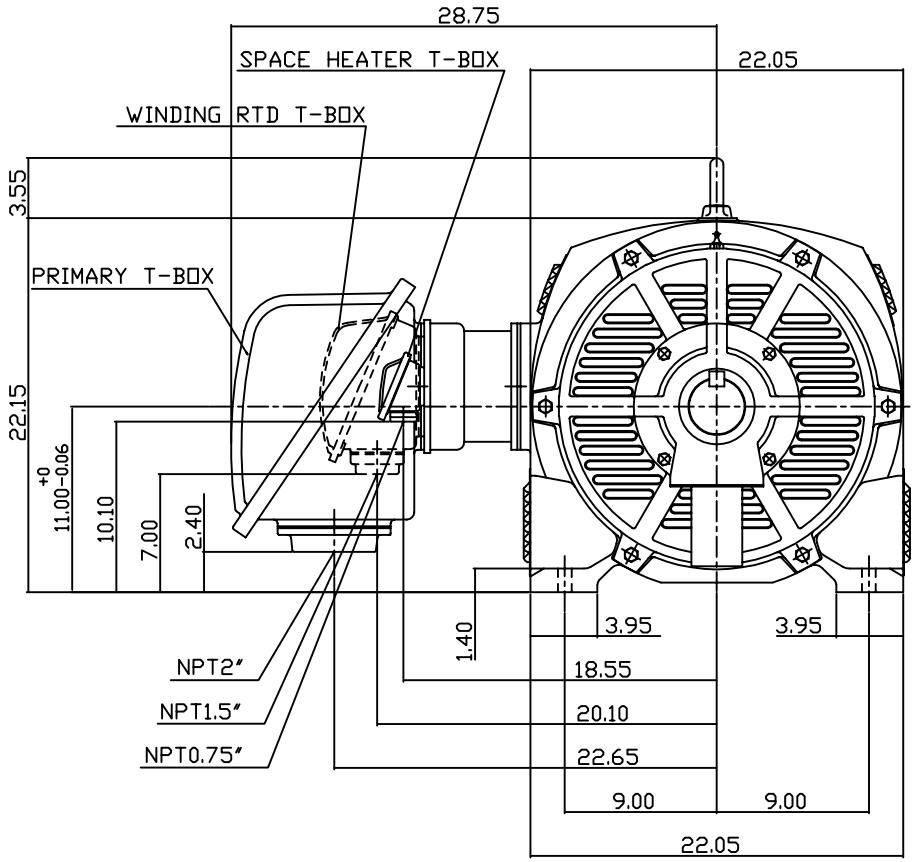

NOTE:

1. DIMENSIONS IN INCH.
2. FRAME NO. 445T
3. F CLASS INSULATION, S.F.1.15
4. FOR BELT DRIVE APPLICATIONS
5. WITH SPACE HEATER 120 VOLT SINGLE PHASE 150 WATTS
6. 100 OHM PLATINUM WINDING RTD'S 2/PHASE
7. BEARING SIZE: DRIVE END: NU318
   NON-DRIVE END: 6318
8. MOTOR APPROX. WEIGHT: 1370 LBS

TW-56C

DWN.	W.L.LIN	APR-14-2003
CHKD.	W.L.LIN	APR-14-2003
APPD.	C.WANG	APR-14-2003

DATE MAY 5, 2004

CATALOG NO. P1006R

OUTLINE DIMENSIONS

3-PHASE INDUCTION MOTOR

TECO Westinghouse

DWG NO. 3A040T3680

REV: 00

Downloaded from Dealers Industrial Equipment -- Visit https://DealersElectric.com or call (908) 688-1966 for all of your Teco needs!