| TYPE | OUTPUT | | POLE | TIME RATING | VOLTAGE V | Hz | SYN.SPEED R.P.M |
|---|---|---|---|---|---|---|---|
| | HP. | kW. | | | | | |
| AEHH8P | 125 | 93.3 | 4 | CONT. | 230/460 | 60 | 1800 |

TOTALLY ENCLOSED FAN-COOLED TYPE. SQUIRREL-CAGE ROTOR

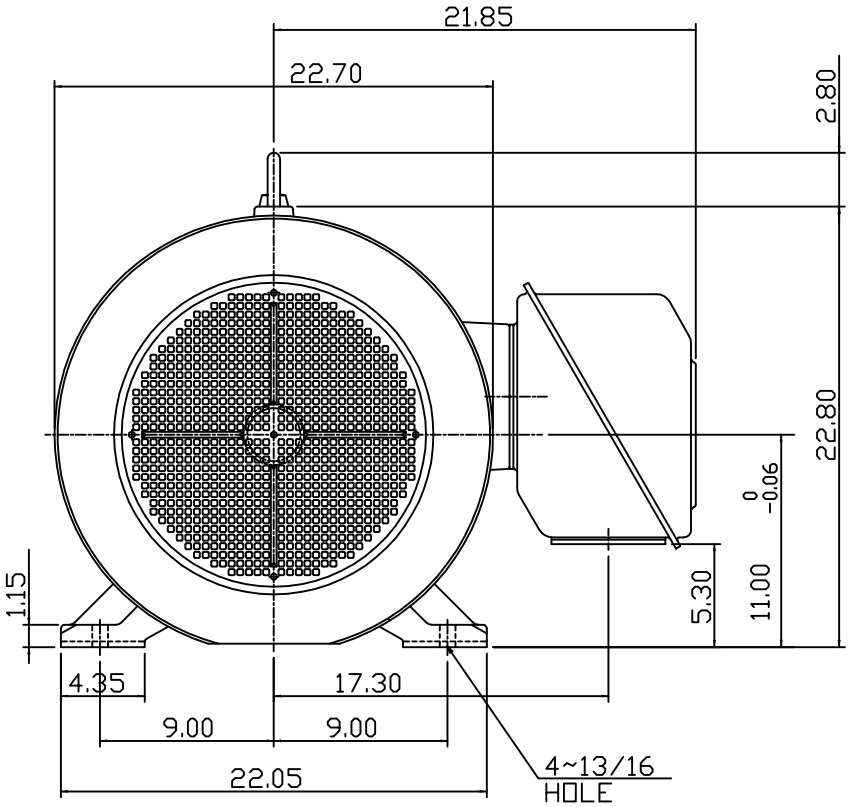


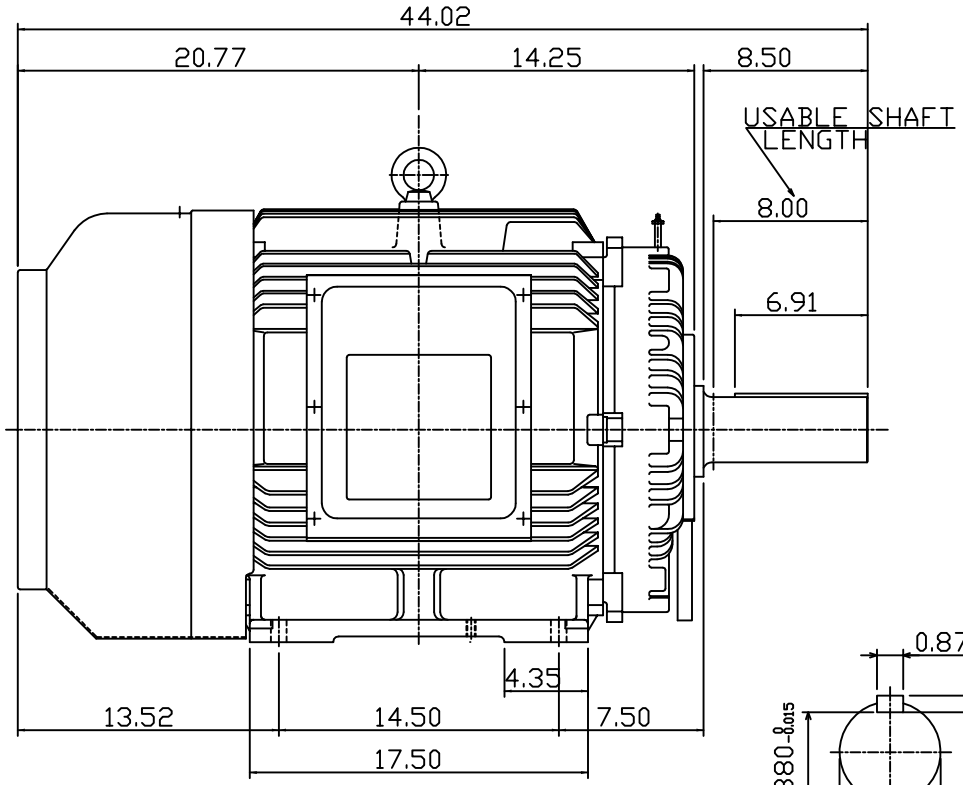


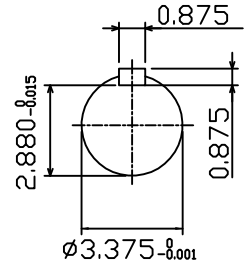


SHAFT END
[ENLARGED VIEW]

NOTE:
1. DIMENSIONS IN INCHES
2. FRAME SIZE 444T
3. F CLASS INSULATION, S.F. 1.15
4. FOR BELTED APPLICATION
5. BEARING NO.: DRIVE END: NU318C3
   OPP. DRIVE END: 6316C3
6. ENCLOSURE: IP44
7. APPROX. WEIGHT: 1500 LBS

| | | |
|---|---|---|
| DWN. | S.LEE | JAN·26·2011 |
| CHKD. | S.LEE | JAN·26·2011 |
| APPD. | H.LIU | JAN·26·2011 |

DATE FEB. 11, 2011
CATALOG #: NP1254R

OUTLINE DIMENSIONS
3-PHASE INDUCTION MOTOR

TECO Westinghouse

DWG NO. 3A049DWB10464-25
REV: 00

Downloaded from Dealers Industrial Equipment -- Visit https://DealersElectric.com or call (908) 688-1966 for all of your Teco needs!