DATE DEC. 13, 2010	OUTLINE DIMENSIONS	MOTOR TYPE: AEHH8P
CAT. #: NP0256	3-PHASE INDUCTION MOTOR	FRAME NO. 324T

Pole	HP	kW	Hz	VOLT	Syn.Speed r/min(rpm)
6	25	18.7	50	190/380	1000

Ins	Rating	Dimension in	Approx Weight	Bearings
F	CONT.	inch	612 lbs.	DE: 6312 NDE: 6212

Totally Enclosed Fan-Cooled Type, Squirrel-cage Rotor.

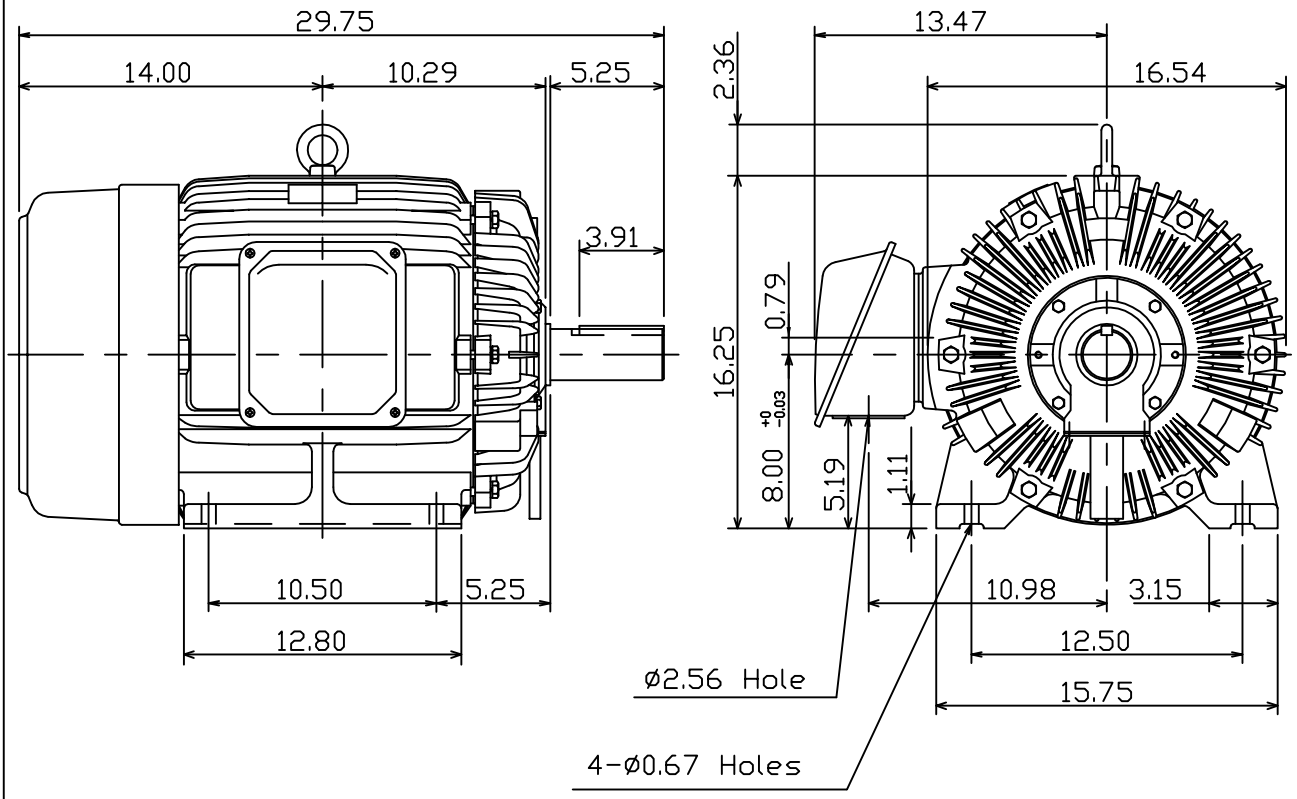

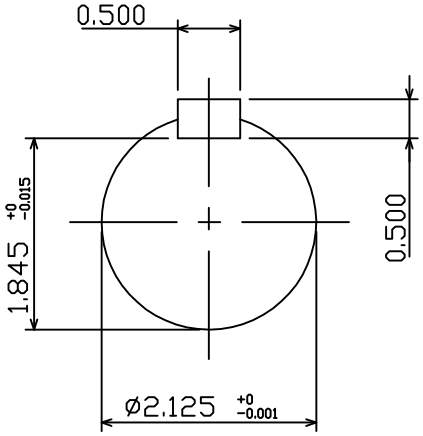

2	12.06.10	郭耿良	

DWN.	J.H.LIANG	05-20-99	TECO Westinghouse	DWG NO. 31049J355272
CHKD.	C.H.KAO	06-15-99		
APPD.	Y.B.HUANG	06-15-99		

Downloaded from Dealers Industrial Equipment -- Visit https://DealersElectric.com or call (908) 688-1966 for all of your Teco needs!