DATE APRIL 26, 2011	OUTLINE DIMENSIONS	MOTOR TYPE: AEHH8P-CF
CAT. #: NP0054C	3-PHASE INDUCTION MOTOR	FRAME NO. 184TC

Pole	HP	kW	Hz	VOLT	Syn.Speed r/min(rpm)
4	5	3.73	50	190/380	1500

Ins	Rating	Dimension in	Approx Weight	Bearings
F	CONT.	inches	102 lbs.	DE: 6306ZZ NDE: 6306ZZ

Totally Enclosed Fan-Cooled Type, Squirrel-Cage Rotor.

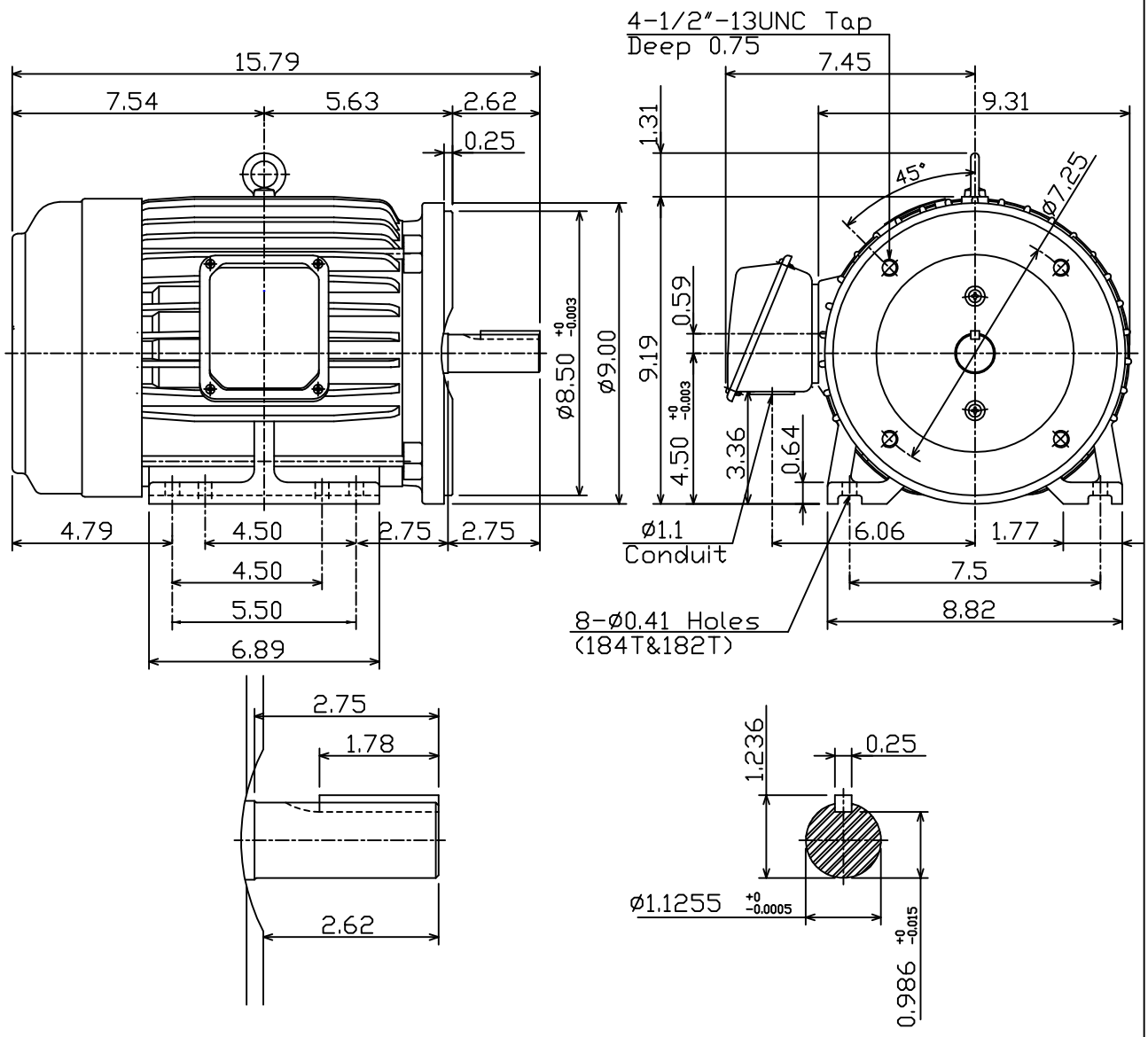

0				

DWN.	C.S.LO	12-21-04	TECO Westinghouse	DWG NO.
CHKD.	C.S.LO	12-27-04		31049D190960
APPD.	M.C.TSAI	12-27-04		

Downloaded from Dealers Industrial Equipment -- Visit https://DealersElectric.com or call (908) 688-1966 for all of your Teco needs!