TYPE	OUTPUT		POLE	TIME RATING	VOLTAGE V	Hz	SYN.SPEED R.P.M
	HP.	kW.					
AEHGTK	200	149.2	2	CONT.	2300/4160	60	3600

TOTALLY ENCLOSED FAN-COOLED TYPE. SQUIRREL-CAGE ROTOR

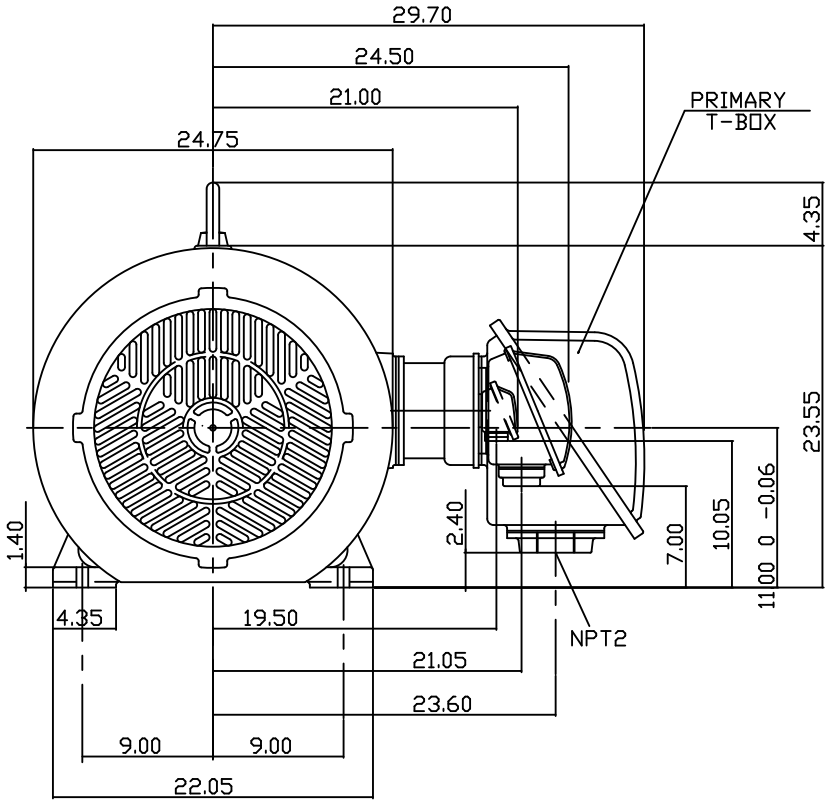

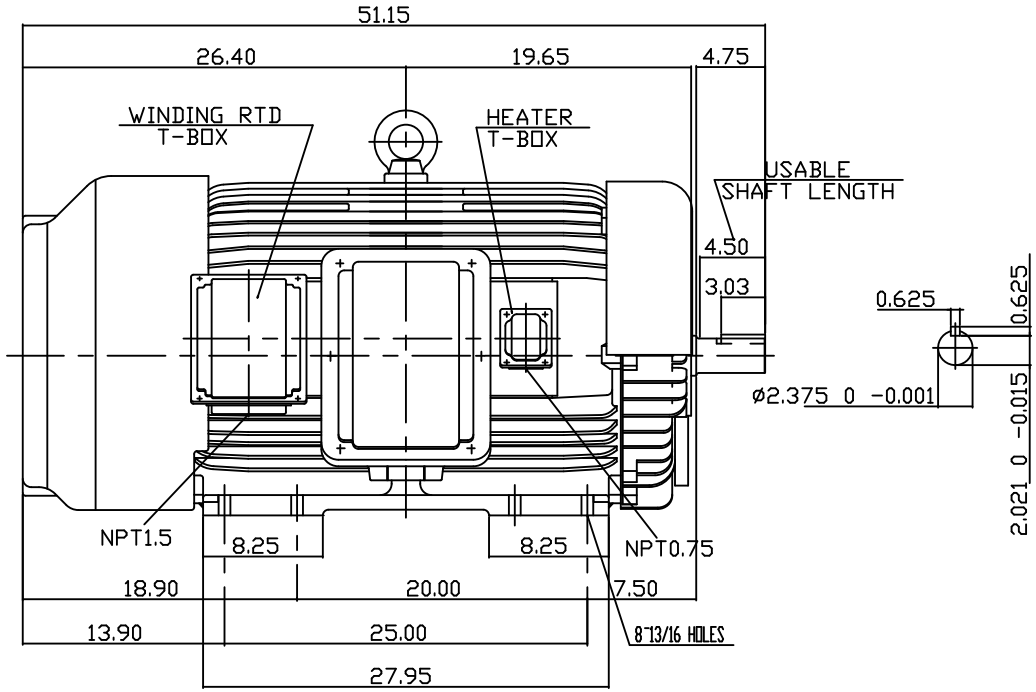

NOTE:

1. DIMENSIONS IN INCH
2. FRAME NO. 449TS
3. F CLASS INSULATION, S.F.1.15
4. FOR DIRECT FLEXIBLE COUPLING
5. WITH WINDING RTD & SPACE HEATER
6. ENCLOSURE: IP55
7. BEARING SIZE DRIVE END: 6314C3
   NON-DRIVE END: 6314C3
8. APPROX. WEIGHT: 2400 LBS

TW-56C

DWN.	C. COOK	09-20-2013

DATE: MAY 13, 2013
CATALOG # KG2002

OUTLINE DIMENSIONS
3-PHASE INDUCTION MOTOR

TECO Westinghouse

DWG NO. 3B040C100 REV: 00

Downloaded from Dealers Industrial Equipment -- Visit https://DealersElectric.com or call (908) 688-1966 for all of your Teco needs!