| TYPE | OUTPUT | | POLE | TIME RATING | VOLTAGE V | Hz | SYN.SPEED R.P.M |
|---|---|---|---|---|---|---|---|
| | HP | KW | | | | | |
| AEJHTK | 1250 | 930 | 6 | CONT. | 2300/4160 | 60 | 1200 |

TOTALLY ENCLOSED FAN COOLED TYPE. SQUIRREL CAGE ROTOR

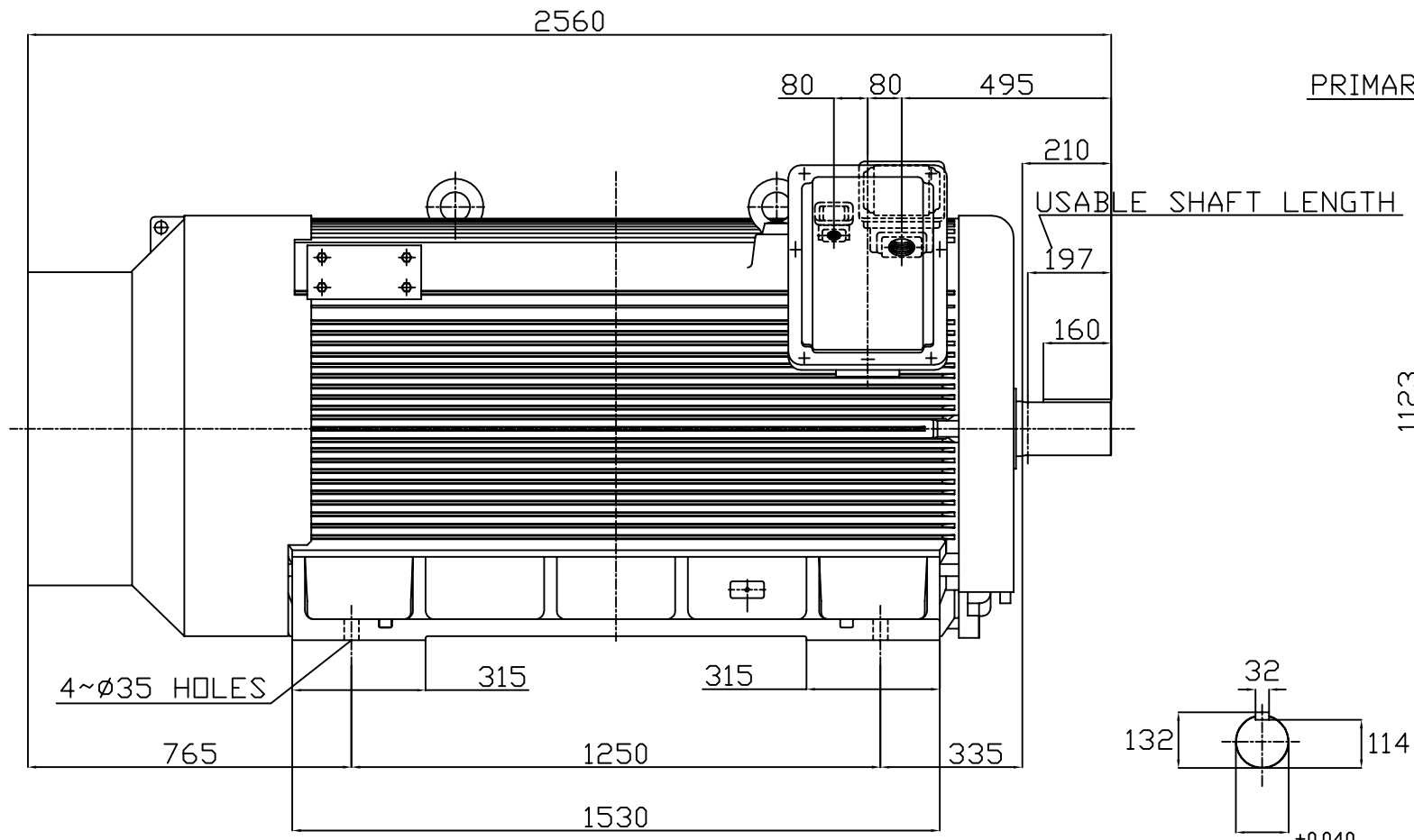


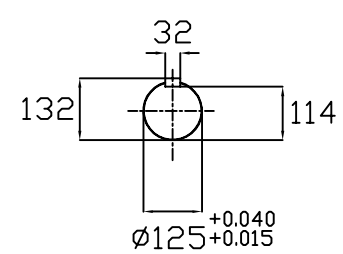


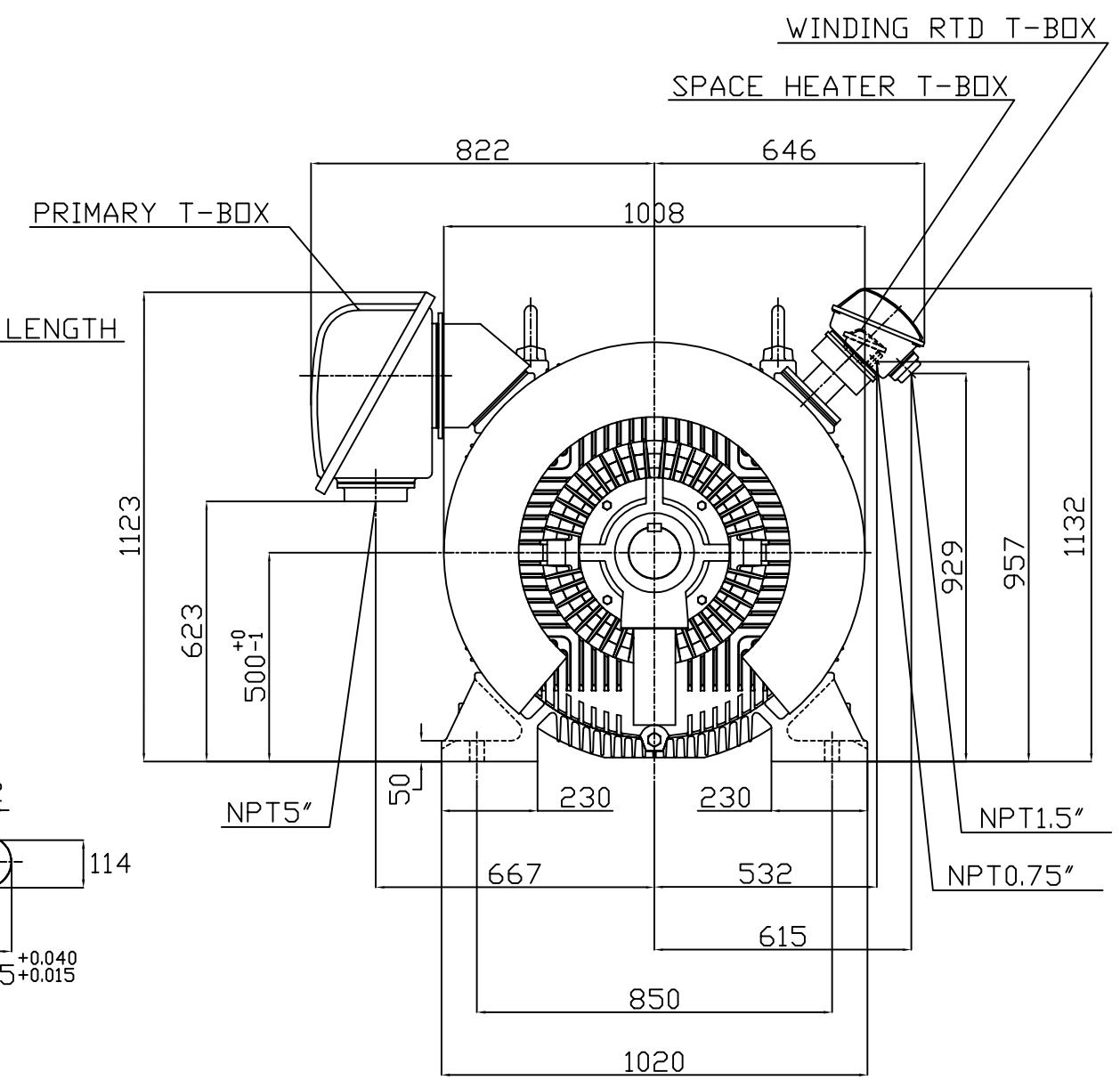


1. DIMENSIONS IN MM
2. FRAME NO. 500C
3. F CLASS INSULATION
4. FOR DIRECT FLEXIBLE COUPLING
5. WITH SPACE HEATER 120 VOLT SINGLE PHASE 400 WATTS
6. WITH 100 OHM PLATINUM WINDING RTD'S 2/PHASE
7. BEARING SIZE: DRIVE END: 6326
   NON-DRIVE END: 6324M/C3 VL024
8. MOTOR APPROX. WEIGHT: 5200 KGS

TW-66C

| | | |
|---|---|---|
| DWN. | W.L.LIN | APR·22·2003 |
| CHKD. | W.L.LIN | APR·22·2003 |
| APPD. | C.WANG | APR·22·2003 |

DATE MAY 7, 2004

CATALOG NO. JH12506

OUTLINE DIMENSIONS

3-PHASE INDUCTION MOTOR

TECO Westinghouse

DWG NO. 3A040T4094 REV: 00

Downloaded from Dealers Industrial Equipment -- Visit https://DealersElectric.com or call (908) 688-1966 for all of your Teco needs!