DATE January 20, 2009	OUTLINE DIMENSIONS	MOTOR TYPE: AEHH8B-CF
CAT. #:	3-PHASE INDUCTION MOTOR	FRAME NO. 184TC

Pole	HP	kW	Hz	VOLT	Syn.Speed r/min(rpm)
2/4/6/8	-	-	60	460	-

Ins	Rating	Dimension in	Approx Weight	Bearings
F	CONT.	inches	120 LBS	DE: 6306ZC3 NDE: 6306ZC3

Totally Enclosed Fan-Cooled Type.Squirrel-Cage Rotor.

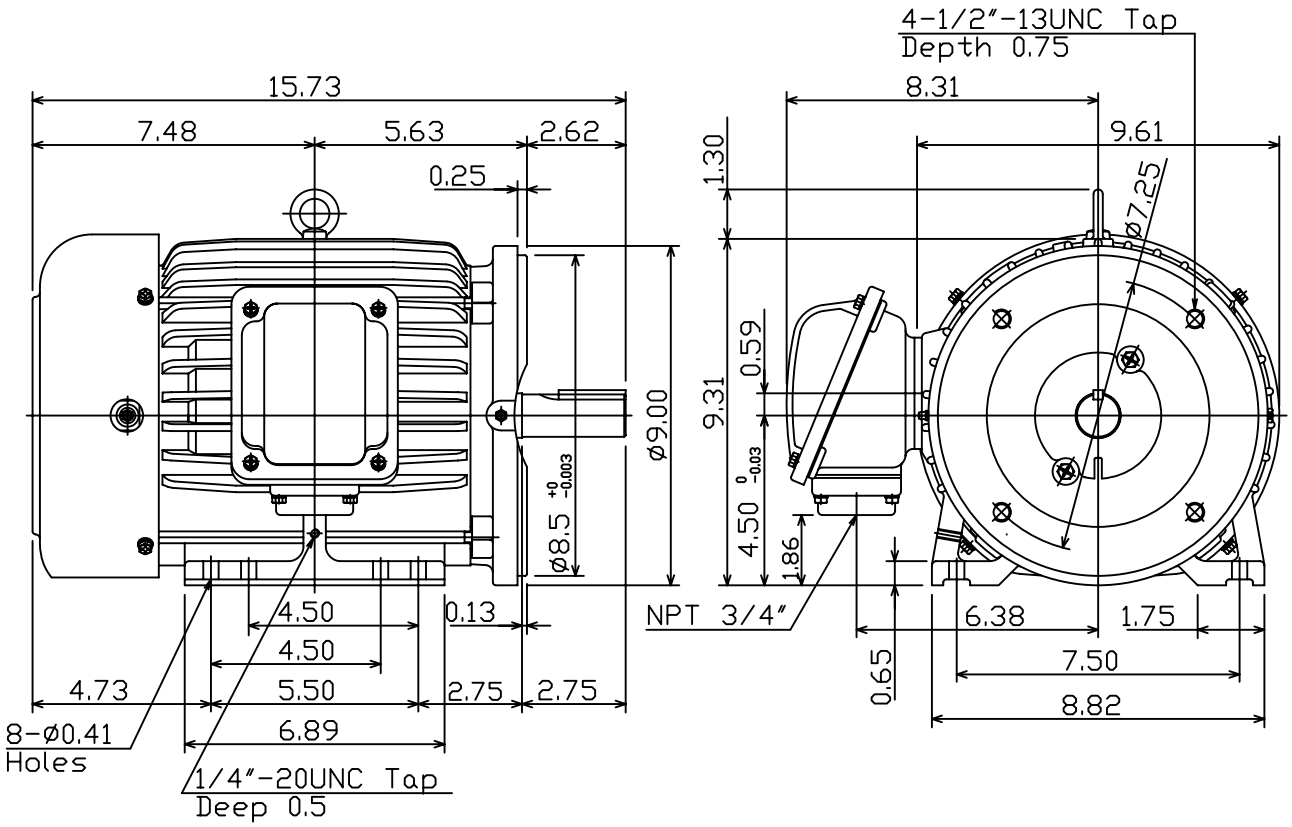

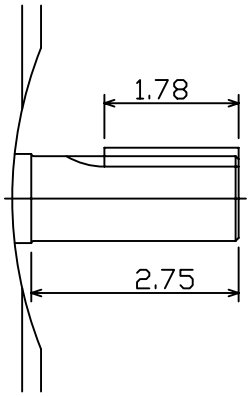

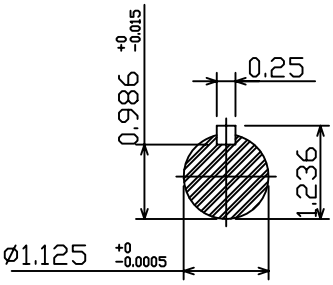

Note:
1. With Inpro Seals On Both End.

0			

DWN.	D.V.CHIAN	09·12·04	TECO Westinghouse	DWG NO.
CHKD.	C.S.LO	09·20·04		31049M892130
APPD.	M.C.TSAI	09·20·04		

Downloaded from Dealers Industrial Equipment -- Visit https://DealersElectric.com or call (908) 688-1966 for all of your Teco needs!