TYPE	OUTPUT		POLE	TIME RATING	VOLTAGE V	Hz	SYN.SPEED R.P.M
	HP.	kW.					
AEHH8N	125	93.3	2	CONT.	190/380	50	3000

TOTALLY ENCLOSED FAN-COOLED TYPE. SQUIRREL-CAGE ROTOR

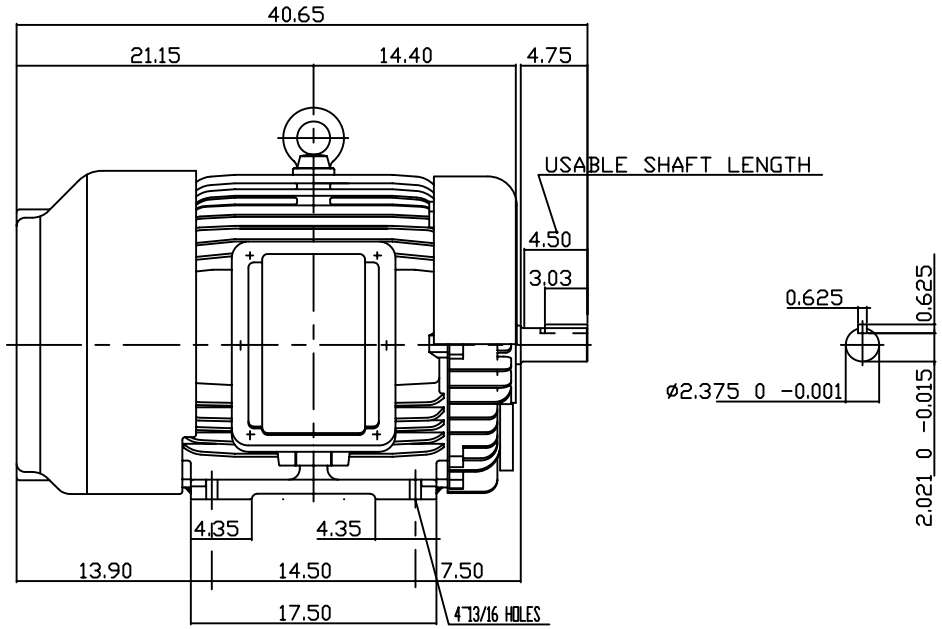

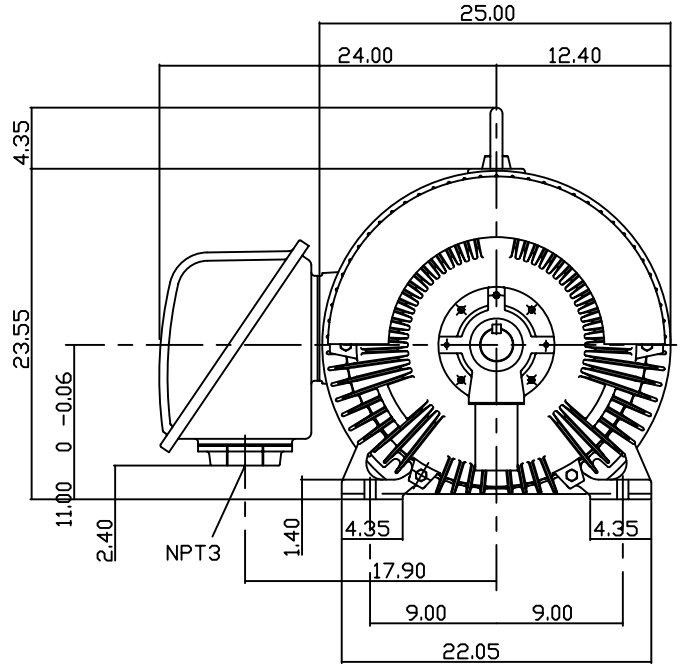

NOTE:

1. DIMENSIONS IN INCH
2. FRAME NO. 444TS
3. F CLASS INSULATION, S.F.1.15
4. FOR DIRECT FLEXIBLE COUPLING
5. ENCLOSURE: IP54
6. BEARING SIZE: DRIVE END: 6314C3
   NON-DRIVE END: 6314C3
7. APPROX. WEIGHT: 1450 LBS

DWN.	T.H.Pan	FEB 16 2005
CHKD.	H.HUANG	FEB 16 2005
APPD.	C.WANG	FEB 16 2005

DATE 20050616

CAT. # EP1252-50

OUTLINE DIMENSIONS

3-PHASE INDUCTION MOTOR

TECO Westinghouse

DWG NO. 3A040Y683 REV: 00

TW-56C

Downloaded from Dealers Industrial Equipment -- Visit https://DealersElectric.com or call (908) 688-1966 for all of your Teco needs!