DATE Sept. 25, 2006	OUTLINE DIMENSIONS	MOTOR TYPE: AEHH8N-CF
Cat. #: EP0602C-50	3-PHASE INDUCTION MOTOR	FRAME NO. 364TSC

Pole	HP	kW	Hz	VOLT	Syn. Speed r/min(rpm)
2	60	44.8	50	190/380	3000

Ins	Rating	Dimension in	Approx Weight	Bearings
F	CONT.	inches	839 lbs	DE: 6312C3 NDE: 6212C3

Totally Enclosed Fan Cooled Type. Squirrel-cage Rotor.

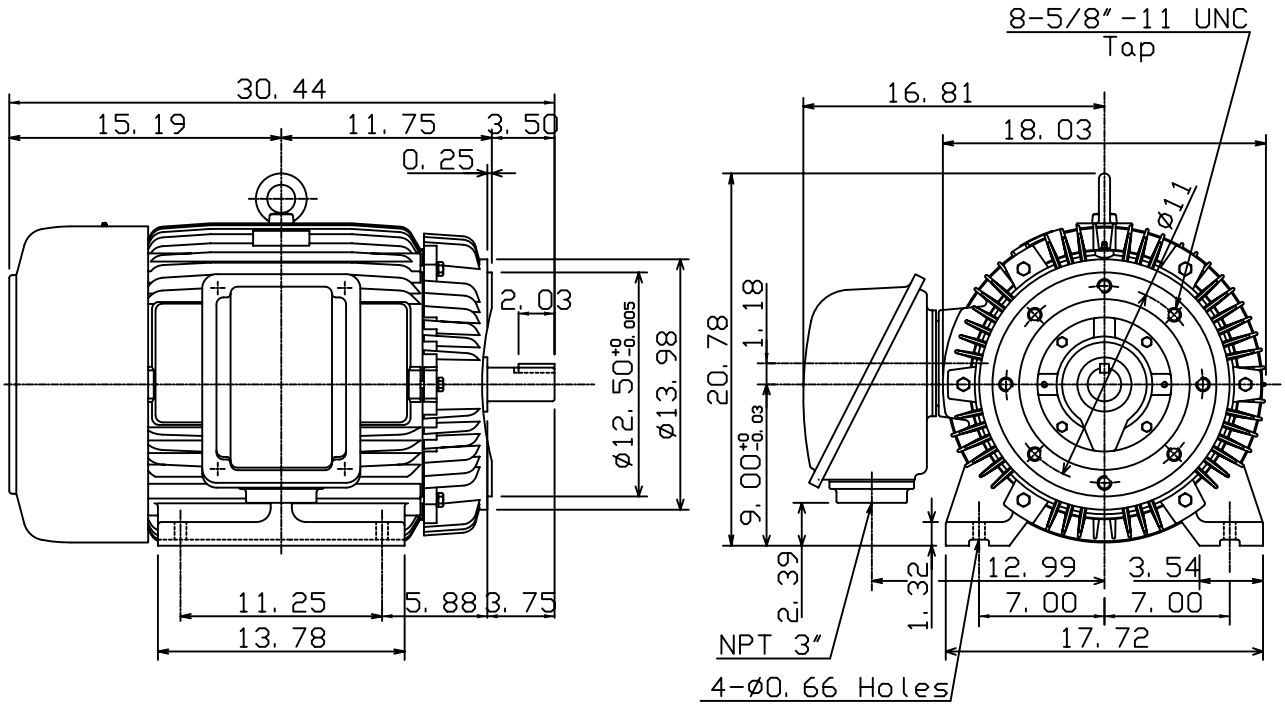

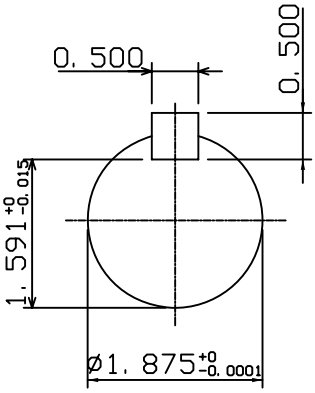

1	01.11.05		K. L. KUO

DWN.	W. C. LAY	07-21-97	TECO Westinghouse	DWG NO.
CHKD.	C. H. KAO	07-21-97		31049J716091
APPD.	Y. B. HUANG	07-21-97		

Downloaded from Dealers Industrial Equipment -- Visit https://DealersElectric.com or call (908) 688-1966 for all of your Teco needs!