DATE Sept. 25, 2006	OUTLINE DIMENSIONS	MOTOR TYPE: AEHH8N-CF
Cat. #: EP0302C	3-PHASE INDUCTION MOTOR	FRAME NO. 286TSC

Pole	HP	kW	Hz	VOLT	Syn. Speed r/min(rpm)
2	30	22.4	60	230/460	3600

Ins	Rating	Dimension in	Approx Weight	Bearings
F	CONT.	inches	469 lbs	DE: 6211C3 NDE: 6211C3

Totally Enclosed Fan Cooled Type. Squirrel-cage Rotor.

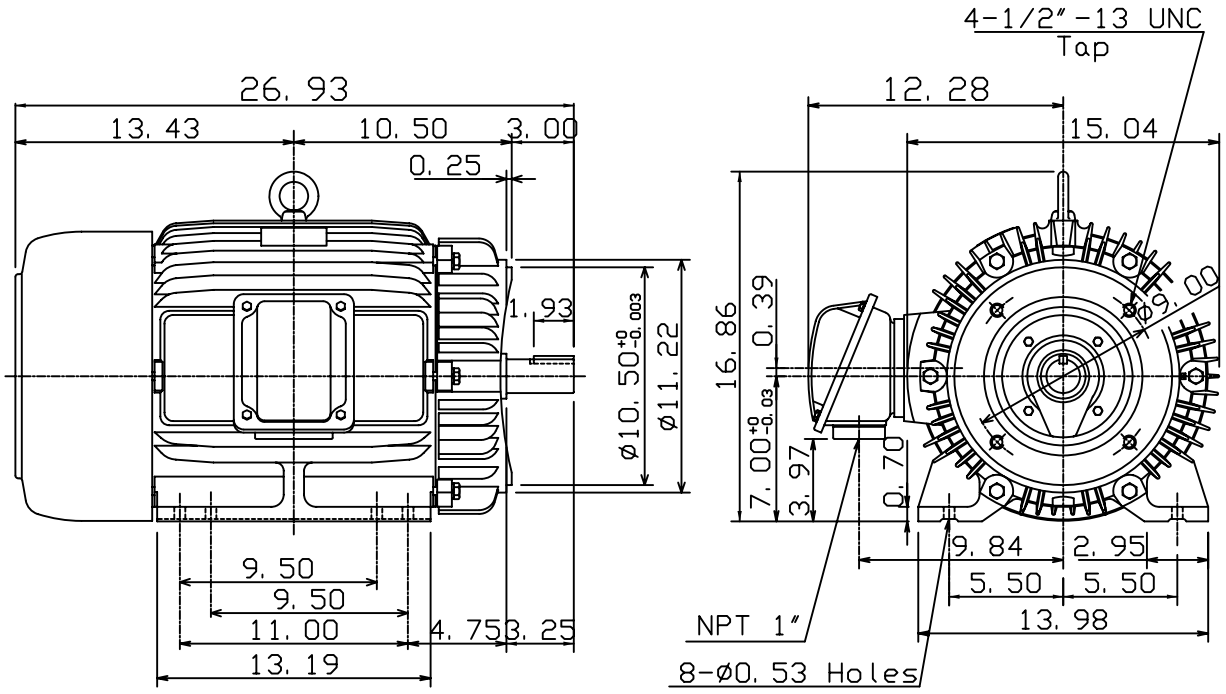

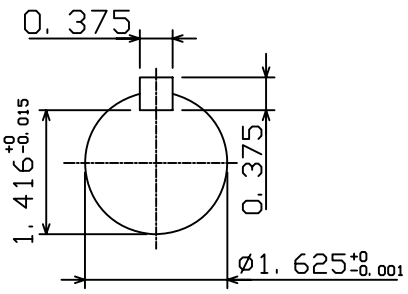

DWN.	K. L. KUO	01·10·05	TECO Westinghouse	DWG NO. 31049J815090
CHKD.	C. H. KAO	01·28·05		
APPD.	M. C. TSAI	01·28·05		

Downloaded from Dealers Industrial Equipment -- Visit https://DealersElectric.com or call (908) 688-1966 for all of your Teco needs!