DATE FEBRUARY 23, 2007	OUTLINE DIMENSIONS	MOTOR TYPE: ASHH
CATALOG NO. DHP0036	3-PHASE INDUCTION MOTOR	FRAME NO. 213T

Pole	HP	KW	Hz	VOLT	Syn. Speed RPM
6	3	2.2	60	230/460	1200

Ins	Rating	Dimension in	Approx Weight	Bearings	
F	CONT.	inch	159 lbs.	DE: 6308zz	NDE: 6306zz

Open Protected Drip-Proof Squirrel Cage Rotor.

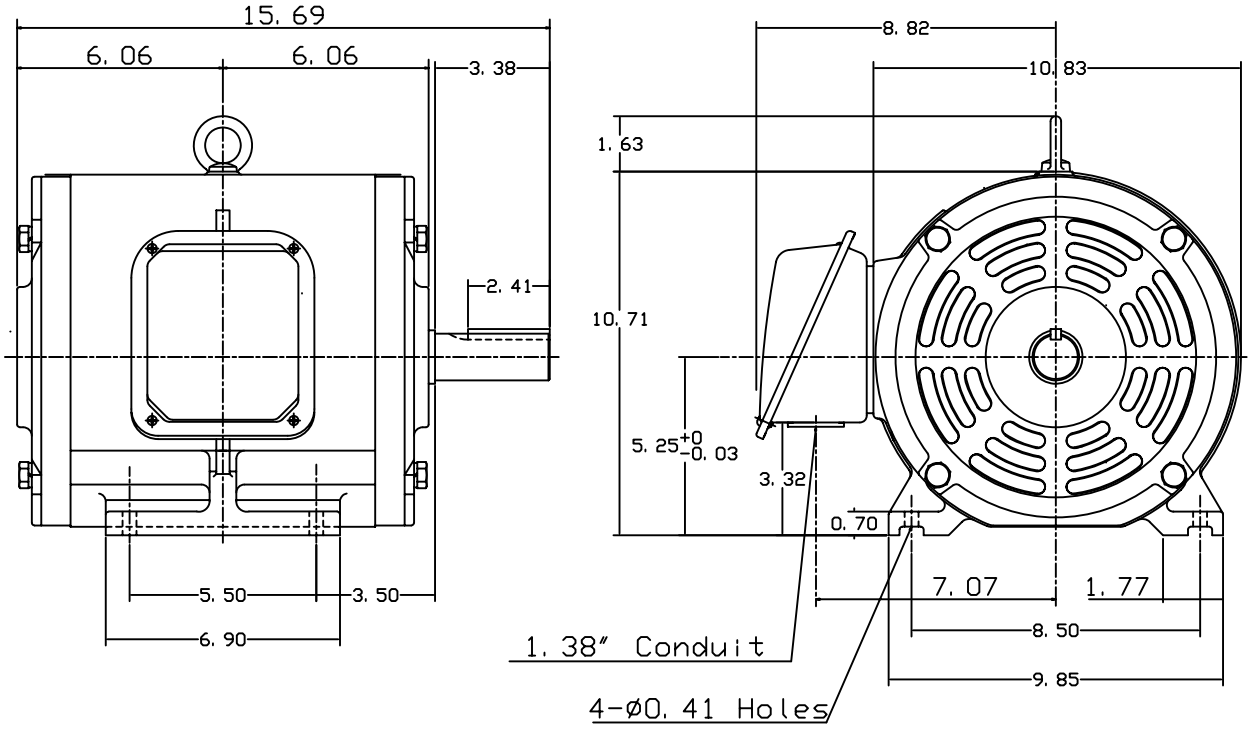

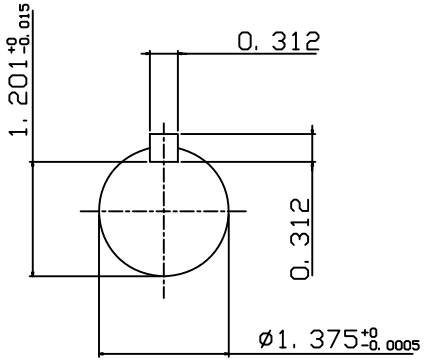

DWN.	J. H. LIANG	12-22-98	TECO Westinghouse	DWG NO. 31057H381000
CHKD.	C. S. LO	05-20-99		
APPD.	Y. B. HUANG	05-20-99		

Downloaded from Dealers Industrial Equipment -- Visit https://DealersElectric.com or call (908) 688-1966 for all of your Teco needs!