Data sheet for three-phase Squirrel-Cage-Motors SIMOTICS

Motor type: **FS: 445T - 6p - 125 hp -**

Client order no.	Item-No.	Offer no.
Order no.	Consignment no.	project

Remarks

Electrical data

Class I Division 1 Groups D

U [V]	Δ / Y	f [Hz]	P [HP]	P [kW]	n [rpm]	I Load [Amps] 4/4	3/4	1/2	0	LRC	Nom. Eff Load [%] 4/4	3/4	2/4	Pwr. Factor Load [%] 4/4	3/4	2/4	Torque [lb-ft]	T_A/T_N LRT [%]	T_k/T_N BDT [%]
460		60	125.00	-/-	1,185	144.00	112.20	83.20	48.00	908.0	95.0	95.4	95.1	85.0	82.0	74.0	554.0	160	200

Frame Type: 445T	Type of constr.: (A) Foot mounted - End shield	Ins. Cl.:Insulation class F	Motor Prot.:(A) No winding protection	NEMA Des.: B	S.F.: 1.15
Mtr. WT:1,771		Temp. Rise Cl.: B	Amb. Temp.: + to -20 °C @1000 m	kVA: G	I.P.: IP65

Mechanical data

Sound level (SPL / SWL) at 60 Hz	75.0 dB(A) / 86.0 dB(A)

Octave Band Center Frequencies Hertz	250	500	1000	2000	4000	8000	Hz
SPL@3							dB(A)

Moment of inertia	58.5 Lb-ft²
Ext Load Inertia Capability:	1450.0 Lb ft²

Bearings		
Bearing DE | NDE	NU 318	6316 Z C3 S0
Bearing_Type	Roller Bearing	Ball Bearing
AFBMA:	90RU03M0	80BC03JP30
Grease		
Capacity	14.50 oz	7.50 oz
Grease Type:	Exxon Mobile EM	

Thickener	Polyurea
Safe Stall Time Hot	25 s
Safe Stall Time Cold	35 s
Frame material	cast iron
Color, paint shade	
Coating (paint finish)	
Ventilation Type	
Method of cooling	TEFC
Direction of rotation	Bidirectional
Fan Material	Polypropylen ESD
VFD	CT: 4:1 VT: 20:1
Space heaters	without
Brake:	-/-

Terminal box

Lead Wire Connection	6 LEAD - DELTA			
Voltage	L1	L1	L1	Connected together
-- -- --	-- -- --	-- -- --	-- -- --	-- -- --
-- -- --	T1	T2	T3	-- -- --

Terminal box position	(3) Mounting - F-1
Material of terminal box	
Cable entry	-/-

Notes:

I_A/I_N = locked rotor current / current nominal
M_A/M_N = locked rotor torque / torque nominal
M_K/M_N = break down torque / nominal torque

3) Value is valid only for DOL operation with motor design IC411
2) at rated power / at full load

responsible dep.	technical reference	created by	approved by	*Technical data are subject to change! There may be discrepancies between calculated and rating plate values.*
DI MC LVM		DT Configurator		

SIEMENS	document type: datasheet		document status: released	customer
	title: 1MB2221-4CC21-2AA3		document number	
		rev. 01	creation date 2020-12-22 16:44	language en / Page 1/1

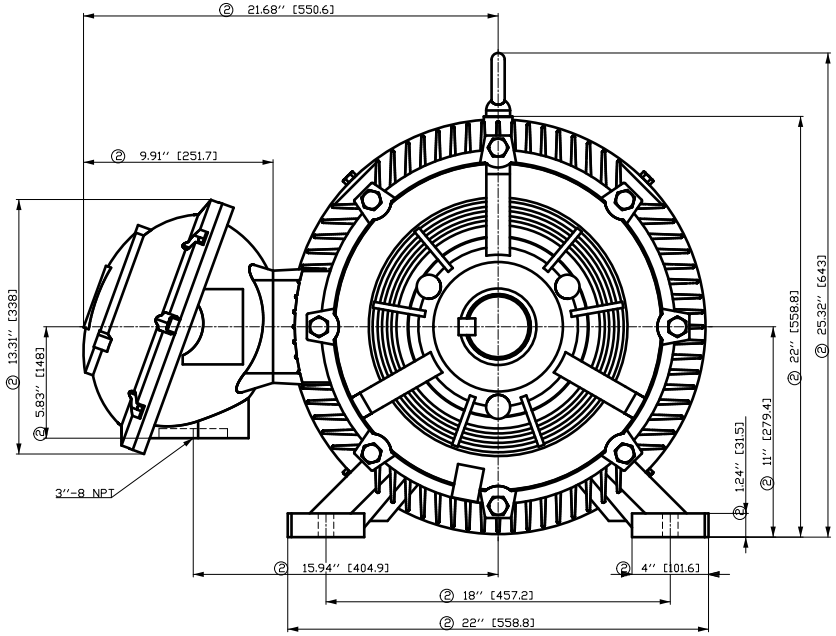

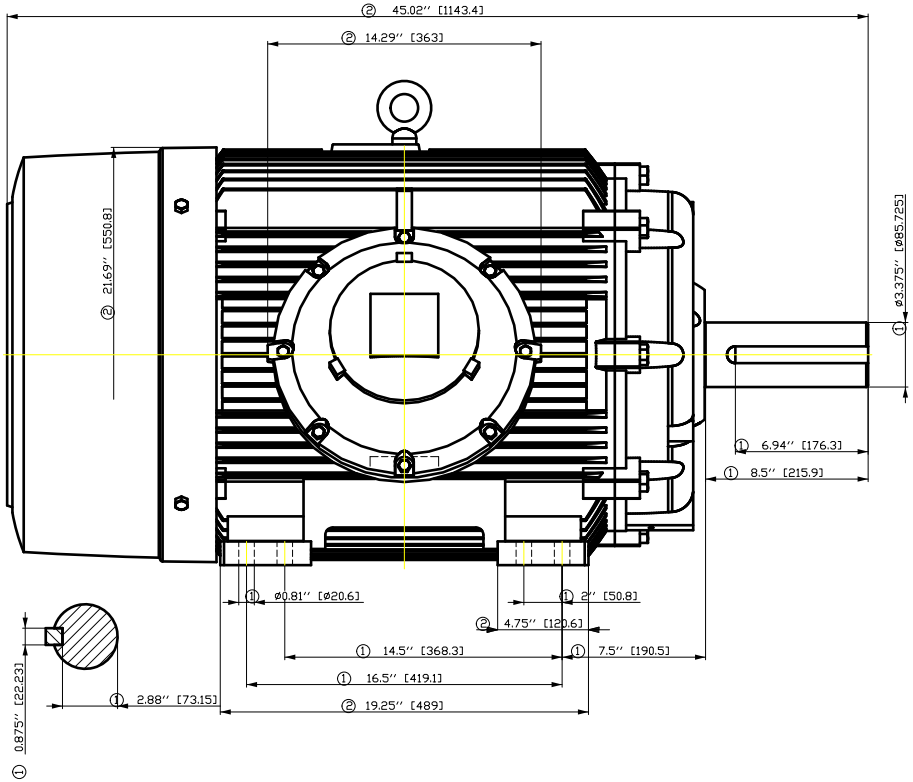

① Tolerances according to NEMA std.

② All these dimensions corresponding to assemblies and castings shall have a tolerance as per DIN standard 1686-GTB 19.

③ Not according to NEMA std.

Tolerance	Surface	Material	Weight	Scale
			-	mm
1MB2221-4CC21-2AA3 -	Author	Dimensional drawing MaÇzeichnung		
	Creator DTK			
	Approval			
	Department			
	Change Order	MLFB		Doc Type
SIEMENS	Doc State 12/22/20	Item No		Paper Size A3
	Revision Index RS	Doc No		1st Language en 2nd Language de
© Siemens AG 2018	Project No -	Ref No -		Sheet 1 of 1

Main terminal diagram

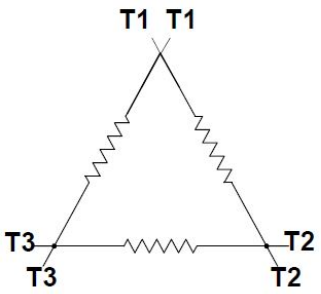

6 LEAD DELTA			
LINES			CONN.
L1	L2	L3	
T1	T2	T3	Δ

responsible dep.	technical reference	created by	approved by	project			
DI MC LVM							
SIEMENS	document type: Wiring Diagram			document status: free		customer	
	title: 1MB2221-4CC21-2AA3			document number			
© Siemens AG 2019				rev. 01	creation date 12/03/2019	language en	Page 1/1

SIEMENS INDUSTRY, INC.

HP	125	VOLTS	<600	RPM	1200	TYPE	XP100 1D1
HZ	60	PHASE	3	FRAME	445T	NEMA	B

TORQUE & CURRENT VS. SPEED

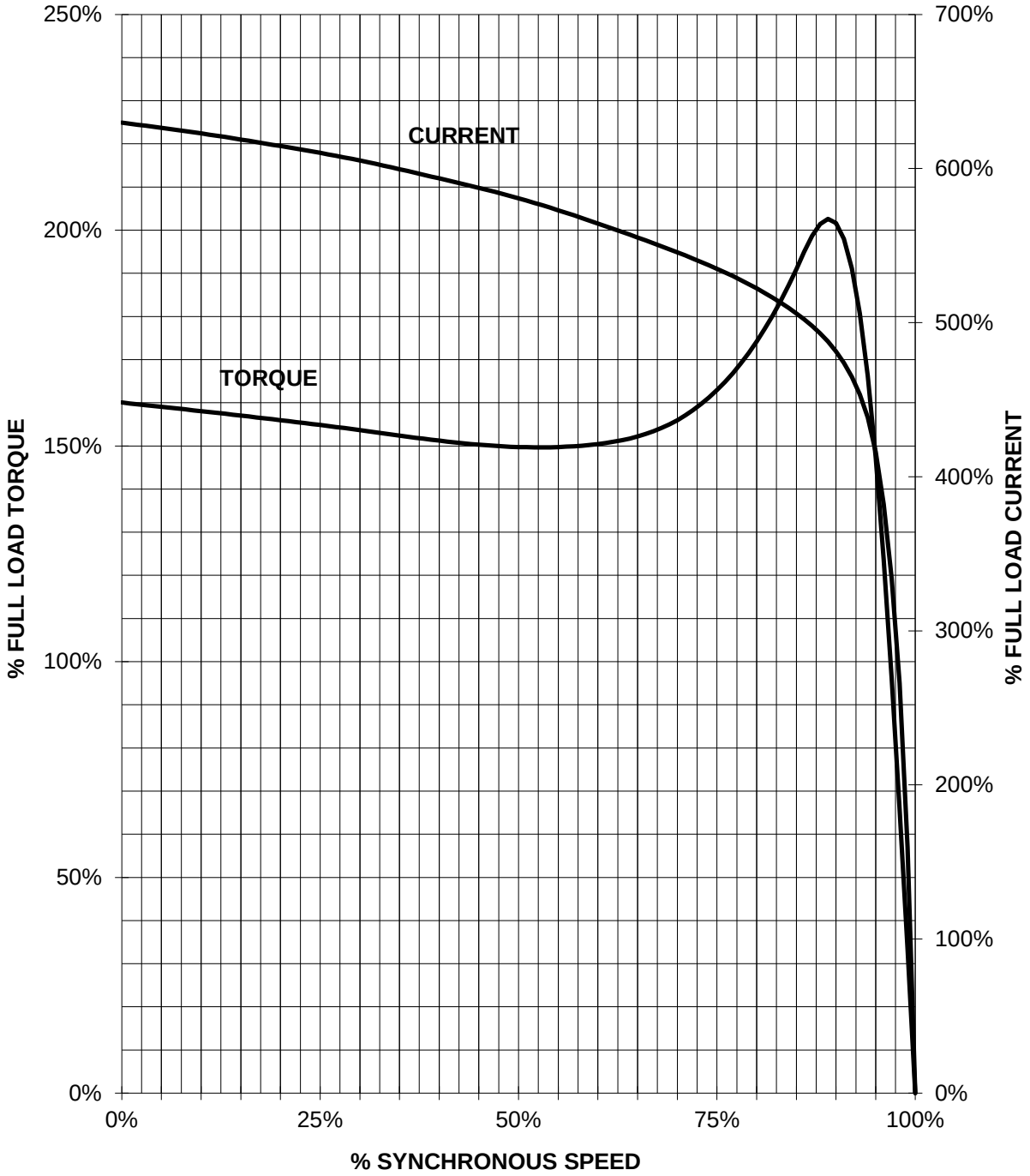

CUSTOMER: _____ ORDER#: _____

PERFORMANCE BASED ON DESIGN CALCULATIONS. SUBJECT TO CHANGE WITHOUT NOTICE.
REV. 1

125 HP 1200 RPM 445T FRAME 460 VOLTS 3 PHASE NEMA DESIGN B

SIEMENS INDUSTRY, INC.
PERFORMANCE CURVE
XP100 1D1

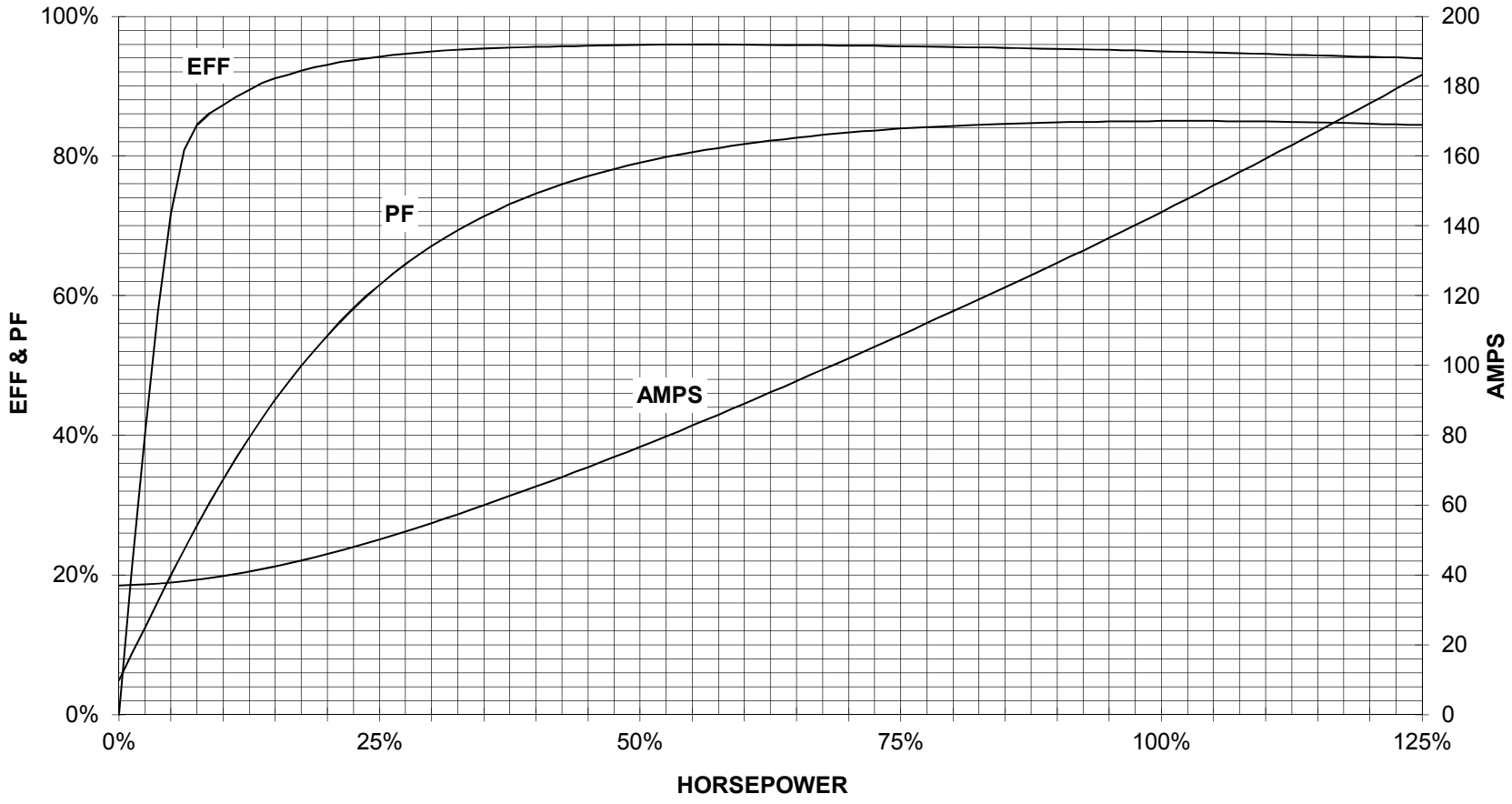

CUSTOMER_____ ORDER #_____ PO #_____

PERFORMANCE BASED ON DESIGN CALCULATIONS. SUBJECT TO CHANGE WITHOUT NOTICE.

REV. 1