SIEMENS

Data sheet for three-phase Squirrel-Cage-Motors

Totally Enclosed Fan Cooled (TEFC)

MLFB-Ordering data: 1MB2221-1CC31-4AA3

Client order no.:
Order no.:
Offer no.:
Remarks:

Item no.:
Consignment no.:
Project:

U [V]	Δ / Y	f [Hz]	P [HP]	P [kW]	n [rpm]	I Load [Amps] 4/4	3/4	1/2	0	LRC	Nom. Eff Load [%] 4/4	3/4	1/2	Pwr. Factor Load [%] 4/4	3/4	1/2	Torque [lb-ft]	T_A/T_N LRT [%]	T_k/T_N BDT [%]
460	Y	60	2.00	-/-	1,160	3.20	2.70	2.30	1.90	20.0	88.5	88.7	87.5	66.1	58.8	46.5	9.1	242	308
230	Y Y	60	2.00	-/-	1,160	6.40	5.39	4.60	3.80	40.0	88.5	88.7	87.5	66.1	58.8	46.5	9.1	242	308

Frame Type	Type of constr.: (A) Foot mounted - End shield	Ins. Cl.: Insulation class F	Motor Prot.: (A) No winding protection	NEMA Des.: B	S.F.: 1.15
Mtr WT: 125 lbs	Mounting: (3) Mounting - F-1	Temp. Rise Cl.: B	Amb. Temp.: +55 °C @1000 m	kVA: J	IP65

Mechanical data

WK2

Rotor Moment of Inertia:	0	Lb-ft²
Ext Load Inertia Capability:	30.0	Lb-ft²

Safe Stall Time

Hot:	23.0	s
Cold:	32.0	s

Typical Noise Data

A-weighted Sound

Sound Pressure:	63.0	dB(A)
Sound Power:	54.0	dB(A)

Octave Band Center Frequencies Hertz

	250	500	1000	2000	4000	8000	Hz
SPL@3 feet	36.0	46.0	52.0	47.0	41.0	31.0	dB(A)

Bearings

	DE	NDE
Bearing size:	6206 Z C3 S0	6206 Z C3 S0
Bearing Type:	Ball Bearing	Ball Bearing
AFBMA:	30BC02JP30	30BC02JP30

Grease

	DE	NDE
Capacity:	0.20 oz	0.20 oz
Type:	Exxon Mobile EM	
Thickener:	Polyurea	

Frame

Frame material:	cast iron
Coating (paint finish):	standard
Color, paint shade:	RAL 7030

Terminal box

Terminal box position:	(3) Mounting - F-1

Lead Wire Connection

Description: 9 LEAD - WYE

Voltage	L1	L2	L3	Connected together	
LOW	T1 T7	T2 T8	T3 T9	T4 T5 T6	Y Y
HIGH	T1	T2	T3	T4 T7-T5 T8-T6 T9	Y

Ventilation Type

Type of Cooling:	TEFC
Fan Material:	Polypropylen ESD
Fan Rotation:	Bidirectional

Additional information

VFD Operation:	CT:	4:1	VT:	20:1
Area: classification:	Class I Division 1 Groups D			
Brake:				

Notes

I_A/I_N = locked rotor current / current nominal
T_A/T_N = locked rotor torque / torque nominal
T_K/T_N = break down torque / nominal torque
[1] Value is valid only for DOL operation with motor design IC411

Technical data are subject to change! There may be discrepancies between calculated and rating plate values.

Generated:
2020-07-06 20:16

Transmittal, reproduction, dissemination and/or editing of this document as well as utilization of its contents and communication thereof to others without express authorization are prohibited. Offenders will be held liable for the payment of damages. All rights created by patent grant or registration of a utility model or design patent are reserved.

Weitergabe sowie Vervielfältigung, Verbreitung und/oder Bearbeitung dieses Dokumentes, Verwertung und Mitteilung seines Inhaltes sind verboten, soweit nicht ausdrücklich gestattet. Zuwiderhandlungen verpflichten zu Schadenersatz. Alle Rechte für den Fall der Patenterteilung, Gebrauchsmuster- oder Geschmacksmustereintragung vorbehalten

Confidential tire de secret d'entreprise. Tous droits réservés.
Comunicado como secreto empresarial. Reservados todos os direitos.
[redacted]
Confiado como secreto de empresa. Nos reservamos todos los derechos.

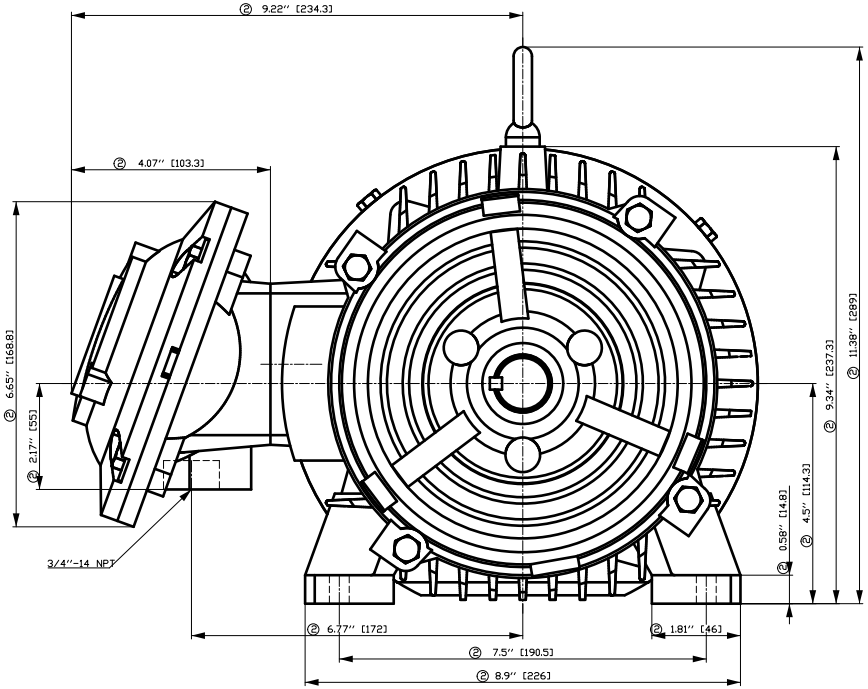

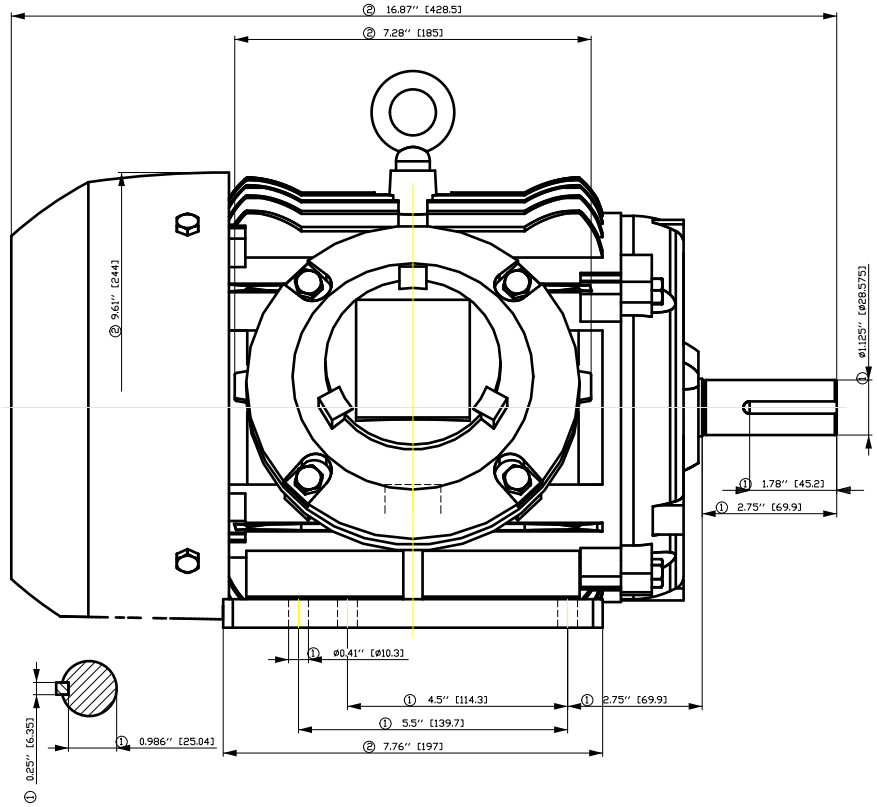

① Tolerances according to NEMA std.

② All these dimensions corresponding to assemblies and castings shall have a tolerance as per DIN standard 1686-GTB 19.

③ Not according to NEMA std.

Tolerance	Surface	Material	Weight	Scale
			-	mm
1MB2221-1CC31-4AA3 -	Author	Dimensional drawing MaÇzeichnung		
	Creator DTK			
	Approval			
	Department			
	Change Order	MLFB	Doc Type	
SIEMENS	Doc State 7/6/20	Item No	Paper Size	A3
	Revision Index RS	Doc No	1st Language	en
			2nd Language	de
© Siemens AG 2018	Project No -	Ref No -	Sheet	1 of 1

Main terminal diagram

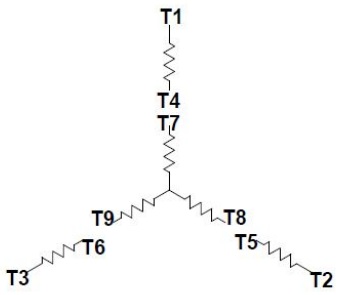

9 LEAD WYE					
Volts	LINES			CONNECTED TOGETHER	CONN.
	L1	L2	L3		
LOW	T1 T7	T2 T6	T3 T9	T4 T5 T6	Y Y
HIGH	T1	T2	T3	T4 T7-T5 T8-T6 T9	Y

responsible dep.	technical reference	created by	approved by	project			
DI MC LVM							
SIEMENS	document type: Wiring Diagram			document status: free		customer	
	title: 1MB2221-1CC31-4AA3			document number			
© Siemens AG 2019				rev. 01	creation date 12/03/2019	language en/en	Page 1/1

SIEMENS INDUSTRY, INC.

HP	2	VOLTS	<600	RPM	1200	TYPE	XP100 1D1
HZ	60	PHASE	3	FRAME	184T	NEMA	B

TORQUE & CURRENT VS. SPEED

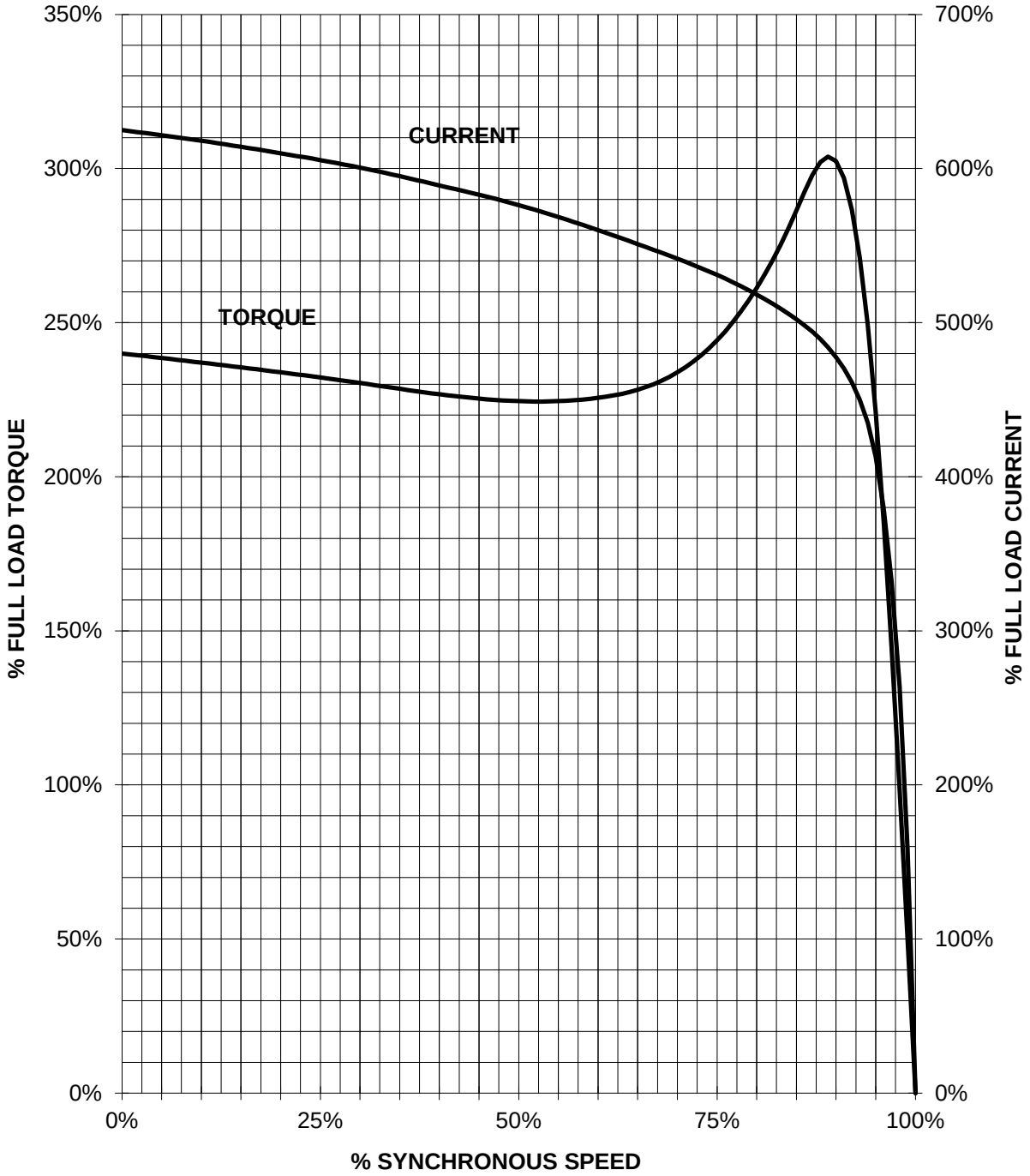

CUSTOMER: _____ ORDER#: _____

PERFORMANCE BASED ON DESIGN CALCULATIONS. SUBJECT TO CHANGE WITHOUT NOTICE.
REV. 1

2 HP 1200 RPM 184T FRAME 460 VOLTS 3 PHASE NEMA DESIGN B

SIEMENS INDUSTRY, INC.
PERFORMANCE CURVE
XP100 1D1

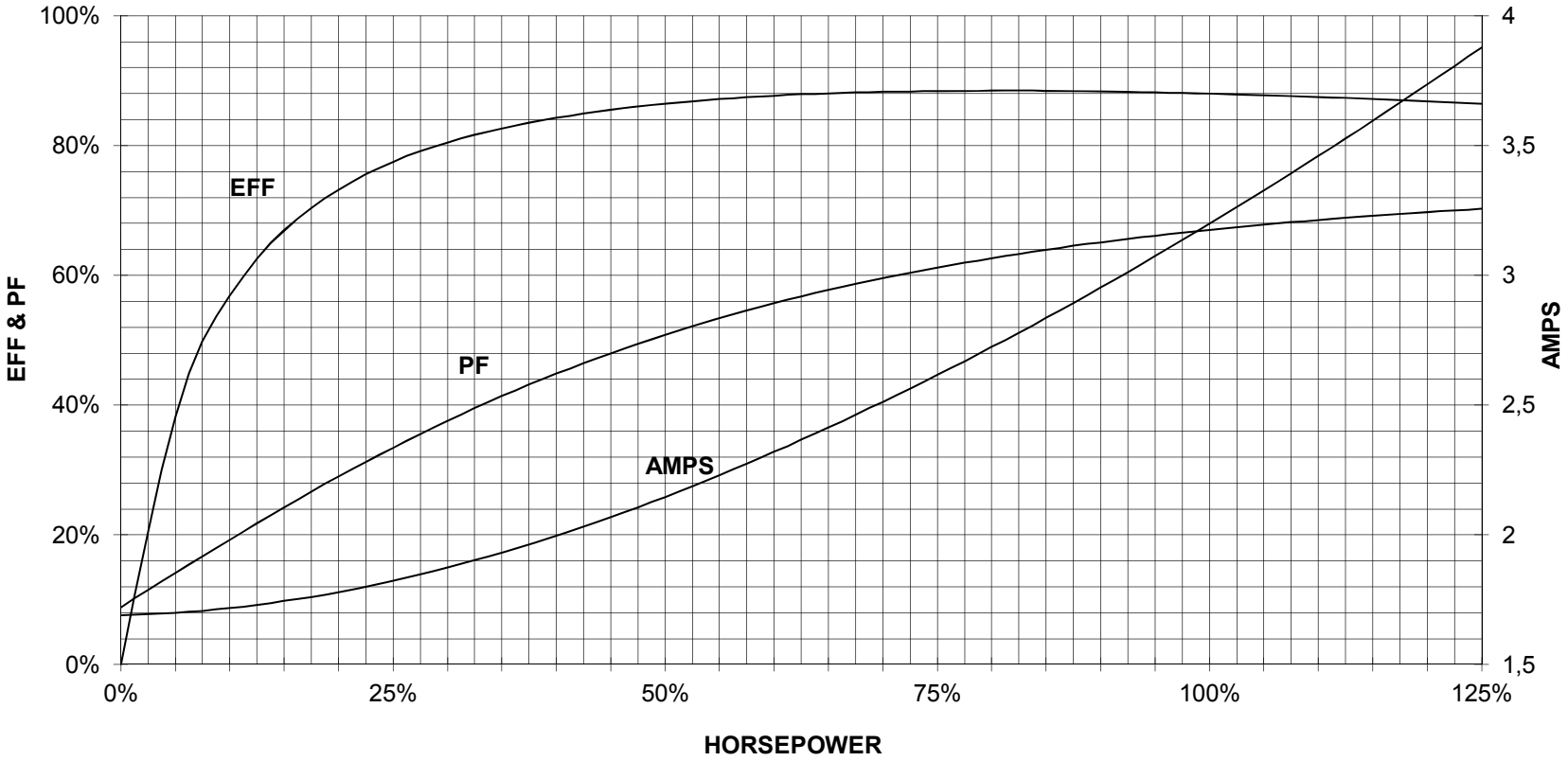

CUSTOMER_____ ORDER #_____ PO #_____

PERFORMANCE BASED ON DESIGN CALCULATIONS. SUBJECT TO CHANGE WITHOUT NOTICE.

REV. 1