Uncontrolled Copy

035565

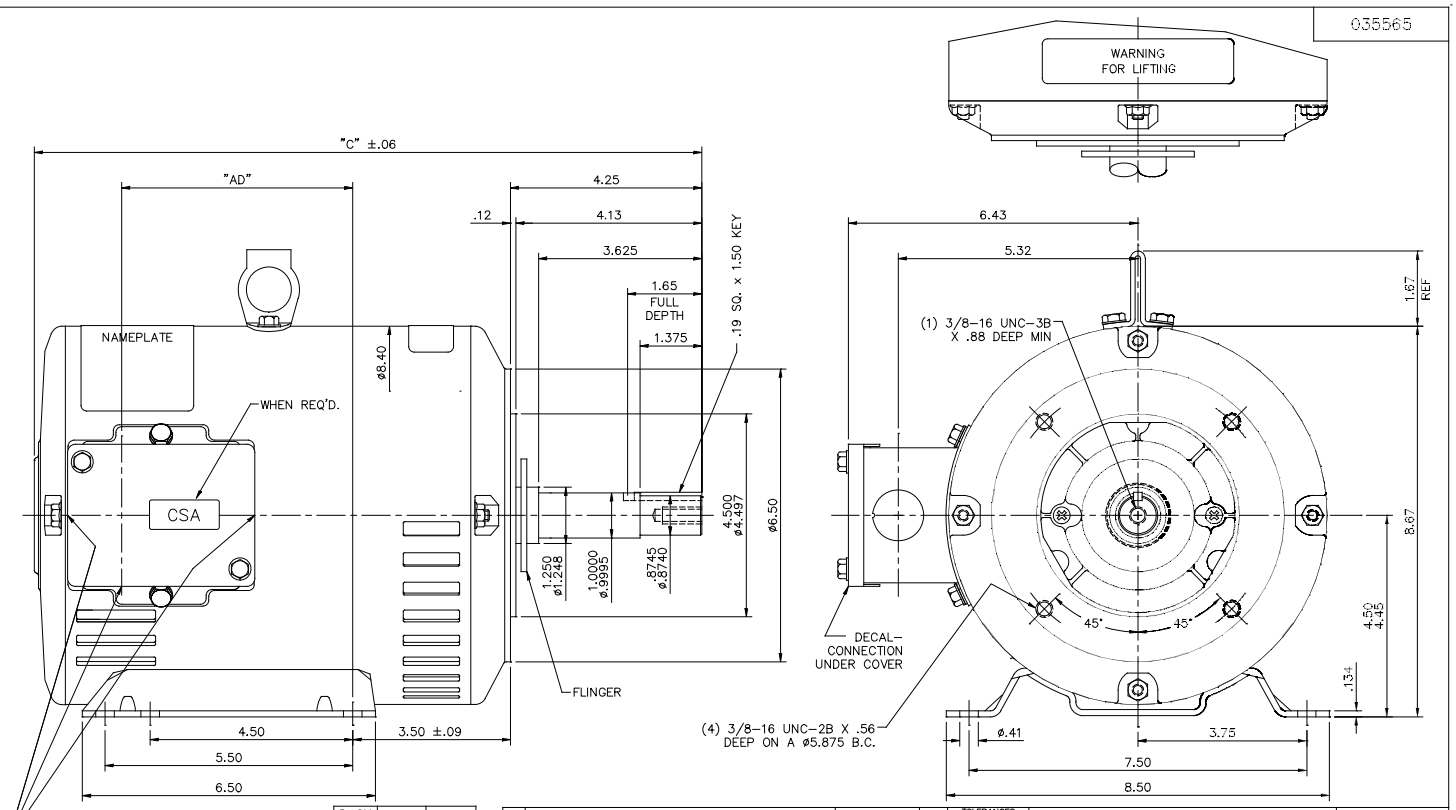

ø1.13 KNOCKOUTS
(3) REQUIRED

GASKETS THROUGHOUT
MAXIMUM FACE RUNOUT TO BE .004 T.I.R.
MAXIMUM PILOT ECCENTRICITY TO BE .004 T.I.R.
PERMISSIBLE SHAFT RUNOUT TO BE .004 T.I.R.

DASH NO.	"C"	"AD"
800	13.82	4.13
850	14.32	4.63
900	14.82	5.13
950	15.32	5.63
1000	15.82	6.13
1050	16.32	6.63
1100	16.82	7.13
1150	17.32	7.63

NO.	REVISION	BY & DATE	CHK	ANG
04	DRAWING UPDATED	SL 05/16/16	GR	
03	CSA WHEN REQ'D ADDED PER ECO-0045263	UD 02/11/14	GR	
02	REMOVED THE CE DECAL	SVL 6/11/2009	SVL	
01	REVISED C/B MOUNTING BOLT POSITION.	ST 3/24/2009	VV	

TOLERANCES UNLESS SPECIFIED

DEC.	INCHES
.X	±.1
.XX	±.03
.XXX	±.005
.XXXX	±.0005
ANG	±1/2°

MARATHON ELECTRIC

TITLE: OUTLINE – 180JM FRAME
DRIP PROOF – RIGID "C" – JM PUMP

MAT'L.
FINISH
CAD FILE 035565
RFP
DIST

DRAWN KVN 09/11/2007
CHK
APPD
SCALE 1=2
REF 035485
FMF 182TTDW7325
PREV

SIZE B
DRAWING NO. 035565
REV. 04

THIS DRAWING IN DESIGN AND DETAIL IS OUR PROPERTY AND MUST NOT BE USED EXCEPT IN CONNECTION WITH OUR WORK ALL RIGHTS OF DESIGN AND INVENTION ARE RESERVED
THIS IS AN ELECTRONICALLY GENERATED DOCUMENT – DO NOT SCALE THIS PRINT