SHEET 1 | REV 3 | 52A109601 | DRAWING NO. | SIZE A

THIRD ANGLE PROJECTION

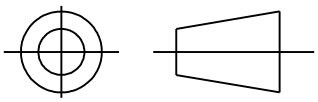

REVISIONS			
REV.	DESCRIPTION	DATE	APPROVED
2	ADDED SHELL VENTS.	03/25/94	M.D.PAPE
3	CHG TO RBC FORMAT PER IS05-1777	03/20/06	SUDHA

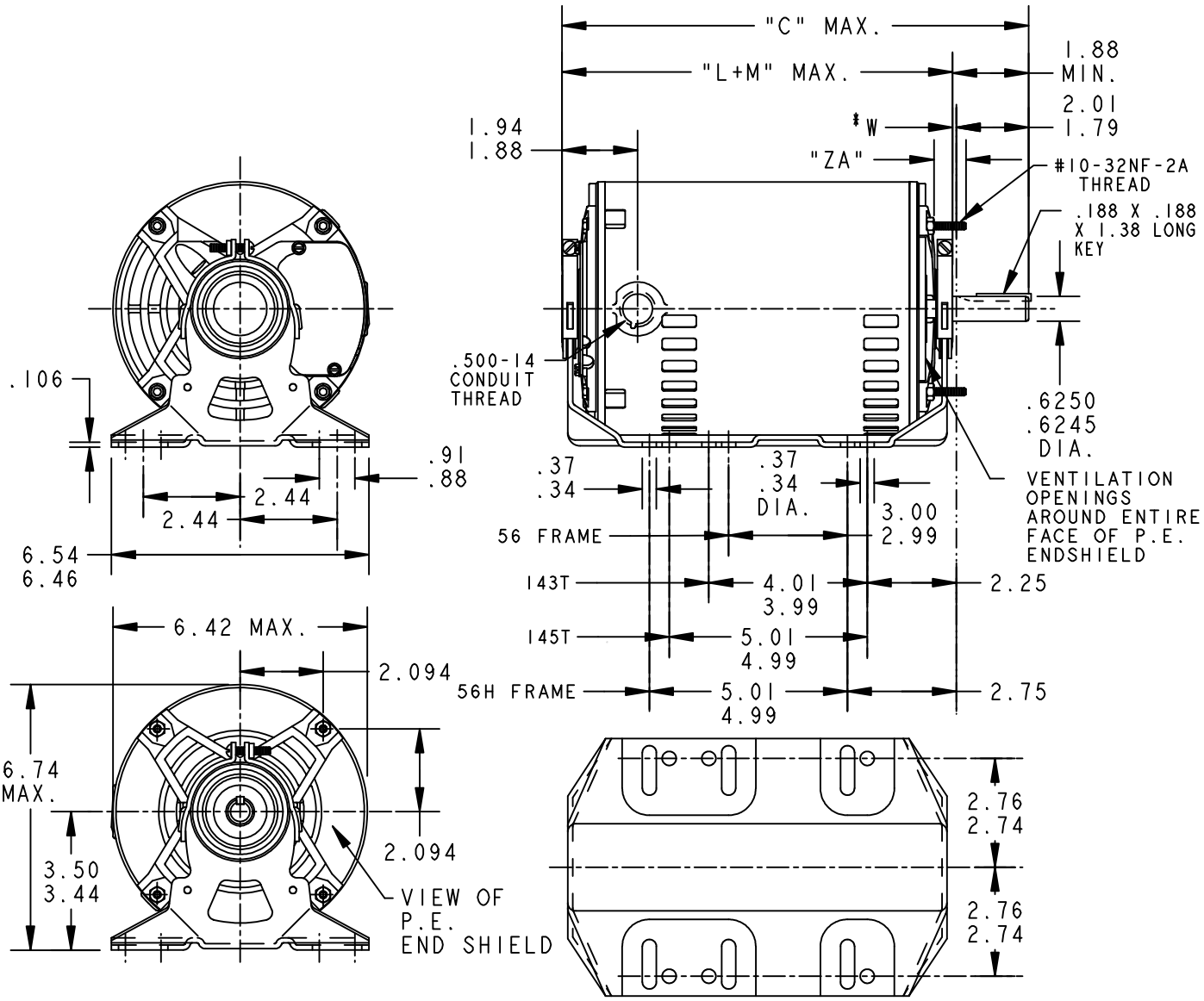

2	K	48	56H	12.76	10.76	8.43	.62
1	K	49	56H	13.96	11.96	9.63	.62
P	TYPE	GE SIZE	NEMA FR	C	L+M	SHELL MIN.	ZA

*W IS A VARIABLE CLEARANCE DUE TO VARIATIONS IN PARTS AND ASSEMBLY

SIGNATURES		DATE
MODEL	M.D.PAPE	03/23/94
DETAIL	.	.
CHECKED	.	.
ENGRG	.	.
MFG	.	.
QUALITY	.	.
ISSUED	M.D.PAPE	03/23/94

SOLID MODEL: 52A109601

FOR ADDITIONAL INFO REFER TO:
APPLIED PRACTICES .
DIMENSIONS ARE IN INCHES
MATERIAL .

REGAL-BELOIT CORPORATION

TITLE **OUTLINE**

GENERAL PURPOSE MOTOR - DRIP PROOF - BALL BEARING RESILIENT BASE - EXTENDED CLAMP SCREWS

SIZE A | DRAWING 52A109601 | REV 3

SCALE: 0.250 | REF. No: . | SHEET 1 OF 1

7/26/2011 7:57:53 AM