105937

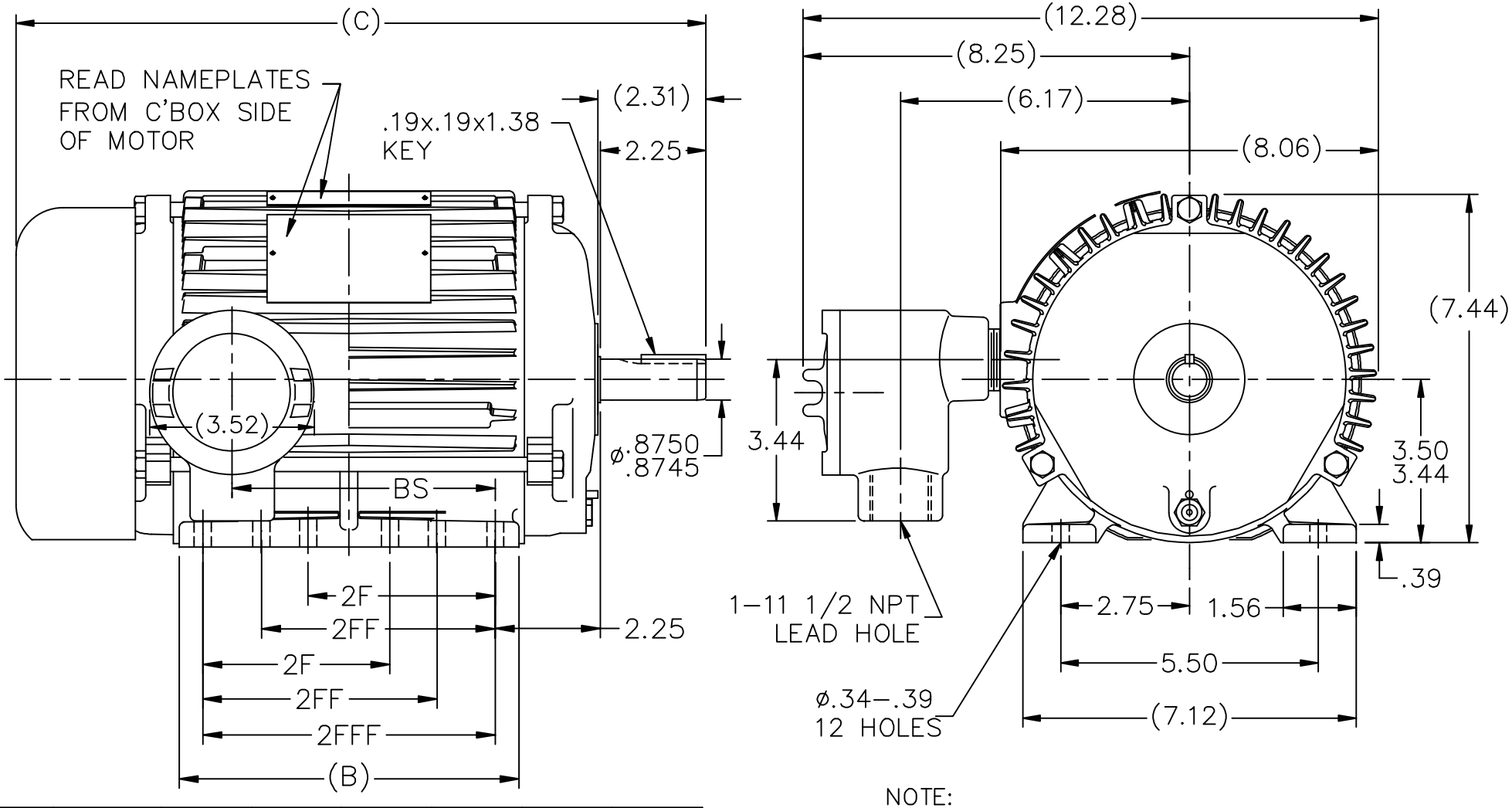

DASH	FR.	C	B	BS	2F	2FF	2FFF
750	143/5	14.73	7.25	5.62	4.00	5.00	6.25

NOTE:
1. BOX CAN ONLY BE ROTATED CLOCKWISE UP TO 270° FROM ITS ORIGINAL POSITION.

NO.	REVISION	BY & DATE	CHK
2	UPDATED PER ISAAC 11–4672	RFH 01/04/2012	EH
1	REISSUE, UPDATED TO CURRENT STDS.	RFH 12/02/2011	EH

TOLERANCES UNLESS SPECIFIED

DEC.	INCHES
.X	±.1
.XX	±.03
.XXX	±.005
.XXXX	±.0005
ANG	±7'30"

MARATHON ELECTRIC

TITLE OUTLINE
140 FR. – EXP.PR. – (629 NEW DESIGN)

MAT'L.

FINISH

CAD FILE 105937

RFP 02–24–2005

DIST WP

DRAWN	CDC	02–23–2005
CHK	ML	02–23–2005
APPD	CDC	02–24–2005
SCALE	5=16	
REF		
FMF		
PREV		

SIZE A | DRAWING NO. 105937 | PAGE OF | REV. 2