SS301093

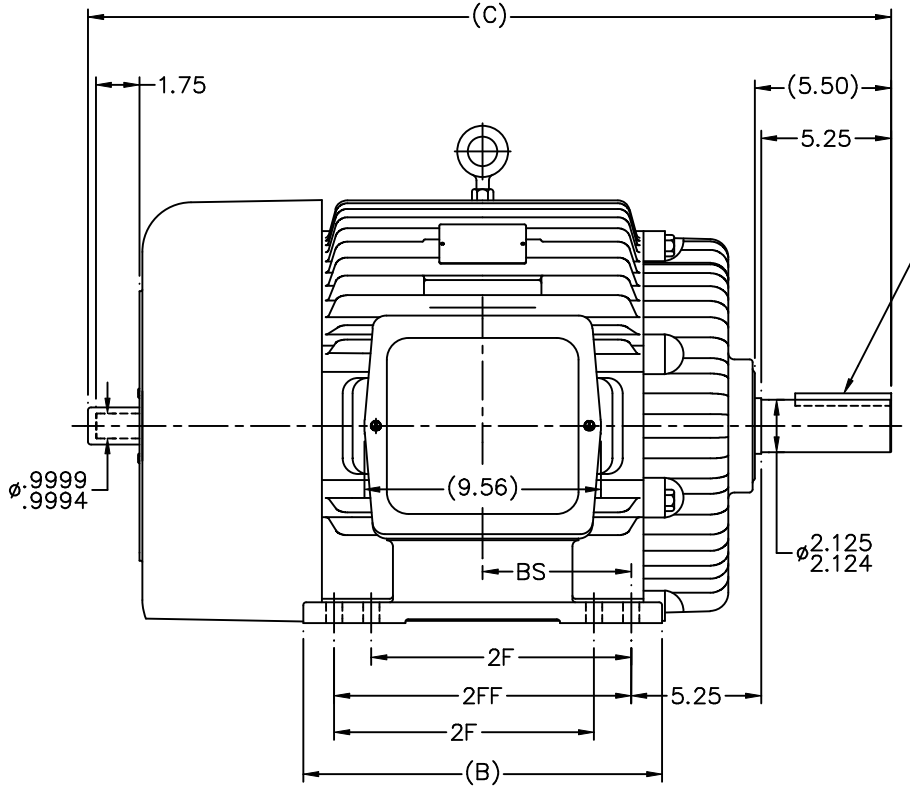

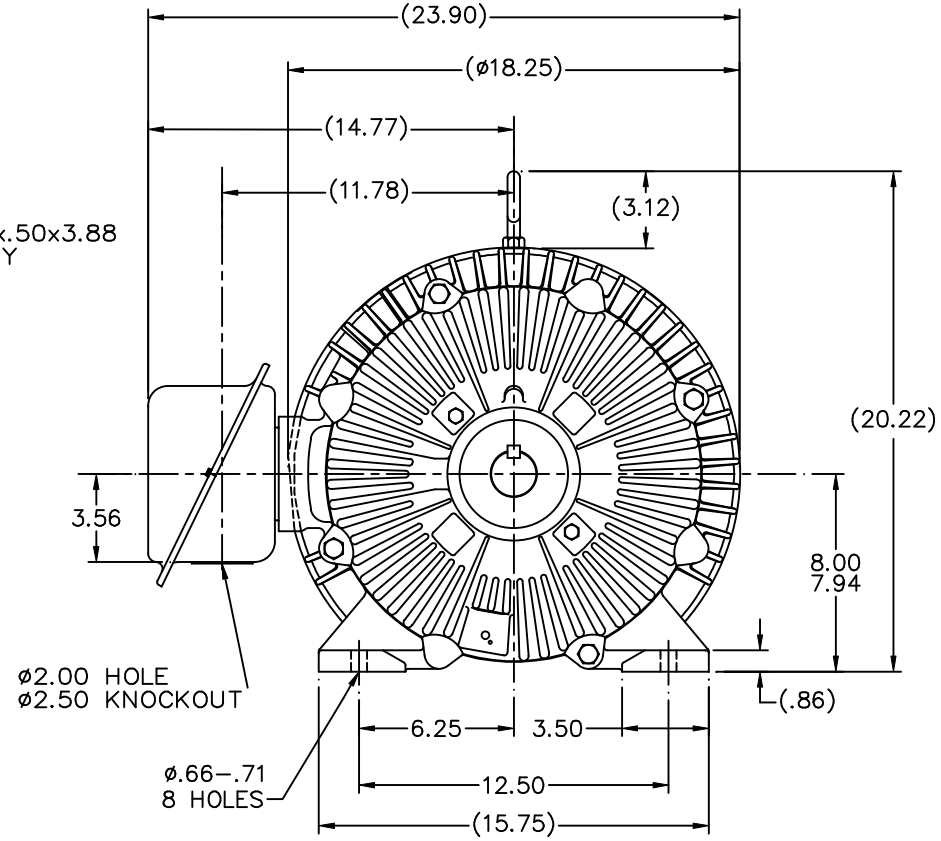

NOTES:
1. CONDUIT BOX CAN BE ROTATED IN 90° STEPS.
2. CONDUIT BOX CAN BE MOUNTED ON OPPOSITE SIDE BY REMOVING BRACKETS AND TURNING FRAME 180°.
3. NAMEPLATE TO BE READ FROM CONDUIT BOX SIDE OF MOTOR

DASH	FRAME	C	AG	B	2F	2FF	BS	REMARKS
1150	324T	30.94		13.00	10.50	---	5.25	
1300	326T	32.44		14.50	10.50	12.00	6.00	
1450	326T	33.94		15.00	12.00	13.50	6.75	4–11–07

NO.	REVISION	BY & DATE	CHK
2	RE–ISSUED: ADDED (C) DIM. THAT WAS MISSING	ERH 10–08–2003	ML
1	NEW DRAWING MU43691	HLB 11–04–2002	HLB

TOLERANCES UNLESS SPECIFIED

DEC.	INCHES
.X	±.1
.XX	±.03
.XXX	±.005
.XXXX	±.0005
ANG	±7'30"

MARATHON ELECTRIC

TITLE OUTLINE – TEFC
320T – B – TS – STEEL C'BOX

MAT'L.
FINISH
CAD FILE ss301093
RFP
DIST LB

SIZE B
DRAWING NO. SS301093
PAGE OF
REV. 2

DRAWN HLB 11–01–2002
CHK ML 11–04–2002
APPD DD 11–04–2002
SCALE 1=5
REF
FMF
PREV

THIS DRAWING IN DESIGN AND DETAIL IS OUR PROPERTY AND MUST NOT BE USED EXCEPT IN CONNECTION WITH OUR WORK ALL RIGHTS OF DESIGN AND INVENTION ARE RESERVED
THIS IS AN ELECTRONICALLY GENERATED DOCUMENT – DO NOT SCALE THIS PRINT