100086

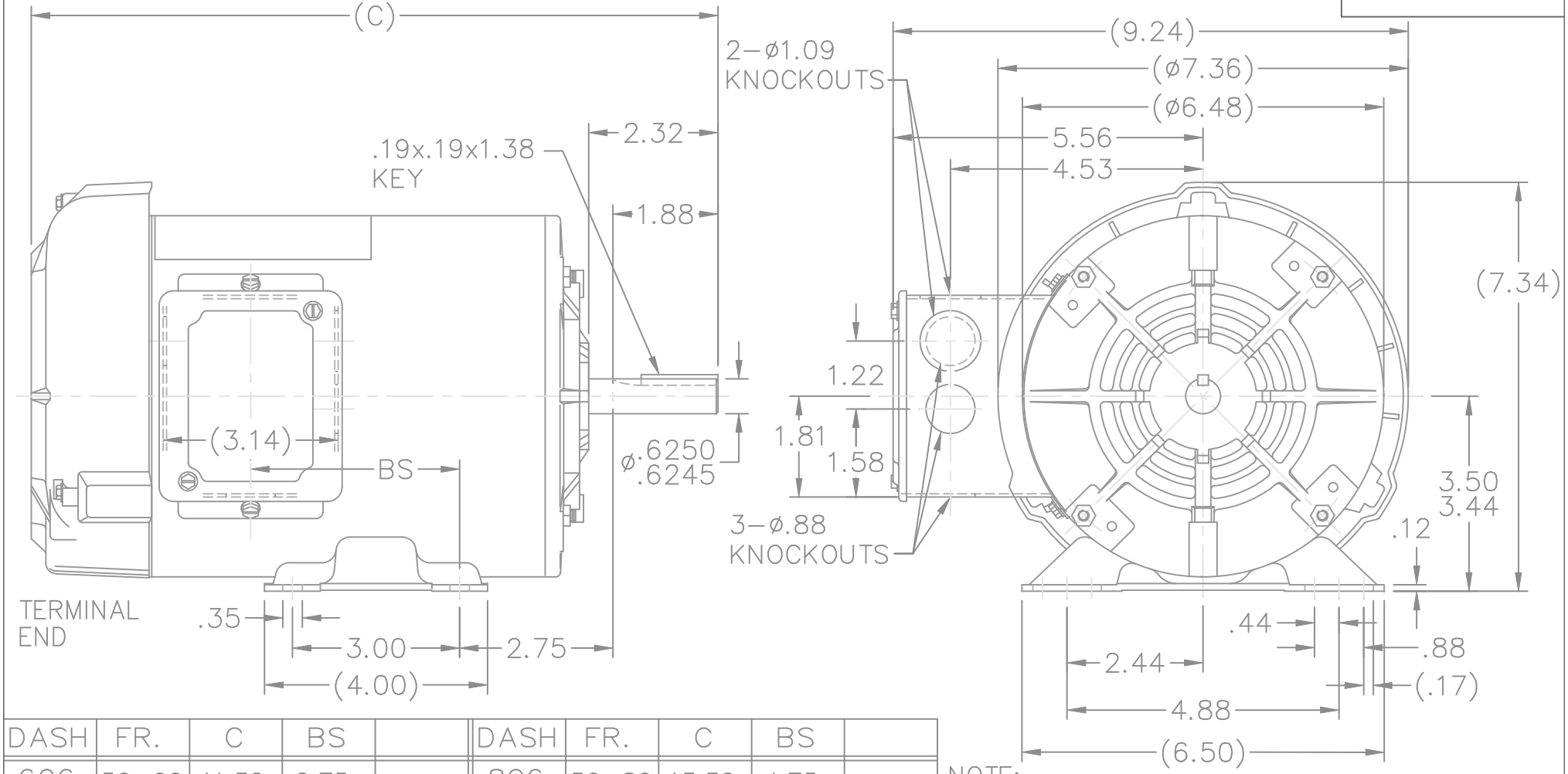

DASH	FR.	C	BS		DASH	FR.	C	BS	
606	56–60	11.32	2.75		806	56–80	13.32	4.75	
656	56–65	11.82	3.25		856	56–85	13.82	5.25	
706	56–70	12.32	3.75		906	56–90	14.32	5.75	
756	56–75	12.82	4.25						

NOTE:
1. NAMEPLATE READ FROM CONDUIT BOX SIDE.
2. CONDUIT BOX CAN BE ROTATED IN 180" STEPS.

NO.	REVISION	BY & DATE	CHK
6	RE–ISSUE CHANGED SHAFT DIA.	TAT 08–31–2004	ML
5	REDRAWN IN AUTOCAD	TAT 06–29–2004	ML
4	ADDED SHAFT DIA. CN 29200–405	TJB 05–11–2000	
3	REDRAWN ON CADD	DJK 04–20–1993	

TOLERANCES UNLESS SPECIFIED	
DEC.	INCHES
.X	±.1
.XX	±.03
.XXX	±.005
.XXXX	±.0005
ANG	±7'30"

MARATHON ELECTRIC

TITLE OUTLINE
56 FR. – TEFC

MAT'L.

FINISH

CAD FILE 100086

RFP

DIST WP

DRAWN	DJK 04–19–1993
CHK	ML 04–20–1993
APPD	MJ 04–20–1993
SCALE	3=8
REF	
FMF	
PREV	

SIZE	DRAWING NO.	PAGE OF	REV.
A	100086		6

9/27/2008 5:51:02 AM