WEG Standard Product Catalog

Motors, Enclosed Motor Controls, Gears and Alternators

US100 - 5.14.2019

What's NEW

Wash Down Duty Motors page A-123

HydroDuty™

PickerPlus™

HydroWash™

Toughest, Longest Lasting Motors for Washdown Applications

Medium Voltage

page A-262

W50

The New Generation of WEG Motors for Heavy Duty Applications

IN STOCK!

Farm Duty Motors

page A-241

Grain Dryer/Vane Axial Fan

Aeration Fan

Auger Drive Motor

Irrigation Motors

WEG offers a complete line of TEFC Farm Duty motors providing high starting torque for the most demanding applications.

Alternators

page A-276

DC Motors

page A-280

Speed Reducers

page A-287

Enclosed Motor Controls

page A-292

Low and Medium Voltage

1-800-ASK-4WEG | www.weg.net

Single-Phase General Purpose Motors - (A-17)

TEFC – Foot Mount . . . A-19
TEFC – C-Face – Foot Mount . . . A-21
TEFC – C-Face – Footless . . . A-22
TEFC – Foot Mount – Thermally Protected . . . A-22
ODP – FootMount . . . A-23
ODP – Resilient Base . . . A-24
ODP – C-Face – Foot Mount . . . A-25
ODP – C-Face – Footless . . . A-26
ODP – Foot Mount – Thermally protected . . . A-26

Three-Phase General Purpose Motors - (A-28)

TEFC – Foot Mount . . . A-32
TEFC – C-Face – Foot Mount . . . A-42
TEFC – C-Face – Footless . . . A-46
ODP – Foot Mount . . . A-50
ODP – C-Face – Foot Mount . . . A-56
ODP – C-Face – Footless . . . A-60
ODP – Resilient Base . . . A-60

IEEE 841 - Three-Phase

TEFC – Foot Mount – NEMA Premium® . . . A-62
TEFC – C-Face – Foot Mount – NEMA Premium® . . . A-66
TEFC – C-Face – Footless – NEMA Premium® . . . A-67

BRAKE MOTORS – Three-Phase

TEFC – Foot Mount - Cast Iron . . . A-69
TEFC – C-Face – Foot Mount - Cast Iron . . . A-70
TEFC – Foot Mount - Rolled Steel . . . A-71
TEFC – C-Face – Foot Mount - Rolled Steel . . . A-72
TEFC – C-Face – Footless - Rolled Steel . . . A-72

IEC TRU-METRIC™ - Three-Phase

TEFC – Foot Mount . . . A-75

Super Premium Efficiency Motors - (A-79)

GENERAL PURPOSE - Three-Phase

TEFC – Foot Mount – Super Premium . . . A-80

Severe Duty – Three-Phase Motors - (A-83)

GENERAL PURPOSE

TEFC – Foot Mount . . . A-86
TEFC – C-Face – Foot Mount . . . A-93
TEFC – C-Face – Footless . . . A-95

IEEE 841

TEFC – Foot Mount . . . A-97
TEFC – C-Face – Foot Mount . . . A-101
TEFC – C-Face – Footless . . . A-102

CRUSHER DUTY

TEFC – Foot Mount . . . A-105

VECTOR DUTY

TENV – Foot Mount – Double C-Face . . . A-107

IEC TRU-METRIC™

TEFC – Foot Mount IE3 . . . A-109

Continued on next page

Data subject to change without notice.

Table of Contents

SECTION A

Explosion Proof Motors - (A-111)

SINGLE-PHASE

Foot Mount A-113
C-Face – Foot Mount A-113

THREE-PHASE

Foot Mount A-115
C-Face – Foot Mount A-119
C-Face – Footless A-120
JP – Foot Mount A-120
ATEX Foot Mount A-123

Wash Down Duty - (A-126)

HYDRODUTY™ - STAINLESS STEEL

TEFC - Three-Phase - C-Face Foot Mount A-129
TENV - Three-Phase - C-Face Foot Mount A-129
TEFC – Three-Phase C-Face Footless A-130
TENV – Three-Phase C-Face Footless A-130

PICKERPLUS™ - WHITE EPOXY

TEFC - Three-Phase - C-Face Foot Mount A-131
TEFC – Three-Phase C-Face Footless A-131

SHARK™ - STAINLESS STEEL

TEFC - Three-Phase - C-Face Foot Mount A-132
TENV - Three-Phase - C-Face Foot Mount A-132
TEFC – Three-Phase C-Face Footless A-133
TENV – Three-Phase C-Face Footless A-133

HYDROWASH™ - WHITE EPOXY

TEFC - Three-Phase - C-Face Foot Mount A-134
TENV - Three-Phase - C-Face Foot Mount A-134
TEFC – Three-Phase C-Face Footless A-134
TEFC – Three-Phase C-Face Footless A-134

WASHDOWN DUTY VARIABLE FREQUENCY DRIVE

CFW08 Washdown VFD - NEMA 4X Enclosure A-137
CFW08 Options and Accessories A-138
Dynamic Braking Resistors for CFW08 Wash A-139
CFW08 Technical Data A-140

Fractional Motors - (A-141)

SINGLE-PHASE

TEFC – Foot Mount A-144
TEFC – C-Face – Foot Mount A-145
TEFC – C-Face – Footless A-145
TEFC – Foot Mount – Thermally Protected A-146
ODP – Foot Mount A-147
ODP – Resilient Base A-148
ODP – C-Face – Foot Mount A-149
ODP – C-Face – Footless A-150
ODP – Foot Mount – Thermally Protected A-150

THREE-PHASE

TEFC – Foot Mount A-151
TEFC – C-Face – Foot Mount A-152
TEFC – C-Face – Footless A-153
ODP – Foot Mount A-154
ODP – C-Face – Foot Mount A-155
ODP – C-Face – Footless A-156
ODP – Resilient Base A-156

Data subject to change without notice.

Fractional Motors - *continued*

DC MOTORS

NEMA 56 PMDC Motors A-157
NEMA 145TC PMDC Motors A-157

EXPLOSION PROOF - SINGLE-PHASE

Foot Mount A-159
C-Face – Foot Mount A-159

EXPLOSION PROOF - THREE-PHASE

Foot Mount A-160
C-Face – Foot Mount A-160

Air Handling Motors - (A-161)

COMMERCIAL HVAC MOTORS

TEFC – Single-Phase – Foot Mount A-163
TEAO – Single-Phase – Resilient Base A-163
TEAO – Single-Phase – Foot Mount A-163
ODP – Single-Phase – Foot Mount A-164
ODP – Single-Phase – Resilient Base A-165
ODP – Three-Phase – Resilient Base A-166
ODP – Single-Phase – Evaporative Cooler A-166

HVAC MOTORS - WITH INTERNAL AEGIS® SGR

TEFC – Three-Phase – Foot Mount A-167
ODP – Three-Phase – Foot Mount A-171

COOLING TOWER MOTORS – THREE-PHASE

TEFC – Three-Phase – Foot Mount – NEMA Premium® A-175
TEAO – Three-Phase – Foot Mount – NEMA Premium® A-178
TEFC – Three-Phase – Double Speed (1 & 2 Windings) – High Efficiency A-180

PAD MOUNT MOTORS – Three-Phase

TEAO – NEMA Premium® A-184

Pump Motors - (A-185)

JET PUMP SINGLE-PHASE (56C/56J FRAMES)

TEFC – Foot Mount A-187
TEFC – Footless A-187
ODP – Foot Mount A-188
ODP – Footless A-188

JET PUMP THREE-PHASE (56C/56J FRAMES)

TEFC – Foot Mount A-189
TEFC – Footless A-189
ODP – Foot Mount A-190
ODP – Footless A-190

POOL & SPA SINGLE-PHASE MOTORS

ODP – C-Face – Start Capacitor – High Service Factor A-192
ODP – Square Face – Start Capacitor – High Service Factor A-192
ODP – C-Face – Start Capacitor – Low Service Factor A-193
ODP – Square Face – Start Capacitor – Low Service Factor A-193

Continued on next page

SECTION A

Pump Motors - *continued*

CLOSE-COUPLED PUMP TEFC MOTORS

JM – TEFC – Single-Phase A-194
JP – TEFC – Single-Phase A-195
JM – TEFC – Three-Phase A-197
JP – TEFC – Three-Phase A-201
JP – TEFC – Explosion Proof A-204

CLOSE-COUPLED PUMP ODP MOTORS

JM – ODP – Single-Phase A-205
JP – ODP – Single-Phase A-205
JM – ODP – Three-Phase A-206
JM – ODP – Three-Phase – Footless Vertical A-209
JP – ODP – Three-Phase A-210
JP – ODP – Three-Phase – Footless Vertical A-213

CLOSE-COUPLED PUMP TEFC MOTORS - WITH INTERNAL AEGIS® SGR

JM – TEFC – Three-Phase A-215
JP – TEFC – Three-Phase A-216

CLOSE-COUPLED PUMP ODP MOTORS - WITH INTERNAL AEGIS® SGR

JM – ODP – Three-Phase A-217
JP – ODP – Three-Phase A-218

FIRE PUMP MOTORS

ODP – Three-Phase A-220
ODP – Three-Phase – C-Face A-222
ODP – Three-Phase – JM - Footless Vertical A-223
ODP – Three-Phase – JP - Footless Vertical A-224
TEFC (50Hz) – Three-Phase – IE2 . . . . . A-226

P-BASE MOTORS

TEFC – Three-Phase – NEMA Premium® A-228

IEC Motors - (A-231)

TRU-METRIC™

TEFC – Foot Mount A-233

ATEX MOTORS

TEFC – Ex nA A-238
TEFC – Ex d – IE2 . . . . . A-243

Farm Duty Motors - (A-245)

TEFC – Single-Phase – General Purpose – Foot Mount A-247
TEFC – Single-Phase – Auger Drive – Footless A-248
TEAO – Single-Phase – Poultry Fan – Foot Mount A-248
TEAO – Single-Phase – Poultry Fan – Resilient Base A-248
TEAO – Three-Phase – Grain Dryer/Vane Axial Fan A-249
TEAO – Single-Phase – Grain Dryer/Vane Axial Fan A-249
TEAO – Single-Phase – Aeration Fan A-249
TEAO – Three-Phase – Aeration Fan A-249
TEFC – Single-Phase – C-Face - Foot Mount - Irrigation Duty A-250
TEFC – Three-Phase – C-Face - Foot Mount - Irrigation Duty A-250
Irrigation Drive Motors A-251
Jet End Booster Pump Motors A-251

Continued on next page

Data subject to change without notice.

Definite Purpose Motors - (A-252)

VECTOR DUTY MOTORS

TENV – Three-Phase – Foot Mount – Double C-Face A-253

OIL WELL PUMPING – ODP & TEFC

TEFC – Three-Phase – NEMA Design 'D' A-256
ODP - Three-Phase - NEMA Design 'D' A-256

COMPRESSOR DUTY MOTORS

ODP – Single-Phase – Foot Mount A-258
ODP – Three-Phase – Foot Mount – NEMA Premium® A-259

HYDRAULIC PUMP MOTORS

TEFC – Three-Phase – SAE-A – High Efficiency A-260

BRAKE MOTORS

TEFC – Foot Mount - Cast Iron A-262
TEFC – C-Face – Foot Mount - Cast Iron A-263
TEFC – Foot Mount - Rolled Steel. A-264
TEFC – C-Face – Foot Mount - Rolled Steel A-265
TEFC – C-Face – Footless - Rolled Steel A-265

SAW ARBOR MOTORS

TEFC – Three-Phase – Right-Hand Thread A-266
TEFC – Three-Phase – Left-Hand Thread A-266

SOOT BLOWER MOTORS

TEFC – C-Face – Footless A-267

Medium Voltage Motors and Soft Starters (A-268)

W22 Severe Duty Motors – TEFC

W22 Medium Voltage Motors – TEFC 2300 – 4160V A-270
W22 Medium Voltage Motors – TEFC Add-On Modifications A-271

W22 Medium Voltage 2300V - Electrical Data A-272
W22 Medium Voltage 4160V - Electrical Data A-274
Mechanical Data A-276
Medium Voltage Worksheet. A-280
SSW7000C Medium Voltage Soft Starter A-281

Synchronous Alternators - (A-282)

G Plus Line A-283
AG10 Line. A-284
Modifications A-285

DC Motors and Gearmotors - (A-286)

Permanent Magnet DC Motors

Brushes for RAE "MT" Motors A-286
NEMA 56 PMDC Motors A-287
NEMA 145TC PMDC Motors A-287
M1600 Permanent Magnet Motor - 2.375" diameter. A-288
M4000 Permanent Magnet Motor - 3.12" diameter A-288
Mechanical Data A-289

Parallel Shaft Gearmotors

GIL 100 Series Gearbox A-290
GIL 200 Series Gearbox A-291

Right Angle Gearmotors

G33 Series Single Worm Reduction A-292

Continued on next page

SECTION A

Speed Reducers - (A-293)

How to Order Information A-294
TG-90™ Right Angle Gearmotor A-295
Mechanical Data A-296

Variable Frequency Drives and Enclosed Motor Controls - (A-298)

(for complete line of products see WEG's Automation Catalogs)

CFW300 Variable Frequency Drive A-301
CFW500 Variable Frequency Drive A-306
CFW700 Variable Frequency Drive A-313
CFW08 Wash - Washdown Duty VFD A-323
EDP11 - Enclosed VFD Panel A-329
EDP11 - Enclosed VFD Panel - Dimensions A-337
GPH2 - Combination Soft Starter A-341
GPH2 - Combination Soft Starter - Dimensions A-345
ESW Non-Combination Across the Line Starters - Enclosure Type 1 . . . . . A-351
ESWS Starters and Field Mod Kits A-353
ESW Wiring Diagram and Dimensions A-354
PESW Non-Combination Across the Line Starters - Enclosure Type 4X - Three Phase A-356
PESW Non-Combination Across the Line Starters - Enclosure Type 4X - Single Phase A-358
PESW Wiring Diagram and Dimensions A-359
ESWC Combination Type-C Across the Line Starter without CPT A-362
ESWC Combination Type-C Across the Line Starter with CPT A-363
ESWE Combination Type-E Across the Line Starter Enclosure Type 4X - without CPT A-364
ESWE Combination Type-E Across the Line Starter Enclosure Type 4X - with CPT A-364
ESWF Combination Type-F Across the Line Starter Enclosure Type 4/12 - without CPT A-365
ESWF Combination Type-F Across the Line Starter Enclosure Type 4/12 - with CPT A-366
Dimensional Data A-367
ESWX-M16 Series Explosion Proof Manual Motor Starters A-370
ESWX-M25 Series Explosion Proof Manual Motor Starters A-371
ESWX-M65 Series Explosion Proof Manual Motor Starters A-371
ESWX-M100 Series Explosion Proof Manual Motor Starters A-371
Accessories A-372
ESWX NEMA 7/9 Series Explosion Proof Manual Motor Starters A-373
ESWX Dimensional Data A-374
Custom Control Panels Data Worksheet and Request for Quote A-377

Medium Voltage Starters

SSW7000 - 2300V and 4160V A-380
SSW7000 Options A-381
SSW7000 Dimensions A-381
SSW7000 Technical Data A-382

Add-On Modifications and Parts - (A-384)

In-House Modifications A-385
Factory Built Modifications A-389
Parts A-393

Data subject to change without notice.

For Electrical and Mechanical Data please log-in to WEG EASY
Quick Links @ www.weg.net

For complete line of Automation Products see WEG's Automation Catalogs
Quick Links @ www.weg.net

Single-Phase General Purpose Motors
Three-Phase General Purpose Motors
Super Premium Efficiency Motors
Severe Duty - Three-Phase Motors
Explosion Proof Motors
Alternators
DC Motors and Gearmotors
Speed Reducers
Variable Frequency Drives and Enclosed Motor Controls
Parts & Modifications
Electrical Data
Mechanical Data
Catalog Index
Wash Down Duty
Fractional Motors
Air Handling Motors
Pump Motors
IEC Motors
Farm Duty Motors
Definite Purpose Motors
Medium Voltage Motors and Soft Starters

W22 Severe Duty Motors – TEFC

Components Design

Optimal Cooling System

Fan Cover
- Aerodynamic design
- Minimal noise levels
- Superb air flow distribution over frame
- Superior mechanical strength

Fan
- Reinforced fan hub structure
- Low noise design with exceptional air flow

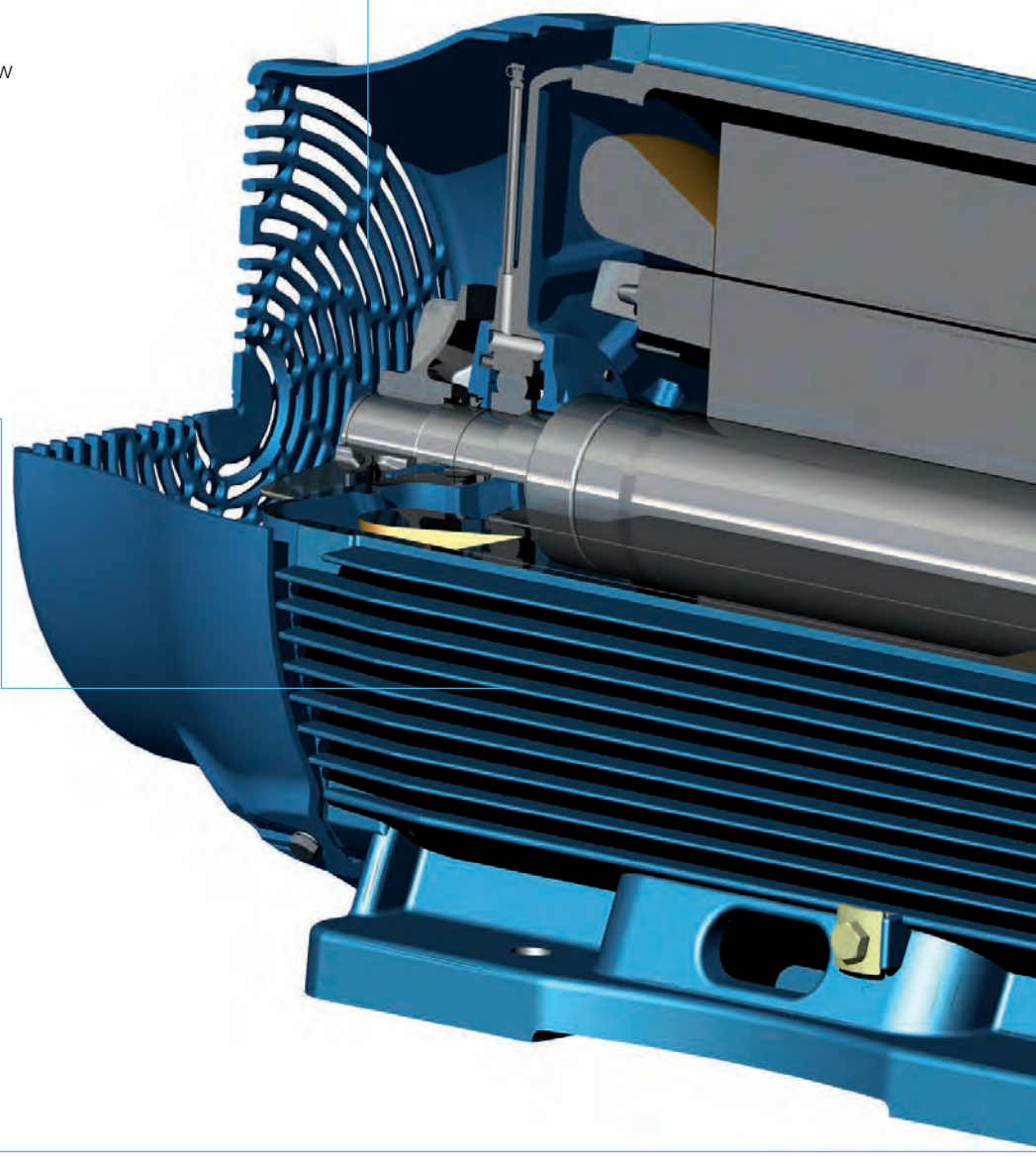

Frame
- Terminal box position outlet on top 447T and larger
- Low temperature on windings and bearings
- Low noise design

Pad for vibration sensor
- Displaced 90^0 from each other

Enhanced Lifting Provisions
- Easy handling - horizontal & vertical
- Superior mechanical strength and handling safety

Solid feet
- Impact resistance
- Ideal for high vibration level applications

Endshields Subsystem

DE (Drive Endshield)
- Fin design increases air flow
- Bearing moved outwards for better load support
- Bearing heat dissipation for reduced bearing temperature
- Reinforced endshield structure

NDE (Non-Drive Endshield)
- Smooth exterior surface
- Optimal air flow
- Designed for low noise
- Structural rigidity for low vibration
- Insulated housing standard on L447/9T and above

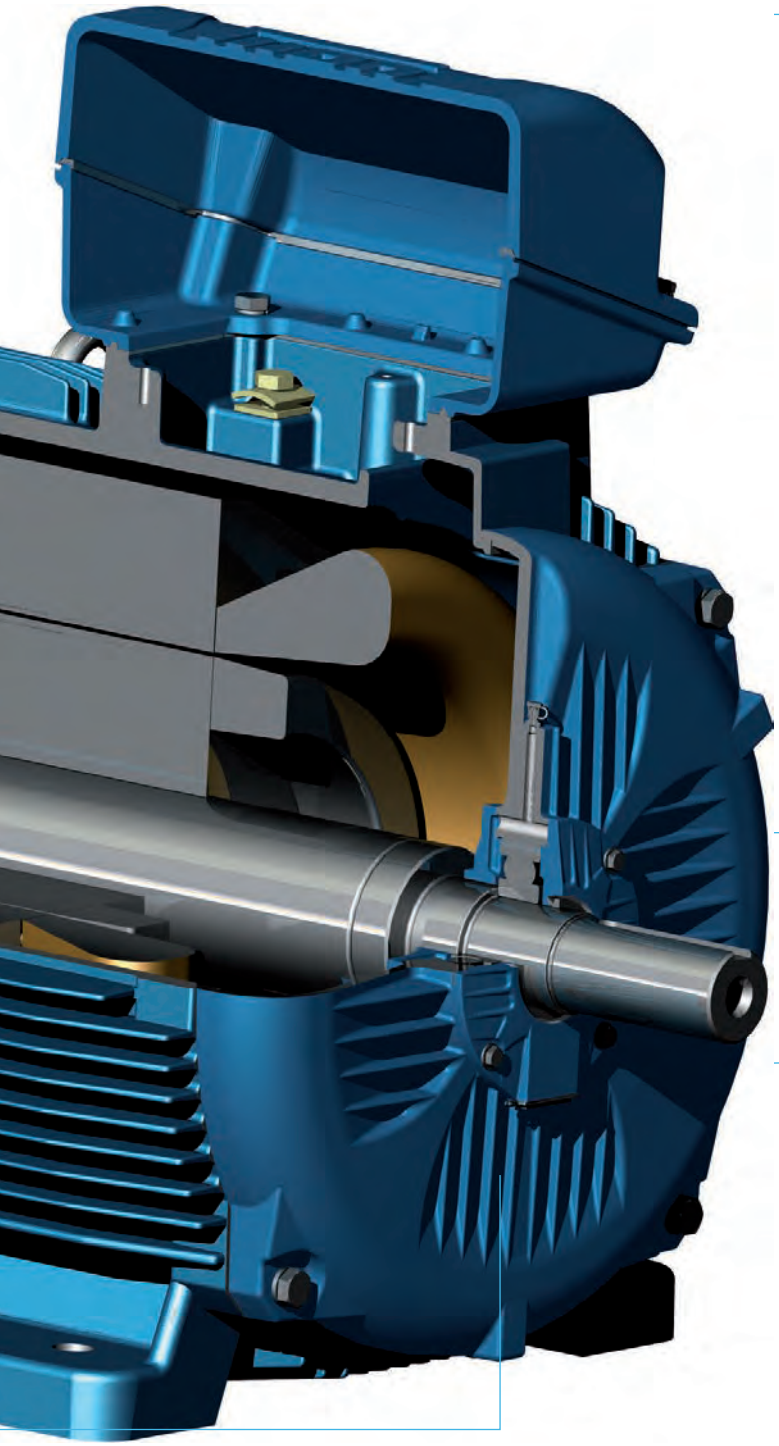

Terminal Box

- Excellent connection quality
- Easy cable handling during installation
- Ample space available for accessory installation
- Easy to maintain
- Mounting F1/F2
- F3 Mounting optional on ≤445T
- F3 Mounting field modifiable 447T and larger
- Rotation on 90° stages

Bearing Caps

External

- Finned surface for superb bearing heat dissipation

Internal

- Positive pressure lubrication system
- High quality bearing lubrication
- Reduced bearing temperature

Seal Subsystem

- Excellent dust and moisture protection
- Excellent protection to high-pressure cleaning

Warranty Policy

No-Fault Warranty (excludes Washdown motors)

Motors with frame sizes 215T and smaller are covered under a "No-Fault" warranty. This warranty claim is offered one time, per end-user, per application. If there is more than one failure, please contact the Service Department for review. The following must be sent to the WEG Service Department to process a "No-Fault" warranty claim.

- Original nameplate from the failed motor
- Copy of the original WEG invoice or invoice # for the failed motor
- Brief description of the failure for quality control purposes
- Please send request no later than 30 days after failure.

Warranty on Larger Motors

WEG Electric requires that motors larger than 215T frame be inspected by a WEG Authorized Service Center, or if none is available, an EASA-affiliated service shop. Depending on the inspection results, WEG will decide whether to cover the motor under warranty. Prior to a decision being made on a claim for warranty, the following are required from the service shop and customer.

- Completed EASA inspection report
- Repair Quote
- Copy of the original WEG Invoice or WEG Invoice Number
- For Frame 215T and above, photos of the failure in JPEG format suitable for e-mailing

The inclusion of photos allows WEG to properly evaluate the details of your claim, as well as to ensure that any data sent to our factory Quality Control engineers are fully understood. The warranty claim will be evaluated after receipt of the above items. Upon review of the claim, the WEG Service Department will make contact and advise how to proceed. The service shop should not remove the nameplate nor make repairs without being requested to do so by a WEG Service Department representative.

NOTE: For all Ingersoll-Rand motors, please contact the WEG Service Department prior to any inspection.

Warranty on Washdown Motors:

HydroDuty™, PickerPlus™, HydroWash™and Shark™

The warranty coverage period on these models is 12/24: 12 months from date of first installation or 24 months from the date on motor nameplate, whichever occurs first.

Any warranty claim submitted to the WEG Service Department must include:

- Copy of the original WEG invoice or invoice number for the failed motor
- Brief description of the failure for quality control purposes accompanied by photographs of the motor wire connections and any other photograph supporting the claimed failure

WEG Service Department will analyze the claim, along with the supporting documents and determine if the warranty is applicable. When warranty is granted and credit or replacement is determined, it will be executed once the terminal box cover of the failed motor is submitted and received at the WEG Service Department.

Communication

Correspondence with the WEG Service Department may be via e-mail, fax or regular mail. Please keep a photocopy of all nameplates for your records.

Limited Warranty:

WEG Electric Corp. is proud of all of our product lines. WEG and its employees are committed to our customers and users to provide the best designed and manufactured motors, drives and controls. WEG provides a limited warranty on our products against defects in materials and workmanship for a specific period from the date of purchase. If a motor's date code is within its stated warranty period (18 month, 36 month, etc.), no proof of purchase is required. Otherwise, a copy of the invoice is necessary to show the date of purchase.

Warranty Period:

- The standard warranty for WEG products is 18 months from the invoice date.
- For General Purpose TEFC and ODP Premium Efficiency motors the warranty is 36 months from the invoice date.
- For IEEE 841 motors, the warranty is 60 months from the invoice date.

Authorized Service Centers:

WEG has service centers around the world to meet the needs of our customers. Information regarding the nearest service center can be found on our web site at **www.weg.net** or by calling **1-800-ASK-4WEG** (1-800-275-4934). Any warranty repair by a service shop must be pre-approved by WEG.

Warranty Service:

If a WEG product requires warranty service due to defective materials or workmanship, WEG will, at its option, either repair or replace the defective product. By "replace", WEG means the original purchaser's account will be credited for the cost on the WEG invoice (less freight). If warranty is granted, and replacement is specified, the motor's nameplate must be sent to the Service Dept. Warranty is applied to products that have been, at all times, properly maintained and operated or used under normal operating conditions for which the product was designed. WEG is not responsible for any expenses incurred in installation, removal from service, transportation (freight) or consequential expenses.

Limitation of Warranty:

THE FOREGOING WARRANTIES ARE EXCLUSIVE AND IN LIEU OF ALL OTHER WARRANTIES OF QUALITY AND PERFORMANCE, WRITTEN, ORAL OR IMPLIED, AND ALL OTHER WARRANTIES INCLUDING ANY IMPLIED WARRANTIES OF MERCHANTABILITY OR FITNESS FOR A PARTICULAR PURPOSE OR ARISING FROM COURSE OF DEALING OR USAGE OF TRADE ARE HEREBY DISCLAIMED BY WEG. THE FOREGOING OBLIGATION TO REPAIR OR REPLACE WEG PRODUCTS OR PARTS SHALL BE THE SOLE AND EXCLUSIVE REMEDY OF THE PURCHASER, ITS CUSTOMERS, OR USERS OF THE PRODUCTS OR PARTS.

Proper Storage of Motors:

When motors are not immediately installed, they should be stored in their normal upright position in a dry even temperature location, free of dust, gases and corrosive atmosphere. Inactive motors tend to expel grease from between the bearing surfaces, thereby removing the protective film that impedes metal-to-metal contact. At least once per month shafts should be rotated in accordance with WEG's installation and maintenance manual. Motors stored for a period exceeding one year should have the bearings re-lubricated in accordance with the WEG motor installation and maintenance manual.

Return Policy

WEG products that are purchased from our stocking warehouses must be returned within 90 days, freight to be paid by customer. Returned products must be unused, and in undamaged original packaging. If products are ordered incorrectly by the customer and need to be returned to stock, then a 20% re-stocking charge will be applied. If the returned products are deemed not to be in unused, undamaged condition, or in original packaging, then additional fees will be applied (up to and including full price of item). Returns on any modified products will not be allowed. Any products that are ordered as specials (with features that would not allow them to be stocked items) cannot be returned.

Contact WEG Service:

Toll -Free: **1-800-839-2529** E-Mail: **warranty@weg.net**

NEMA Market Certificates and Logos

Line	Certificate	Logo	File	Certificate	VFD use
W22	UL Listed Safe area	c UL us 3PT9 LISTED	E104590	Vol. 5 - Sec.10	Yes
	CSA Safe Area	C US Energy Verified	LR 38324	2194017	Yes
	CSA Div 2	C US Energy Verified	LR 50962	2156668	Yes
ODP/W40 to L6809	UL Listed Safe area	c UL us 3PT9 LISTED	E104590		Yes
	CSA Safe Area	C US Energy Verified	LR 38324	2593532	Yes
HGF//W22MV/W50	UL Listed Safe area	c UL us 3PT9 LISTED	E104590		
	CSA Div 2	C US Energy Verified	LR 50962	1959652	Yes
W22 Fire Pump	UL Listed Safe area	UL 68YN LISTED EX5990 FIRE PUMP MOTOR	EX5990	Vol. 1 - Sec.4	Yes
	CSA Safe Area	C US Energy Verified	LR 38324	2194017	Yes

continued on next page

NEMA Market Certificates and Logos - *continued*

Line	Certificate	Logo	File	Certificate	VFD use
Rolled Steel W01	CSA Safe Area		LR 38324	70014056	Yes
	CSA Div 2		LR 50962	70088957	Yes
	UL Listed Safe area		E104590	Vol. 5 - Sec.1	Yes
	UL Listed Safe area, thermally protected		E104590	Vol.1 - Sec.22	No
	UL Listed Safe area, with thermal protection certified by UL 1004-3		E125311	Vol. 1 - Sec.25	No
W21X	UL Listed Hazardous area		E87848		No
	CSA Hazardous Area		050962_C	1629892	Yes
56XP	UL Listed Hazardous area		E87848		No
Bluffton	CSA Safe Area		241536		No
All WEG	CSA Energy Verified		078282_0		NA

Part Number Configuration

Ordering

WEG model numbers contain up to 20 characters, distributed as follows:

XXX (HP)	XX (rpm)	XXX (Model)	X (Volts)	X X X X X (Application + Frame)	XXXX When Applicable

HP[1] - .12 - .16 - .25 - .33 - .50 - .75 - 001 - 0015 - 002 - 003 - 004 - 0045 - 005 - 007 - 010 - 015 - 020 - 025 - 030 - 040 - 050 - 075 - 100 - 125 - 150 - 200 - 250 - 300 - 400 - 450 - 500 - 600 - 650 ...

RPM - **36:** 3600rpm **18:** 1800rpm **12:** 1200rpm **09:** 900rpm
30: 3000rpm **15:** 1500rpm **10:** 1000rpm **07:** 750rpm

Model - Three Characters:

X ENCLOSURE	X EFFICIENCY	X PHASE
E - Totally Enclosed	S - Standard Efficiency	1 - 1 Phase
S - Severe Duty IEEE 841	P - High Efficiency	3 - 3 Phase
O - Open drip proof	T - NEMA Premium®	
X - eXplosion proof	G - Super Premium	
A - Totally Enclosed Air Over		
N - Totally Enclosed Non Ventilated		

Voltage	
B - 115 / 208 - 230V	M - 220 / 380 - 415V
C - 208 - 230V	N - 220 / 380V
D - 230V	O - 380 - 415V
E - 230 / 460V* # useable at 208V	P - 200V
F - 230 / 460V	Q - 460V
G - 460V PWS	R - 115 / 230V
H - 575V	V - 200 / 400V
I - 220V	W - 460 // 220 - 240 / 380 - 415V
J - 380V	X - Other Voltage
K - 190 / 380V	Y - 460 // 380 - 415 / 660 - 690V

** Suitable for PWS on 254T and larger on low voltage connection.*
 # For Rolled Steel Motors: 190-220/380-415V at 50Hz (derate may apply).

1) • For IEC Metric motors, the output will be given in kW: .12 - .18 - .25 - .37 - .55 - .75 - 001 - 0015 - 002 - 003 - 004 - 0045 - 005 - 007 - 009 - 011 - 015 - 018 - 022 - 030 - 037 - 045 - 055 - 075 - 090 - 110 - 130 - 150 - 185 - 200 - 220 - 250 - 300 - 315 ...

- 0015 (1.5HP) is the rating that will have four digits for output Identification and only one for RPM.
- 0045 (4.5kW) is the rating that will have four digits for output identification and only one for RPM.

Frame

The frame number must be included as long as the number of remaining characters allows.
Example: 143T, 143TC, 405T, 405TS, 184JP.

XXXX Suffix

–W22, –W2, –W or W = W22 platform
–W22S, –W2S or –WS = Single punched feet
–W22G, –W2G or –WG = AEGIS® Ring Inside
–S = Rolled Steel platform
–SG = Rolled Steel/AEGIS® Ring inside
–SRT = Rolled Steel/short frame
–W40 or W4 = W40 platform
–SRG = Rolled Steel/short frame/AEGIS® Ring inside

Application / Feature

For Definite Purpose lines, two pre-selected letters must be used after voltage code:

Auger Drive
ALuminum Frame
ATEX Motor
Brake Motor
Compressor Duty
Cooling Tower
Evaporative Cooler
Farm Duty
Footless for Fractionals (after frame)
Fire Pump
Hydraulic Pump
Irrigation Duty
IEEE 841 (Severe Duty IEEE 841)
Jet Pump
Crusher-Duty
Manual OverLoad Protection
Oil Well Pumping
Poultry Fan
Pad Mount
(Before the frame size): Round Body
Roller Bearings (Integrals)[2]
Resilient Base (Fractionals)
Rolled Steel Frame
Saw Arbor
Split Phase
Stainless Steel
Vector Duty (TEBC or TENV)

2) Roller bearings are recommended for all belt driven applications 100HP and above.

- Models in blue text are NEMA Premium® Efficiency
- Models in green text are NEMA Super Premium Efficiency

WEG MOTORS FOR VFD APPLICATIONS - CRITERIA

(Not applicable to motors rated for use in Division 1 hazardous areas. In such cases please contact WEG)

Valid for TEFC NEMA Premium® & IEC Tru-Metric - W22 Platforms and ODP

INSULATION SYSTEM AND BEARING CRITERIA

(If any of the conditions below are not met, VFD line filters must be used)

INSULATION SYSTEMS (for all NEMA frame sizes - from 143 to 589 and IEC frame sizes - from 90 to 355) - up to 690 V

Rated Voltage	Feature	Voltage Spikes motor terminals (maximum)	dV/dt inverter terminals (maximum)	Rise Time inverter terminals (minimum)	MTBP Minimum Time Between Pulse
$V_{rated} \leq 460$ V	Standard Insulation	≤2000 V	≤5200 V/µs	≥0,1 µs	≥6 µs
460 V < $V_{rated} \leq 575$ V	Reinforced Insulation	≤2000 V	≤6500 V/µs		

BEARING PROTECTION (for all rated voltage ranges)

NEMA Frame Size	Feature
Frame ≤449	· Optional: Insulated NDE endbell / insulated bearing
L449T – 589	Insulated NDE endbell standard L449 and above. Optional: insulated bearing (*)
	Shaft grounding recommended where insulated bearings are applied
IEC Frame Size	**Feature**
Frame ≤315	· Optional: Insulated NDE endbell / insulated bearing
315L – 355	Insulated NDE endbell standard 315L and above. Optional: insulated bearing (*)
	Shaft grounding recommended where insulated bearings are applied

(*) For insulated bearing, please contact WEG

TORQUE CRITERIA - Valid for 2, 4, 6 and 8 pole motors

NEMA PREMIUM® EFFICIENCY / IEC MOTORS - TEFC MOTORS

Frame Size	Constant Torque	Variable Torque
143 – 586/7 / 90 – 355 (1)	20:1 / 12:1	1000:1
586/7 / 355 (2)	6:1 / 2:1	1000:1 / 10:1

Satisfactory motor performance depends on proper drive setup - please contact WEG.
(1) For 250 HP / 185 kW or lower power motors. Also valid for 449 / 315 frames.
(2) For motors higher than 250 HP / 185 kW.

HIGH EFFICIENCY AND NEMA PREMIUM® EFFICIENCY - ODP MOTORS

Frame Size	Constant Torque	Variable Torque
182T – 364/5T	4:1	1000:1
404/5T – 5010T	2:1	1000:1

NOTES:

. Maximum recommended Inverter switching frequency of 5 kHz (minimum of 2.5 kHz)

. The speed ranges stated above are related to the motor thermal capacity only to 60HZ operated motors

. NEMA Premium® Efficiency WEG motors of all frame sizes can also be blower cooled under request. In such case, the motor will be suitable for variable and constant torque applications rated up to 1000:1

. NEMA Premium® Efficiency WEG motors comply with those maximum safe operating speeds established in NEMA MG1-2016, part 30 (consult table 30-1)

. Per IEC standard 60034-18-41:

- Exceed severe IVIC (**) level phase to ground - > 2392
- Exceed moderate IVIC (**) level phase to phase - > 2563

(**) Impulse Voltage Insulation Class

Single-Phase General Purpose Motors - (A-17)

TEFC – Foot Mount A-19
TEFC – C-Face – Foot Mount A-21
TEFC – C-Face – Footless A-22
TEFC – Foot Mount – Thermally Protected. A-22
ODP – Foot Mount. A-23
ODP – Resilient Base A-24
ODP – C-Face – Foot Mount A-25
ODP – C-Face – Footless A-26
ODP – Foot Mount – Thermally protected A-26

Single-Phase General Purpose Motors

TEFC Rolled Steel

ODP Rolled Steel

TEFC Cast Iron

Resillient Base

TEFC & ODP

High Starting Torque makes these motors ideal for a wide range of applications.

Standard Features:

- Ball bearings
- Class F insulation
- F1 Mounted
- V-ring Seals

Features that make a difference:

- High Starting Torque
- 182T frames and up are cast iron for severe duty
- NPT Threaded Holes in Terminal Box

ADDITIONAL TECHNICAL DATA

ELECTRICAL DATA:	TEFC -Cast Iron - B-5
	TEFC - RS - Standard Eff. - B-6
	ODP - RS - Standard Eff. - B-9
	ODP - RS - Premium Eff. - B-11
MECHANICAL DATA:	TEFC - Cast Iron - B-52
	TEFC - RS - Standard Eff. - B-56
	ODP - RS - Standard Eff. - B-60
	ODP - RS - Premium Eff. - B-64

Please refer to back cover for description of "NOTES"

For detailed specifications, data sheets, drawings and performance curves visit http://www.weg.net

Data subject to change without notice.

TEFC - Foot Mount

HP	kW	RPM	Frame	Catalog Number	List Price	Mult. Symbol	Approx. Shipping Weight (lbs)	Service Factor	FL Amps @ High	FL. Eff (%)	"C" Dimension (in)	Voltage (V)	Notes
0.25	0.18	3600	W56	**.2536ES1BW56-S**	**$257**	F1	20	1.15	2.10	50.0	10.713	115/208-230	9
		1800	W56	**.2518ES1BW56-S**	**$267**	F1	20	1.15	2.30	57.0	11.106	115/208-230	9
0.33	0.25	3600	W56	**.3336ES1BW56-S**	**$267**	F1	23	1.15	2.60	54.0	11.106	115/208-230	9
		1800	W56	**.3318ES1BW56-S**	**$283**	F1	22	1.15	3.00	61.0	11.500	115/208-230	9
		1800	W56	**.3318ES1RFDW56-S**	**$284**	R1	22	1.15	3.00	61.0	11.500	115/230	4;9
0.50	0.37	3600	W56	**.5036ES1BW56-S**	**$284**	F1	24	1.15	3.50	60.0	11.500	115/208-230	9
		3600	W56	**.5036ES1BOLW56-S**	**$316**	F1	24	1.15	3.50	60.0	11.500	115/208-230	4;9
		1800	W56	**.5018ES1RFDW56-S**	**$308**	R1	25	1.15	4.00	64.0	11.894	115/230	4;9
		1800	W56	**.5018ES1BW56-S**	**$312**	F1	24	1.15	4.00	64.0	11.894	115/208-230	9
		1200	W56	**.5012ES1B56-S**	**$512**	F1	38	1.15	3.20	71.0	13.508	115/208-230	9
0.75	0.55	3600	56	**.7536ES1BOL56-S**	**$329**	F1	31	1.15	4.00	66.0	12.721	115/208-230	4;9
		3600	56	**.7536ES1B56-S**	**$297**	F1	31	1.15	4.00	66.0	12.721	115/208-230	9
		1800	56	**.7518ES1RFD56-S**	**$357**	R1	34	1.15	5.30	68.5	13.114	115/230	4;9
		1800	56	**.7518ES1B56-S**	**$348**	F1	33	1.15	5.30	68.5	13.114	115/208-230	9
		1200	56H	**.7512ES1B56-S**	**$648**	F1	44	1.15	4.70	70.0	14.295	115/208-230	9
1	0.75	3600	56	**00136ES1BOL56-S**	**$408**	F1	35	1.15	5.10	70.0	13.114	115/208-230	4;9
		3600	56	**00136ES1B56-S**	**$376**	F1	34	1.15	5.10	70.0	13.114	115/208-230	9
		3600	143/5T	**00136ES1B143T-S**	**$553**	RS	35	1.15	5.10	70.0	13.212	115/208-230	9
		1800	56	**00118ES1RFD56-S**	**$394**	R1	40	1.15	6.80	71.0	13.901	115/230	4;9
		1800	56	**00118ES1B56-S**	**$401**	F1	39	1.15	6.80	71.9	13.902	115/208-230	9
		1800	143/5T	**00118ES1RFD143T-S**	**$400**	R1	40	1.15	6.80	71.0	13.901	115/230	4;9
		1800	143/5T	**00118ES1E143T-S**	**$531**	RS	42	1.15	3.40	71.0	13.970	208-230/460	9
1.5	1.1	3600	56	**00156ES1B56-S**	**$432**	F1	39	1.15	6.60	75.0	13.902	115/208-230	9
		3600	56	**00156ES1BOL56-S**	**$463**	F1	39	1.15	6.60	75.0	13.902	115/208-230	4;9
		3600	143/5T	**00156ES1B143T-S**	**$602**	RS	40	1.15	6.60	75.0	13.970	115/208-230	9
		1800	56H	**00158ES1RFD56H-S**	**$502**	R1	51	1.15	7.50	77.0	15.083	115/230	4;9
		1800	56H	**00158ES1B56-S**	**$456**	F1	40	1.15	7.50	77.0	15.083	115/208-230	9
		1800	143/5T	**00158ES1RFD145T-S**	**$504**	R1	50	1.15	7.48	77.0	15.083	115/230	4;9
		1800	143/5T	**00158ES1B145T-S**	**$612**	RS	48	1.15	7.50	77.0	15.152	115/208-230	9
		1800	143/5T	**00158ES1E145T-S**	**$611**	RS	48	1.15	3.70	77.0	15.152	208-230/460	9
		1200	182T	**00152ES1E182T**	**$1,100**	W1	97	1.15	4.90	75.0	16.050	208-230/460	39

continued on next page

Please refer to back cover for description of "NOTES"

For detailed specifications, data sheets, drawings and performance curves visit http://www.weg.net

Data subject to change without notice.

Single-Phase General Purpose Motors

TEFC - Foot Mount - *continued*

HP	kW	RPM	Frame	Catalog Number	List Price	Mult. Symbol	Approx. Shipping Weight (lbs)	Service Factor	FL Amps @ High	FL. Eff (%)	"C" Dimension (in)	Voltage (V)	Notes
2	1.5	3600	56H	**00236ES1BOL56-S**	**$592**	F1	44	1.15	8.70	77.0	14.295	115/208-230	4;9
		3600	56H	**00236ES1B56-S**	**$561**	F1	44	1.15	8.70	77.0	14.295	115/208-230	9
		3600	143/5T	**00236ES1E145T-S**	**$640**	RS	43	1.15	4.40	77.0	14.365	208-230/460	9
		3600	143/5T	**00236ES1B145T-S**	**$641**	RS	43	1.15	8.70	77.0	14.365	115/208-230	9
		1800	56H	**00218ES1RFD56H-S**	**$529**	R1	56	1.15	10.0	78.5	15.870	115/230	4;9
		1800	143/5T	**00218ES1RFD145T-S**	**$578**	R1	57	1.15	10.0	78.5	15.870	115/230	4;9
		1800	143/5T	**00218ES1E145T-S**	**$615**	RS	56	1.15	5.00	78.5	15.938	208-230/460	9
		1800	143/5T	**00218ES1B145T-S**	**$615**	RS	56	1.15	10.0	78.5	15.938	115/208-230	9
		1800	W182/4T	**00218ES1RFD182T**	**$790**	R1	89	1.15	10.0	81.0	17.244	115/230	4,39
		1200	W213/5T	**00212ES1E213T**	**$1,209**	W1	125	1.15	5.30	78.0	20.984	208-230/460	39
3	2.2	3600	143/5T	**00336ES1E145T-S**	**$829**	RS	53	1.15	6.40	80.0	15.545	208-230/460	9
		3600	143/5T	**00336ES1B145T-S**	**$830**	RS	53	1.15	12.7	80.0	15.545	115/208-230	9
		3600	W182T	**00336ES1B182T**	**$882**	W1	92	1.15	13.6	80.0	17.240	115/208-230	39
		3600	182T	**00336ES1E182T**	**$879**	W1	96	1.15	6.80	80.0	16.050	208-230/460	39
		1800	184T	**00318ES1E184T**	**$874**	W1	99	1.15	6.80	77.0	17.050	208-230/460	39
		1800	184T	**00318ES1C184T**	**$875**	W1	99	1.15	13.6	77.0	17.050	208-230	39
		1800	W182/4T	**00318ES1DFD184T**	**$915**	R1	93	1.15	14.5	81.0	17.244	230	4,39
		1200	215T	**00312ES1E215T**	**$1,327**	W1	170	1.15	6.70	80.0	20.984	208-230/460	39
5	3.7	3600	184T	**00536ES1E184T**	**$1,038**	W1	110	1.15	10.5	83.0	17.050	208-230/460	39
		3600	184T	**00536ES1B184T**	**$1,040**	W1	110	1.15	21.0	83.0	17.050	115/208-230	39
		1800	184T	**00518ES1E184T**	**$1,064**	W1	118	1.15	10.7	79.0	17.050	208-230/460	39
		1800	184T	**00518ES1C184T**	**$1,066**	W1	118	1.15	21.4	79.0	17.050	208-230	39
		1800	184T	**00518ES1DFD184T**	**$1,074**	R1	119	1.15	21.4	79.0	17.050	230	4,39
		1800	W213/5TZ	**00518ES1DFD215Z**	**$1,205**	R1	136	1.15	21.4	79.0	20.984	230	4,39
		1800	W213/5T	**00518ES1DFD215T**	**$1,205**	R1	136	1.15	21.4	79.0	20.984	230	4,39
		1200	215T	**00512ES1E215T**	**$1,588**	W1	172	1.15	11.0	80.0	19.567	208-230/460	39
7.5	5.5	3600	213T	**00736ES1E213T**	**$1,548**	W1	147	1.15	14.9	86.0	18.021	208-230/460	39
		3600	213T	**00736ES1B213T**	**$1,552**	W1	147	1.15	29.8	86.0	18.021	115/208-230	39
		1800	215T	**00718ES1E215T**	**$1,359**	W1	164	1.15	17.0	83.0	19.567	208-230/460	39
		1800	215T	**00718ES1DFD215T**	**$1,463**	R1	168	1.15	33.0	83.0	19.567	230	4,39
		1800	215TZ	**00718ES1DFD215Z**	**$1,463**	R1	168	1.15	33.0	83.0	19.567	230	4,39
10	7.5	3600	215T	**01036ES1E215T**	**$1,916**	W1	162	1.15	19.4	86.0	19.567	208-230/460	39
		1800	215T	**01018ES1E215T**	**$1,579**	W1	188	1.15	19.5	84.0	19.567	208-230/460	39
		1800	215T	**01018ES1DFD215T**	**$1,692**	R1	193	1.15	40.0	83.0	19.567	230	4,39
12.5	9.2	3600	215T	**01236ES1C215T**	**$2,015**	W1	182	1.15	53.6	88.5	19.567	208-230	39
		1800	215T	**01218ES1E215T**	**$1,776**	W1	201	1.15	24.0	84.0	19.567	208-230/460	39

Please refer to back cover for description of "NOTES"

For detailed specifications, data sheets, drawings and performance curves visit http://www.weg.net

Data subject to change without notice.

Single-Phase General Purpose Motors

TEFC - C-Face - Foot Mount

HP	kW	RPM	Frame	Catalog Number	List Price	Mult. Symbol	Approx. Shipping Weight (lbs)	Service Factor	FL Amps @ High	FL. Eff (%)	"C" Dimension (in)	Voltage (V)	Notes
0.25	0.18	3600	W56C	**.2536ES1BW56C-S**	**$280**	F1	20	1.15	2.10	50.0	10.713	115/208-230	9
		1800	W56C	**.2518ES1BW56C-S**	**$288**	F1	20	1.15	2.30	57.0	11.106	115/208-230	9
0.33	0.25	3600	W56C	**.3336ES1BW56C-S**	**$288**	F1	22	1.15	2.60	54.0	11.106	115/208-230	9
		1800	W56C	**.3318ES1BW56C-S**	**$304**	F1	22	1.15	3.00	61.0	11.500	115/208-230	9
0.50	0.37	3600	W56C	**.5036ES1BW56C-S**	**$313**	F1	24	1.15	3.50	60.0	11.500	115/208-230	9
		1800	W56C	**.5018ES1BW56C-S**	**$333**	F1	26	1.15	4.00	64.0	11.894	115/208-230	9
		1800	W56C	**.5018ES1BOW56C-S**	**$348**	F1	24	1.15	4.00	64.0	11.894	115/208-230	3;9
		1200	W56C	**.5012ES1B56C-S**	**$535**	F1	39	1.15	3.20	67.0	13.508	115/208-230	9
0.75	0.55	3600	56C	**.7536ES1B56C-S**	**$353**	F1	32	1.15	4.00	66.0	12.721	115/208-230	9
		1800	56C	**.7518ES1B56C-S**	**$370**	F1	34	1.15	5.30	68.5	13.114	115/208-230	9
		1200	56HC	**.7512ES1B56C-S**	**$669**	F1	45	1.15	4.70	70.0	14.295	115/208-230	9
1	0.75	3600	56C	**00136ES1B56C-S**	**$378**	F1	35	1.15	5.10	70.0	13.114	115/208-230	9
		1800	56C	**00118ES1B56C-S**	**$424**	F1	40	1.15	6.80	71.0	13.902	115/208-230	9
		1800	56C	**00118ES1BO56C-S**	**$439**	F1	40	1.15	6.80	71.0	13.902	115/208-230	3;9
1.5	1.1	3600	56C	**00156ES1B56C-S**	**$454**	F1	40	1.15	6.60	75.0	13.902	115/208-230	9
		1800	56HC	**00158ES1BO56C-S**	**$493**	F1	41	1.15	7.50	77.0	15.083	115/208-230	3;9
		1800	56HC	**00158ES1B56C-S**	**$478**	F1	41	1.15	7.50	77.0	15.083	115/208-230	9
2	1.5	3600	56HC	**00236ES1B56C-S**	**$589**	F1	44	1.15	8.70	77.0	14.295	115/208-230	9
		1800	143/5TC	**00218ES1B145TC-S**	**$643**	RS	52	1.15	10.0	78.5	15.938	115/208-230	9
3	2.2	3600	143/5TC	**00336ES1E145TC-S**	**$858**	RS	56	1.15	6.40	80.0	15.545	208-230/460	9
		1800	184TC	**00318ES1E184TC**	**$913**	W1	99	1.15	6.80	77.0	17.050	208-230/460	39
		1800	184TC	**00318ES1B184TC**	**$913**	W1	99	1.15	13.6	77.0	17.050	115/208-230	39
		1800	184TC	**00318ES1C184TC**	**$913**	W1	99	1.15	13.6	77.0	17.050	208-230	39
5	3.7	3600	184TC	**00536ES1E184TC**	**$1,077**	W1	109	1.15	10.5	83.0	17.050	208-230/460	39
		1800	184TC	**00518ES1E184TC**	**$1,103**	W1	118	1.15	10.7	79.0	17.050	208-230/460	39
		1800	184TC	**00518ES1C184TC**	**$1,103**	W1	118	1.15	21.4	79.0	17.050	208-230	39
7.5	5.5	3600	213TC	**00736ES1E213TC**	**$1,598**	W1	147	1.15	14.9	86.0	18.021	208-230/460	39
		1800	215TC	**00718ES1E215TC**	**$1,410**	W1	166	1.15	17.0	83.0	19.567	208-230/460	39
10	7.5	3600	215TC	**01036ES1E215TC**	**$1,970**	W1	164	1.15	19.4	86.0	19.567	208-230/460	39
		1800	215TC	**01018ES1E215TC**	**$1,633**	W1	190	1.15	19.5	84.0	19.567	208-230/460	39
12.5	9.2	1800	215TC	**01218ES1E215TC**	**$1,827**	W1	202	1.15	24.0	84.0	19.567	208-230/460	39

Please refer to back cover for description of "NOTES"

For detailed specifications, data sheets, drawings and performance curves visit http://www.weg.net

Data subject to change without notice.

Single-Phase General Purpose Motors

TEFC - C-Face - Footless

HP	kW	RPM	Frame	Catalog Number	List Price	Mult. Symbol	Approx. Shipping Weight (lbs)	Service Factor	FL Amps @ High	FL. Eff (%)	"C" Dimension (in)	Voltage (V)	Notes
0.33	0.25	3600	W56C	**.3336ES1BW56CFL-S**	**$288**	F1	21	1.15	2.60	53.0	11.106	115/208-230	9;20
		1800	W56C	**.3318ES1BW56CFL-S**	**$304**	F1	22	1.15	3.00	61.0	11.500	115/208-230	9;20
0.50	0.37	3600	W56C	**.5036ES1BW56CFL-S**	**$313**	F1	24	1.15	3.50	60.0	11.500	115/208-230	9;20
		1800	W56C	**.5018ES1BW56CFL-S**	**$333**	F1	24	1.15	4.00	64.0	11.894	115/208-230	9;20
		1200	56C	**.5012ES1B56CFL-S**	**$535**	F1	38	1.15	3.20	71.0	13.508	115/208-230	9;20
0.75	0.55	3600	56C	**.7536ES1B56CFL-S**	**$353**	F1	31	1.15	4.00	66.0	12.721	115/208-230	9;20
		1800	56C	**.7518ES1B56CFL-S**	**$370**	F1	34	1.15	5.30	68.5	13.114	115/208-230	9;20
		1200	56C	**.7512ES1B56CFL-S**	**$669**	F1	44	1.15	4.70	70.0	14.295	115/208-230	9;20
1	0.75	3600	56C	**00136ES1B56CFL-S**	**$378**	F1	35	1.15	5.10	70.0	13.114	115/208-230	9;20
		1800	56C	**00118ES1B56CFL-S**	**$424**	F1	39	1.15	6.80	71.0	13.902	115/208-230	9;20
		1800	143/5TC	**00118ES1ER143TC-S**	**$559**	RS	43	1.15	3.40	71.0	13.970	208-230/460	9;15
1.5	1.1	3600	56C	**00156ES1B56CFL-S**	**$454**	F1	39	1.15	6.60	75.0	13.902	115/208-230	9;20
		1800	56C	**00158ES1B56CFL-S**	**$478**	F1	40	1.15	7.50	77.0	15.083	115/208-230	9;20
2	1.5	3600	56C	**00236ES1B56CFL-S**	**$589**	F1	43	1.15	8.70	77.0	14.295	115/208-230	9;20
3	2.2	1800	184TC	**00318ES1ER184TC**	**$912**	W1	98	1.15	6.80	77.0	17.050	208-230/460	15,39

TEFC - Foot Mount - Thermally Protected

HP	kW	RPM	Frame	Catalog Number	List Price	Mult. Symbol	Approx. Shipping Weight (lbs)	Service Factor	FL Amps @ High	FL. Eff (%)	"C" Dimension (in)	Voltage (V)	Notes
0.33	0.25	1800	W56	**.3318ES1RFDW56-S**	**$284**	R1	22	1.15	3.00	61.0	11.500	115/230	4;9
0.50	0.37	3600	W56	**.5036ES1BOLW56-S**	**$316**	F1	24	1.15	3.50	60.0	11.500	115/208-230	4;9
		1800	W56	**.5018ES1RFDW56-S**	**$308**	R1	25	1.15	4.00	64.0	11.894	115/230	4;9
0.75	0.55	3600	56	**.7536ES1BOL56-S**	**$329**	F1	31	1.15	4.00	66.0	12.721	115/208-230	4;9
		1800	56	**.7518ES1RFD56-S**	**$357**	R1	34	1.15	5.30	68.5	13.114	115/230	4;9
1	0.75	3600	56	**00136ES1BOL56-S**	**$408**	F1	35	1.15	5.10	70.0	13.114	115/208-230	4;9
		1800	56	**00118ES1RFD56-S**	**$394**	R1	40	1.15	6.80	71.0	13.901	115/230	4;9
		1800	143/5T	**00118ES1RFD143T-S**	**$400**	R1	40	1.15	6.80	71.0	13.901	115/230	4;9
1.5	1.1	3600	56	**00156ES1BOL56-S**	**$463**	F1	39	1.15	6.60	75.0	13.902	115/208-230	4;9
		1800	56H	**00158ES1RFD56H-S**	**$502**	R1	51	1.15	7.50	77.0	15.083	115/230	4;9
		1800	143/5T	**00158ES1RFD145T-S**	**$504**	R1	50	1.15	7.48	77.0	15.083	115/230	4;9
2	1.5	3600	56H	**00236ES1BOL56-S**	**$592**	F1	44	1.15	8.70	77.0	14.295	115/208-230	4;9
		1800	56H	**00218ES1RFD56H-S**	**$529**	R1	56	1.15	10.0	78.5	15.870	115/230	4;9
		1800	143/5T	**00218ES1RFD145T-S**	**$578**	R1	57	1.15	10.0	78.5	15.870	115/230	4;9
		1800	W182/4T	**00218ES1RFD182T**	**$790**	R1	89	1.15	10.0	81.0	17.244	115/230	4,39
3	2.2	1800	W182/4T	**00318ES1DFD184T**	**$915**	R1	93	1.15	14.5	81.0	17.244	230	4,39
5	3.7	1800	184T	**00518ES1DFD184T**	**$1,074**	R1	119	1.15	21.4	79.0	17.050	230	4,39
		1800	W213/5T	**00518ES1DFD215T**	**$1,205**	R1	136	1.15	21.4	79.0	20.984	230	4,39
		1800	W213/5TZ	**00518ES1DFD215Z**	**$1,205**	R1	136	1.15	21.4	79.0	20.984	230	4,39
7.5	5.5	1800	215T	**00718ES1DFD215T**	**$1,463**	R1	168	1.15	33.0	83.0	19.567	230	4,39
		1800	215TZ	**00718ES1DFD215Z**	**$1,463**	R1	168	1.15	33.0	83.0	19.567	230	4,39
10	7.5	1800	215T	**01018ES1DFD215T**	**$1,692**	R1	193	1.15	40.0	83.0	19.567	230	4,39

Please refer to back cover for description of "NOTES"

For detailed specifications, data sheets, drawings and performance curves visit http://www.weg.net

Data subject to change without notice.

ODP - Foot Mount

HP	kW	RPM	Frame	Catalog Number	List Price	Mult. Symbol	Approx. Shipping Weight (lbs)	Service Factor	FL Amps @ High	FL. Eff (%)	"C" Dimension (in)	Voltage (V)	Notes
0.12	0.09	1800	48	.12180S1B48-S	$201	F1B	18	1.40	1.40	50.0	9.098	115/208-230	9
0.16	0.12	3600	48	.16360S1B48-S	$216	F1B	21	1.35	1.40	53.0	9.098	115/208-230	9
		1800	48	.16180S1B48-S	$208	F1B	22	1.35	1.70	53.0	9.098	115/208-230	9
0.25	0.18	3600	48	.25360T1B48-S	$253	F2B	19	1.35	1.30	66.6	9.492	115/208-230	9
		3600	W56	.25360T1BW56-S	$253	F2B	19	1.35	1.30	66.6	9.866	115/208-230	9
		1800	48	.25180T1B48-S	$241	F2B	18	1.35	1.60	68.5	9.492	115/208-230	9
		1800	W56	.25180T1BW56-S	$241	F2B	19	1.35	1.60	68.5	9.866	115/208-230	9
0.33	0.25	3600	48	.33360T1B48-S	$256	F2B	23	1.35	1.60	70.5	9.886	115/208-230	9
		1800	48	.33180T1B48-S	$275	F2B	20	1.35	2.10	72.4	9.886	115/208-230	9
		1800	W56	.33180T1BW56-S	$275	F2B	21	1.35	2.10	72.4	10.260	115/208-230	9
0.50	0.37	3600	48	.50360T1B48-S	$276	F2B	23	1.25	2.40	72.4	9.886	115/208-230	9
		3600	W56	.50360S1BCDW56-S	$224	C1S	28	1.00	3.10	63.0	9.866	115/208-230	1;4;6;9
		3600	W56	.50360T1BW56-S	$282	F2B	24	1.25	2.40	72.4	10.260	115/208-230	9
		1800	48	.50180T1B48-S	$318	F2B	23	1.25	2.80	76.2	10.280	115/208-230	9
		1800	W56	.50180T1BW56-S	$307	F2B	23	1.25	2.80	76.2	10.654	115/208-230	9
0.75	0.55	3600	W56	.75360S1BCDW56-S	$237	C1S	22	1.00	4.30	68.5	10.260	115/208-230	1;4;6;9
		3600	56	.75360T1B56-S	$320	F2B	30	1.25	3.40	76.2	11.890	115/208-230	9
		1800	56	.75180T1B56-S	$387	F2B	38	1.25	3.40	81.8	11.890	115/208-230	9
1	0.75	3600	56	001360S1BCD56-S	$278	C1S	36	1.00	6.60	67.0	11.102	115/208-230	1;4;6;9
		3600	56	001360T1B56-S	$347	F2B	35	1.25	4.30	80.4	11.890	115/208-230	9
		1800	56	001180T1B56-S	$421	F2B	41	1.15	4.50	82.6	12.677	115/208-230	9
		1800	56	001180T1B056-S	$438	F2B	41	1.15	4.50	82.6	12.677	115/208-230	3;9
1.5	1.1	3600	56	001560S1BCD56-S	$311	C1S	40	1.00	8.70	68.0	11.496	115/208-230	1;4;6;9
		3600	56	001560T1B56-S	$393	F2B	38	1.15	6.20	81.5	12.284	115/208-230	9
		1800	56H	001580T1B56-S	$523	F2B	49	1.15	6.80	83.8	13.071	115/208-230	9
		1800	56H	001580T1B056-S	$541	F2B	50	1.15	6.80	83.8	13.465	115/208-230	3;9
2	1.5	3600	56H	002360S1BCD56-S	$372	C1S	34	1.00	8.90	70.0	11.890	115/208-230	1;4;6;9
		3600	56H	002360T1B56-S	$485	F2B	43	1.15	8.40	82.9	12.677	115/208-230	9
		1800	56H	002180T1B56-S	$626	F2B	54	1.15	9.30	84.5	13.465	115/208-230	9
3	2.2	3600	56H	003360S1CCD56-S	$432	C1S	41	1.00	12.7	80.0	12.677	208-230	1;4;6;9
		3600	56H	003360T1B56-S	$568	F2B	52	1.15	12.2	84.1	13.465	115/208-230	9
		3600	182T	003360S1B182T	$607	W1B	91	1.25	15.0	81.5	14.448	115/208-230	39
		3600	182T	003360S1C182T	$606	W1B	91	1.25	15.0	81.5	14.448	208-230	39
		1800	184T	003180S1B184T	$690	W1B	105	1.25	17.5	75.0	14.870	115/208-230	39
		1800	184T	003180S1C184T	$690	W1B	105	1.25	17.5	75.0	14.870	208-230	39
		1800	184T	003180S1CCD0L184T	$687	C1	99	1.15	17.5	75.0	14.875	208-230	4;6,39

continued on next page

Please refer to back cover for description of "NOTES"

For detailed specifications, data sheets, drawings and performance curves visit http://www.weg.net

Data subject to change without notice.

Single-Phase General Purpose Motors

ODP - Foot Mount - *continued*

HP	kW	RPM	Frame	Catalog Number	List Price	Mult. Symbol	Approx. Shipping Weight (lbs)	Service Factor	FL Amps @ High	FL. Eff (%)	"C" Dimension (in)	Voltage (V)	Notes
5	3.7	3600	56H	00536OS1DCD56H-S	$458	C1S	53	1.00	20.3	80.0	13.465	230	1;4;6;9
		3600	56HZ	00536OS1DCD56HZ-S	$481	C1S	53	1.00	20.3	80.0	13.533	230	1;4;5;6;9
		3600	W182/4Y	00536OS1CCDW184Y-S	$526	C1S	56	1.00	20.7	80.0	15.152	208-230	1;4;5;6;9
		3600	184T	00536OS1B184T	$863	W1B	110	1.25	21.0	81.5	14.870	115/208-230	39
		3600	184T	00536OS1C184T	$863	W1B	110	1.25	21.0	81.5	14.870	208-230	39
		3600	184T	00536OS1D184T	$862	W1B	110	1.25	21.0	81.5	14.870	230	39
		1800	184T	00518OS1C184T	$725	W1B	107	1.25	22.0	82.5	14.870	208-230	39
		1800	184T	00518OS1CCDOL184T	$721	C1	101	1.15	21.5	82.5	14.875	208-230	4;6;39
		1800	184T	00518OS1CCD184T	$682	C1	102	1.25	21.5	82.5	14.875	208-230	6;10;39
7.5	5.5	3600	184T	00736OS1C184T	$961	W1B	120	1.25	30.0	85.0	14.870	208-230	39
		1800	213/5T	00718OS1F215T	$961	W1B	130	1.15	15.3	85.0	19.660	230/460	5;9;28
		1800	215T	00718OS1CCD215T	$961	C1	129	1.15	31.3	84.5	19.660	208-230	5;6;9;28
10	7.5	1800	215T	01018OS1CCD215T	$1,468	C1	162	1.15	43.0	85.0	21.235	208-230	5;6;9;28

ODP - Resilient Base

HP	kW	RPM	Frame	Catalog Number	List Price	Mult. Symbol	Approx. Shipping Weight (lbs)	Service Factor	FL Amps @ High	FL. Eff (%)	"C" Dimension (in)	Voltage (V)	Notes
0.16	0.12	1800	48Z	.16180S1ASPRBO48Z-S	$272	F1B	21	1.35	3.00	50.5	10.138	115	3;9;13;16
		1800	48Z	.16180S1ASPRB48Z-S	$260	F1B	21	1.35	3.00	50.5	10.138	115	3;9;13;16
0.25	0.18	1800	48Z	.25180S1BSPRBO48Z-S	$274	F1B	22	1.35	2.10	55.0	10.138	115/208-230	3;9;13;16
		1800	48Z	.25180S1ASPRBO48Z-S	$274	F1B	22	1.35	4.30	55.0	10.138	115	3;9;13;16
		1800	48Z	.25180S1ASPRB48Z-S	$262	F1B	22	1.35	4.30	55.0	10.138	115	3;9;13;16
0.33	0.25	1800	48Z	.33180S1BSPRBO48Z-S	$284	F1B	24	1.35	2.60	60.8	10.138	115/208-230	3;9;13;16
		1800	48Z	.33180S1BSPRB48Z-S	$272	F1B	24	1.35	2.60	60.8	10.138	115/208-230	3;9;13;16
		1800	W56	.33180S1BSPRBOW56-S	$288	F1B	25	1.35	2.60	62.0	10.138	115/208-230	3;9;13;16
		1800	W56	.33180S1BSPRBW56-S	$276	F1B	25	1.35	2.60	62.0	10.138	115/208-230	3;9;13;16
		1800	W56	.33180T1BRBOW56-S	$325	F2B	24	1.35	2.10	72.4	10.925	115/208-230	3;9;13
0.50	0.37	1800	48Z	.50180S1BSPRBO48Z-S	$311	F1B	29	1.25	3.70	63.5	10.925	115/208-230	3;9;13;16
		1800	48Z	.50180S1BSPRB48Z-S	$299	F1B	29	1.25	3.70	63.5	10.925	115/208-230	3;9;13;16
		1800	W56	.50180S1BSPRBOW56-S	$316	F1B	30	1.25	3.70	63.5	10.945	115/208-230	3;9;13;16
		1800	W56	.50180S1BSPRBW56-S	$304	F1B	30	1.25	3.70	63.5	10.945	115/208-230	3;9;13;16
		1800	W56	.50180T1BRBOW56-S	$368	F2B	26	1.25	2.75	76.2	11.319	115/208-230	3;9;13
0.75	0.55	1800	56	.75180T1BRBO56-S	$434	F2B	38	1.25	3.40	81.8	12.402	115/208-230	3;9;13
1	0.75	1800	56	00118OT1BRBO56-S	$468	F2B	43	1.15	4.50	82.6	13.189	115/208-230	3;9;13
1.5	1.1	3600	56	00156OT1BRBO56-S	$450	F2B	39	1.15	6.20	81.5	12.795	115/208-230	3;9;13
		1800	56H	00158OT1BRBO56-S	$570	F2B	50	1.15	6.80	83.8	13.583	115/208-230	3;9;13
2	1.5	1800	56H	00218OT1BRBO56H-S	$616	F2B	57	1.15	9.30	84.5	14.373	115/208-230	3;9;13

Please refer to back cover for description of "NOTES"

For detailed specifications, data sheets, drawings and performance curves visit http://www.weg.net

Data subject to change without notice.

Single-Phase General Purpose Motors

ODP - C-Face - Foot Mount

HP	kW	RPM	Frame	Catalog Number	List Price	Mult. Sym-bol	Approx. Shipping Weight (lbs)	Service Factor	FL Amps @ High	FL. Eff (%)	"C" Dimension (in)	Voltage (V)	Notes
0.12	0.09	1800	48CH	.12180S1B48CH-S	$222	F1B	18	1.40	1.40	50.0	9.098	115/208-230	9
0.16	0.12	3600	48CH	.16360S1B48CH-S	$237	F1B	21	1.35	1.40	53.0	9.098	115/208-230	9
		1800	48CH	.16180S1B48CH-S	$231	F1B	22	1.35	1.70	53.0	9.098	115/208-230	9
0.25	0.18	3600	48CH	.25360T1B48CH-S	$277	F2B	19	1.35	1.30	66.6	9.492	115/208-230	9
		3600	W56C	.25360T1BW56C-S	$281	F2B	19	1.35	1.30	66.6	9.866	115/208-230	9
		1800	48CH	.25180T1B48CH-S	$269	F2B	18	1.35	1.60	68.5	9.492	115/208-230	9
		1800	W56C	.25180T1BW56C-S	$269	F2B	19	1.35	1.60	68.5	9.866	115/208-230	9
0.33	0.25	3600	48CH	.33360T1B48CH-S	$282	F2B	23	1.35	1.60	70.5	9.886	115/208-230	9
		3600	W56C	.33360T1BW56C-S	$285	F2B	23	1.35	1.60	70.5	10.260	115/208-230	9
		1800	48CH	.33180T1B48CH-S	$299	F2B	20	1.35	2.10	72.4	9.886	115/208-230	9
		1800	W56C	.33180T1BW56C-S	$303	F2B	21	1.35	2.10	72.4	10.260	115/208-230	9
0.50	0.37	3600	48CH	.50360T1B48CH-S	$300	F2B	23	1.25	2.40	72.4	9.886	115/208-230	9
		3600	W56C	.50360T1BW56C-S	$310	F2B	24	1.25	2.40	72.4	10.260	115/208-230	9
		1800	W56C	.50180T1BOW56C-S	$352	F2B	24	1.25	2.80	76.2	10.654	115/208-230	3;9
		1800	W56C	.50180T1BW56C-S	$335	F2B	24	1.25	2.80	76.2	10.654	115/208-230	9
0.75	0.55	3600	56C	.75360T1B56C-S	$348	F2B	30	1.25	3.40	76.2	11.890	115/208-230	9
		1800	56C	.75180T1B56C-S	$415	F2B	38	1.25	3.40	81.8	11.890	115/208-230	9
1	0.75	3600	56C	001360T1B56C-S	$375	F2B	35	1.25	4.30	80.4	11.890	115/208-230	9
		1800	56C	001180T1B56C-S	$449	F2B	41	1.15	4.50	82.6	12.677	115/208-230	9
1.5	1.1	3600	56C	001560T1B56C-S	$421	F2B	38	1.15	6.20	81.5	12.284	115/208-230	9
		1800	56HC	001580T1B56C-S	$551	F2B	49	1.15	6.80	83.8	13.071	115/208-230	9
2	1.5	3600	56HC	002360T1B56C-S	$513	F2B	43	1.15	8.40	82.9	12.677	115/208-230	9
		1800	56HC	002180T1B56C-S	$654	F2B	54	1.15	9.30	84.5	13.465	115/208-230	9
3	2.2	3600	56HC	003360T1B56C-S	$596	F2B	52	1.15	12.2	84.1	13.465	115/208-230	9

Please refer to back cover for description of "NOTES"

For detailed specifications, data sheets, drawings and performance curves visit http://www.weg.net

Data subject to change without notice.

Single-Phase General Purpose Motors

ODP - C-Face - Footless

HP	kW	RPM	Frame	Catalog Number	List Price	Mult. Symbol	Approx. Shipping Weight (lbs)	Service Factor	FL Amps @ High	FL. Eff (%)	"C" Dimension (in)	Voltage (V)	Notes
0.33	0.25	3600	W56C	.33360T1BW56CFL-S	$285	F2B	23	1.35	1.60	70.5	10.260	115/208-230	9;20
		3600	W56C	.33360T1BOW56CFL-S	$302	F2B	23	1.35	1.60	70.5	10.260	115/208-230	3;9;20
		1800	W56C	.33180T1BW56CFL-S	$303	F2B	20	1.35	2.10	72.4	10.260	115/208-230	9;20
0.50	0.37	3600	W56C	.50360T1BOW56CFL-S	$327	F2B	23	1.25	2.40	72.4	10.260	115/208-230	3;9;20
		3600	W56C	.50360T1BW56CFL-S	$310	F2B	23	1.25	2.40	72.4	10.260	115/208-230	9;20
		1800	W56C	.50180T1BW56CFL-S	$335	F2B	23	1.25	2.80	76.2	10.654	115/208-230	9;20
0.75	0.55	3600	56C	.75360T1BO56CFL-S	$365	F2B	29	1.25	3.40	76.2	11.890	115/208-230	3;9;20
		3600	56C	.75360T1B56CFL-S	$348	F2B	29	1.25	3.40	76.2	11.890	115/208-230	9;20
		1800	56C	.75180T1B56CFL-S	$415	F2B	38	1.25	3.40	81.8	11.890	115/208-230	9;20
1	0.75	3600	56C	001360T1B56CFL-S	$375	F2B	35	1.25	4.30	80.4	11.890	115/208-230	9;20
		3600	56C	001360T1BO56CFL-S	$392	F2B	35	1.25	4.30	80.4	11.890	115/208-230	3;9;20
		1800	56C	001180T1B56CFL-S	$449	F2B	41	1.15	4.50	82.6	12.677	115/208-230	9;20
1.5	1.1	3600	56C	001560T1B56CFL-S	$421	F2B	38	1.15	6.20	81.5	12.284	115/208-230	9;20
		3600	56C	001560T1BO56CFL-S	$438	F2B	38	1.15	6.20	81.5	12.284	115/208-230	3;9;20
		1800	56C	001580T1B56CFL-S	$551	F2B	48	1.15	6.80	83.8	13.071	115/208-230	9;20
2	1.5	3600	56C	002360T1B56CFL-S	$513	F2B	43	1.15	8.40	82.9	12.677	115/208-230	9;20
		3600	56C	002360T1BO56CFL-S	$530	F2B	43	1.15	8.40	82.9	12.677	115/208-230	3;9;20
		1800	56C	002180T1B56CFL-S	$654	F2B	54	1.15	9.30	84.5	13.465	115/208-230	9;20
3	2.2	3600	56C	003360T1BO56CFL-S	$613	F2B	51	1.15	12.2	84.1	13.465	115/208-230	3;9;20
		3600	56C	003360T1B56CFL-S	$596	F2B	51	1.15	12.2	84.1	13.465	115/208-230	9;20

ODP - Foot Mount - Thermally Protected

HP	kW	RPM	Frame	Catalog Number	List Price	Mult. Symbol	Approx. Shipping Weight (lbs)	Service Factor	FL Amps @ High	FL. Eff (%)	"C" Dimension (in)	Voltage (V)	Notes
0.50	0.37	3600	W56	.50360S1BCDW56-S	$224	C1S	28	1.00	3.10	63.0	9.866	115/208-230	1;4;6;9
0.75	0.55	3600	W56	.75360S1BCDW56-S	$237	C1S	22	1.00	4.30	68.5	10.260	115/208-230	1;4;6;9
1	0.75	3600	56	001360S1BCD56-S	$278	C1S	36	1.00	6.60	67.0	11.102	115/208-230	1;4;6;9
		1800	56	001180T1BO56-S	$438	F2B	41	1.15	4.50	82.6	12.677	115/208-230	3;9
1.5	1.1	3600	56	001560S1BCD56-S	$311	C1S	40	1.00	8.70	68.0	11.496	115/208-230	1;4;6;9
		1800	56H	001580T1BO56-S	$541	F2B	50	1.15	6.80	83.8	13.465	115/208-230	3;9
2	1.5	3600	56H	002360S1BCD56-S	$372	C1S	34	1.00	8.90	70.0	11.890	115/208-230	1;4;6;9
3	2.2	3600	56H	003360S1CCD56-S	$432	C1S	41	1.00	12.7	80.0	12.677	208-230	1;4;6;9
5	3.7	3600	56H	005360S1DCD56H-S	$458	C1S	53	1.00	20.3	80.0	13.465	230	1;4;6;9
		3600	56HZ	005360S1DCD56HZ-S	$481	C1S	53	1.00	20.3	80.0	13.533	230	1;4;5;6;9
		3600	W182/4Y	005360S1CCDW184Y-S	$526	C1S	56	1.00	20.7	80.0	15.152	208-230	1;4;5;6;9

Please refer to back cover for description of "NOTES"

For detailed specifications, data sheets, drawings and performance curves visit http://www.weg.net

Data subject to change without notice.

Motors | Automation | Energy | Transmission & Distribution | Coatings

MUCH MORE than your **Typical CAST IRON MOTOR**

You do not need a special motor for severe duty applications.
Severe Duty is standard with WEG W22 motors.

- Severe Duty (IP55)
- 1.25 SF (up to 100 HP)
- IEEE841 Vibration Levels
- Certified Class I, Div 2
- Inverter Rated 20:1 CT

Available in NEMA Premium or Super Premium Efficiency Levels

ASK WHAT WEG CAN DO FOR YOU!

Transforming energy into solutions. **www.weg.net/us | 1-800-ASK-4WEG**

TEFC – Foot Mount A-32
TEFC – C-Face – Foot Mount A-42
TEFC – C-Face – Footless A-46
ODP – Foot Mount A-50
ODP – C-Face – Foot Mount A-56
ODP – C-Face – Footless A-60
ODP – Resilient Base A-60

IEEE 841 - Three-Phase

TEFC – Foot Mount – NEMA Premium® A-62
TEFC – C-Face – Foot Mount – NEMA Premium® A-66
TEFC – C-Face – Footless – NEMA Premium® A-66

BRAKE MOTORS – Three-Phase

TEFC – Foot Mount A-69
TEFC – C-Face – Foot Mount A-70

IEC TRU-METRIC™ - Three-Phase

TEFC – Foot Mount A-73

Three Phase General Purpose Motors

W22 - CAST IRON

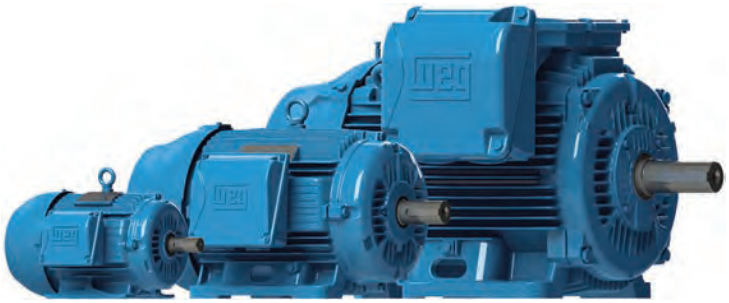

Standard Features:

- 50/60 Hz rated (380V on nameplate - 400/415 available)
- Rated 50HZ at same horsepower up to 250HP 1.0 Service Factor for 2,4 & 6 pole motors
- Rated 50Hz at same horsepower up to 125HP 1.0 Service Factor for 8 pole motors
- Class F insulation (impregnation resin and magnet wire are class H)
- F1 mounted (cast iron frames are F2 convertible). Frames 447T and up can easily be F2 converted by simply rotating the terminal box adapter
- Cast iron frames: regreasable ball bearings (frames 254T and up)
- Gasketed conduit box

Inverter Rated*

1000:1 for Variable Torque

NEMA Premium®

20:1 Constant Torque up to 250HP

6:1 Constant Torque 300HP and up

*** Insulated NDE housing standard on L447/9T and above**

ADDITIONAL TECHNICAL DATA

ELECTRICAL DATA:	B-12
MECHANICAL DATA:	B-68

Features that make a difference:

- All NEMA Premium® ratings have a 1.25 Service Factor (up to 100 HP) resulting in cooler operation and extended life of the motor
- All Cast Iron Construction, including Terminal Box and Fan Cover*
- Solid feet for reduced vibration levels and impact absorption
- Optimized ventilation system for cooler operation and extended life
- High Grade FC200 cast iron provides superior mechanical strength and heat dissipation
- All WEG W22 motors are Totally Enclosed Fan Cooled with a true IP55 rating against dust and moisture. (IP56, IP65 and IP66 available as options)
- Exclusive W-Seal 364T and larger provides superior bearing protection
- Taconite Labyrinth seal 586 Frame and larger
- Exclusive WEG painting system exceed 200hrs ASTM 117 corrosion test (Exceeds IEEE 841 standard)
- Balanced to 0.08 inches per second vibration limits (Meets IEEE 841 standard)
- Four Bolt Conduit Cover with glued Neoprene Gasket
- Impregnation Resin and magnet wire are insulation class H
- Stainless Steel Nameplate - Laser etched with high contrast background
- Corrosion Proof Drains
- Inverter Duty per NEMA MG1, Part 31
- Certified Class I Div 2, Groups A, B, C & D; Class II, Div 2, Groups F & G
- Suitable for IEEE45 and USCG 259 – Marine Duty

*Cast iron fan cover available as an option on 143-215T frames

W22

TEFC - Cast Iron

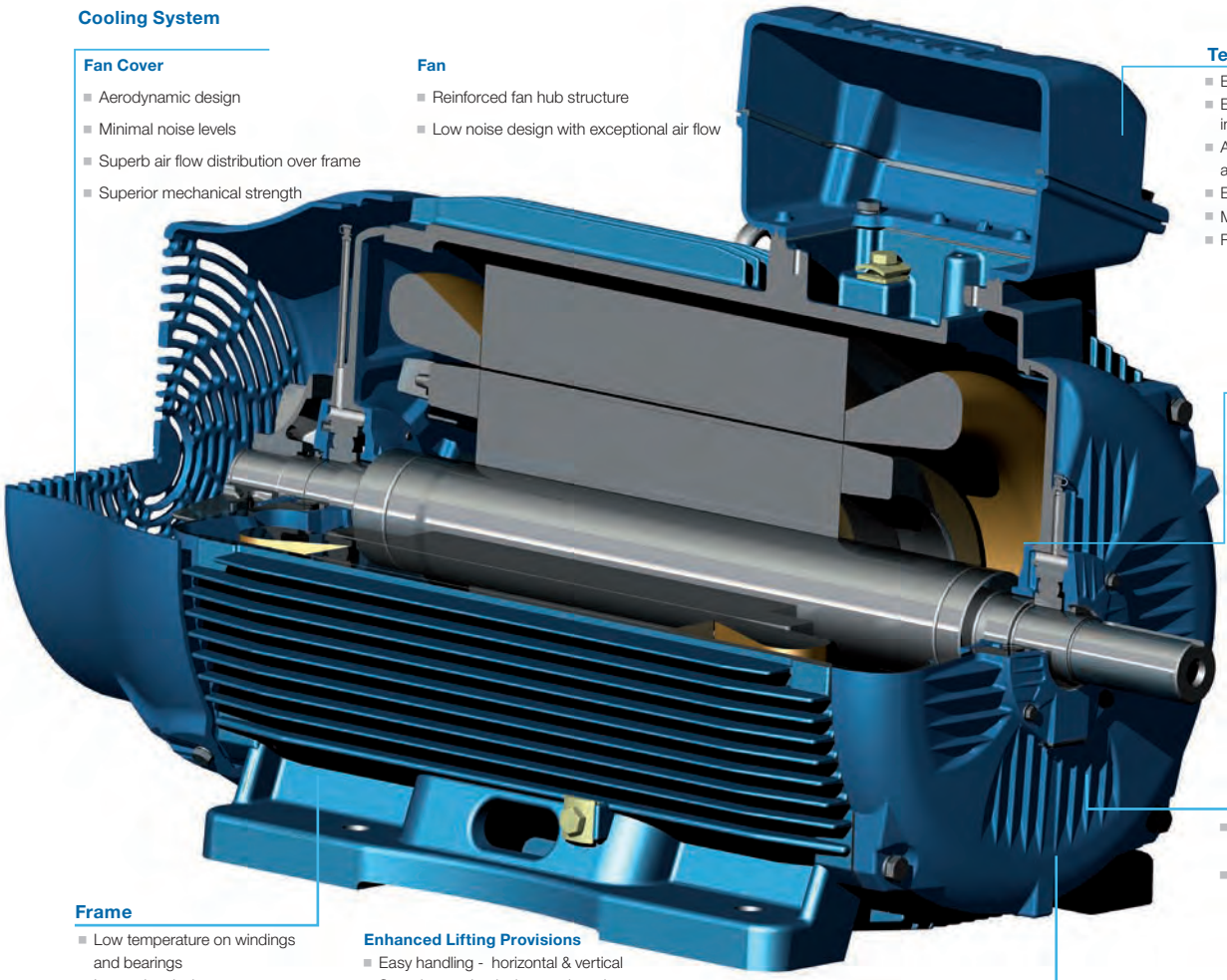

Cooling System

Fan Cover
- Aerodynamic design
- Minimal noise levels
- Superb air flow distribution over frame
- Superior mechanical strength

Fan
- Reinforced fan hub structure
- Low noise design with exceptional air flow

Terminal Box
- Excellent connection quality
- Easy cable handling during installation
- Ample space available for accessory installation
- Easy to maintain
- Mounting F1/F2/F3
- Rotation on 90° stages

Bearing Caps

External
- Finned surface for superb bearing heat dissipation

Internal
- Positive pressure lubrication system
- High quality bearing lubrication
- Reduced bearing temperature

Seal Subsystem
- Excellent dust and moisture protection
- Excellent protection to high-pressure cleaning

Frame
- Low temperature on windings and bearings
- Low noise design
- Terminal box position outlet on top 447T and larger

Pad for vibration sensor
- Displaced 90º from each other

Enhanced Lifting Provisions
- Easy handling - horizontal & vertical
- Superior mechanical strength and handling safety

Solid feet
- Impact resistance
- Ideal for high vibration level applications

Endshields Subsystem

DE (Drive Endshield)
- Fin design increases air flow
- Bearing moved outwards for better load support
- Bearing heat dissipation for reduced bearing temperature
- Reinforced endshield structure

NDE (Non-Drive Endshield)
- Smooth exterior surface
- Optimal air flow
- Designed for low noise
- Structural rigidity for low vibration
- Insulated housing standard on L447/9T and above

Three-Phase General Purpose Motors

TEFC - ROLLED STEEL

Standard Features:

- Rated Output: 0.25 to 25 HP
- Number of Poles: 2 to 6
- Class F insulation
- Frame Sizes: NEMA 56 to 254/6T
- Frequency: 60 Hz (dual rated 50 Hz 190-220/380-415V)
- F1 mount as standard
- Foot mount / C-face / Footless availability
- Enclosure: TEFC
- Aluminum endshields
- Cast Iron flanges for improved strength (182/4TC and larger)
- Internal bolts, giving a clean surface to the motor, avoiding trapping materials and allowing easy paint job after assembly to the load if required
- Double shielded ball bearings on frames 56 to 213/5T.
- Versions: General Purpose, Jet Pump, Close-coupled Pump type “JM” and “JP”, and Crop Dryer

Optional Features:

- IP56 ingress protection
- F2 and F3 mount
- Enclosure: TEAO and TENV
- Regreasable bearings optional on 182/4T and 213/5T
- Double sealed ball bearings and/or bearing cap
- Drip cover
- Internal AEGIS® SGR
- Space heaters and thermal protection (thermostats and thermistors)
- Refer to the mod section for more options

Features that make a difference:

- New ventilation system for improved thermal performance
- Robust foot design suitable for tougher applications
- New and more robust eyebolts design (frames 182/4T and up) plus a second eyebolt on non-drive end allowing vertical lifting capability (frames 213/5T and 254/6T)
- Oversized diagonally split aluminum terminal box that exceeds IP55 requirements
- Terminal box rotatable in 90 degrees increments for flexibility during installation
- Option for internal AEGIS® SGR
- Color coded leads as standard for easy wiring
- Regreasable ball bearings on 254/6T frame as standard (optional for 182/4T and 213/5T)
- IP55 Ingress Protection as standard, being appropriate for severe environments
- Bearing cap as standard on flanged motors, optional on non flanged
- Suitable for VFD operation as per NEMA MG1 part 31.4.4.2
- Motor frame painting system 500 hours salt spray resistant

ADDITIONAL TECHNICAL DATA

ELECTRICAL DATA: B-15

MECHANICAL DATA: B-71

TEFC - Foot Mount

HP	kW	RPM	Frame	Catalog Number	List Price	Mult. Symbol	Approx. Shipping Weight (lbs)	Service Factor	FL Amps @ High	FL. Eff (%)	"C" Dimension (in)	Voltage (V)	Notes
0.25	0.18	3600	56	.2536ES3E56-S	$237	F1	21	1.15	0.50	57.5	11.142	208-230/460	9
		1800	56	.2518ES3E56-S	$249	F1	23	1.15	0.50	70.0	11.142	208-230/460	9
0.33	0.25	3600	56	.3336ES3E56-S	$249	F1	22	1.15	0.60	62.0	11.142	208-230/460	9
		1800	56	.3318ES3E56-S	$253	F1	24	1.15	0.60	74.0	11.535	208-230/460	9
0.5	0.37	3600	56	.5036ES3E56-S	$258	F1	24	1.15	0.80	68.0	11.535	208-230/460	9
		1800	56	.5018ES3E56-S	$287	F1	26	1.15	0.90	77.0	11.535	208-230/460	9
		1800	56	.5018ES3H56-S	$288	F1	26	1.15	0.70	77.0	11.535	575	9
		1200	56	.5012ES3E56-S	$417	F1	31	1.15	1.00	72.0	12.323	208-230/460	9
0.75	0.55	3600	56	.7536ES3E56-S	$287	F1	25	1.15	1.10	72.0	11.535	208-230/460	9
		3600	56	.7536ES3H56-S	$288	F1	25	1.15	0.90	72.0	11.535	575	9
		1800	56	.7518ES3E56-S	$311	F1	28	1.15	1.20	78.5	11.929	208-230/460	9
		1200	56H	.7512ES3E56-S	$427	F1	34	1.15	1.30	75.5	12.716	208-230/460	9
1	0.75	3600	W56	00136ET3EW56-S	$392	F1	25	1.15	1.50	78.5	11.106	230/460	9
		3600	W56	00136ET3HW56-S	$392	F1	25	1.15	1.20	78.5	11.106	575	9
		3600	143/5T	00136ET3E143T-S	$420	RSP	31	1.15	1.40	78.5	13.189	230/460	9
		3600	143/5T	00136ET3H143T-S	$420	RSP	31	1.15	1.10	78.5	13.189	575	9
		3600	143/5T	00136ET3E143T-W22	$538	N1	45	1.25	1.44	81.5	13.358	230/460	
		3600	143/5T	00136ET3H143T-W22	$538	N1	44	1.25	1.15	81.5	13.358	575	
		1800	56	00118ET3E56-S	$379	F1	41	1.15	1.50	85.5	13.504	230/460	9
		1800	56	00118ET3H56-S	$379	F1	41	1.15	1.20	85.5	13.504	575	9
		1800	143/5T	00118ET3E143T-S	$459	RSP	42	1.15	1.50	85.5	13.583	230/460	9
		1800	143/5T	00118ET3H143T-S	$459	RSP	42	1.15	1.20	85.5	13.583	575	9
		1800	143/5T	00118ET3E143T-W22	$527	N1	48	1.25	1.47	85.5	13.358	230/460	
		1800	143/5T	00118ET3H143T-W22	$527	N1	48	1.25	1.18	85.5	13.358	575	
		1200	56H	00112ET3E56-S	$497	F1	42	1.15	1.60	82.5	13.504	230/460	9
		1200	143/5T	00112ET3E145T-S	$529	RSP	43	1.15	1.60	82.5	13.583	230/460	9
		1200	143/5T	00112ET3H145T-S	$529	RSP	43	1.15	1.30	82.5	13.583	575	9
		1200	143/5T	00112ET3E145T-W22	$608	N1	55	1.25	1.73	82.5	13.358	230/460	
		1200	143/5T	00112ET3H145T-W22	$608	N1	55	1.25	1.38	82.5	13.358	575	
		900	182/4T	00109ET3E182T-W22	$1,043	N1	88	1.25	2.30	78.5	15.860	230/460	
		900	182/4T	00109ET3H182T-W22	$1,043	N1	104	1.25	1.84	78.5	15.860	575	

continued on next page

Please refer to back cover for description of "NOTES"

For detailed specifications, data sheets, drawings and performance curves visit http://www.weg.net

Data subject to change without notice.

TEFC - Foot Mount - *continued*

HP	kW	RPM	Frame	Catalog Number	List Price	Mult. Symbol	Approx. Shipping Weight (lbs)	Service Factor	FL Amps @ High	FL. Eff (%)	"C" Dimension (in)	Voltage (V)	Notes
1.5	1.1	3600	56	00156ET3E56-S	$433	F1	37	1.15	1.90	84.0	13.109	230/460	9
		3600	143/5T	00156ET3E143T-S	$473	RSP	39	1.15	1.90	84.0	13.189	230/460	9
		3600	143/5T	00156ET3H143T-S	$473	RSP	39	1.15	1.50	84.0	13.189	575	9
		3600	143/5T	00156ET3E143T-W22	$543	N1	49	1.25	1.96	84.0	13.358	230/460	
		3600	143/5T	00156ET3H143T-W22	$543	N1	49	1.25	1.57	84.0	13.358	575	
		1800	56H	00158ET3E56-S	$435	F1	44	1.15	2.00	86.5	13.504	230/460	9
		1800	143/5T	00158ET3E145T-S	$480	RSP	43	1.15	2.00	86.5	13.583	230/460	9
		1800	143/5T	00158ET3H145T-S	$480	RSP	43	1.15	1.60	86.5	13.583	575	9
		1800	143/5T	00158ET3E145T-W22	$551	N1	53	1.25	2.02	86.5	13.358	230/460	
		1800	143/5T	00158ET3H145T-W22	$551	N1	53	1.25	1.62	86.5	13.358	575	
		1200	182/4T	00152ET3E182T-S	$656	RSP	76	1.15	2.20	87.5	16.339	230/460	9
		1200	182/4T	00152ET3H182T-S	$656	RSP	76	1.15	1.80	87.5	16.339	575	9
		1200	182/4T	00152ET3E182T-W22	$754	N1	97	1.25	2.54	87.5	15.860	230/460	
		1200	182/4T	00152ET3H182T-W22	$754	N1	97	1.25	2.03	87.5	15.860	575	
		900	182/4T	00159ET3E184T-W22	$1,207	N1	102	1.25	2.70	82.5	15.860	230/460	
		900	182/4T	00159ET3H184T-W22	$1,207	N1	102	1.25	2.16	82.5	15.860	575	
2	1.5	3600	56H	00236ET3E56-S	$489	F1	44	1.15	2.50	85.5	13.898	230/460	9
		3600	143/5T	00236ET3E145T-S	$514	RSP	45	1.15	2.50	85.5	13.976	230/460	9
		3600	143/5T	00236ET3H145T-S	$514	RSP	45	1.15	2.00	85.5	13.976	575	9
		3600	143/5T	00236ET3E145T-W22	$591	N1	54	1.25	2.56	85.5	13.358	230/460	
		3600	143/5T	00236ET3H145T-W22	$591	N1	54	1.25	2.05	85.5	13.358	575	
		1800	56H	00218ET3E56-S	$478	F1	46	1.15	2.70	86.5	13.898	230/460	9
		1800	143/5T	00218ET3E145T-S	$533	RSP	47	1.15	2.70	86.5	13.976	230/460	9
		1800	143/5T	00218ET3H145T-S	$533	RSP	47	1.15	2.20	86.5	13.976	575	9
		1800	143/5T	00218ET3E145T-W22	$612	N1	51	1.25	2.76	86.5	13.358	230/460	
		1800	143/5T	00218ET3H145T-W22	$612	N1	54	1.25	2.21	86.5	13.358	575	
		1200	182/4T	00212ET3E184T-S	$713	RSP	86	1.15	3.00	88.5	17.126	230/460	9
		1200	182/4T	00212ET3H184T-S	$713	RSP	86	1.15	2.40	88.5	17.126	575	9
		1200	182/4T	00212ET3E184T-W22	$819	N1	108	1.25	3.22	88.5	15.860	230/460	39
		1200	182/4T	00212ET3H184T-W22	$819	N1	103	1.25	2.58	88.5	15.860	575	39
		900	213/5T	00209ET3E213T-W22	$1,848	N1	171	1.25	3.39	85.5	19.517	230/460	
		900	213/5T	00209ET3H213T-W22	$1,848	N1	171	1.25	2.71	85.5	19.517	575	

continued on next page

Please refer to back cover for description of "NOTES"

For detailed specifications, data sheets, drawings and performance curves visit http://www.weg.net

TEFC - Foot Mount - *continued*

HP	kW	RPM	Frame	Catalog Number	List Price	Mult. Symbol	Approx. Shipping Weight (lbs)	Service Factor	FL Amps @ High	FL. Eff (%)	"C" Dimension (in)	Voltage (V)	Notes
3	2.2	3600	56H	00336ET3E56-S	$578	F1	54	1.15	3.50	86.5	15.079	230/460	9
		3600	182/4T	00336ET3E182T-S	$665	RSP	73	1.15	3.70	86.5	16.339	230/460	9
		3600	182/4T	00336ET3H182T-S	$665	RSP	73	1.15	3.00	86.5	16.339	575	9
		3600	182/4T	00336ET3E182T-W22	$763	N1	99	1.25	3.63	86.5	15.860	230/460	
		3600	182/4T	00336ET3H182T-W22	$763	N1	99	1.25	2.90	86.5	15.860	575	
		1800	182/4T	00318ET3E182T-S	$577	RSP	100	1.15	3.80	89.5	17.913	230/460	9
		1800	182/4T	00318ET3H182T-S	$577	RSP	100	1.15	3.00	89.5	17.913	575	9
		1800	182/4T	00318ET3E182T-W22	$663	N1	92	1.25	3.91	89.5	15.860	230/460	
		1800	182/4T	00318ET3H182T-W22	$663	N1	94	1.25	3.13	89.5	15.860	575	
		1200	213/5T	00312ET3E213T-S	$983	RSP	134	1.15	4.20	89.5	19.291	230/460	9
		1200	213/5T	00312ET3H213T-S	$983	RSP	133	1.15	3.40	89.5	19.291	575	9
		1200	213/5T	00312ET3E213T-W22	$1,129	N1	160	1.25	4.41	89.5	19.517	230/460	
		1200	213/5T	00312ET3H213T-W22	$1,129	N1	163	1.25	3.53	89.5	19.517	575	
		900	213/5T	00309ET3E215T-W22	$2,115	N1	189	1.25	4.55	85.5	19.517	230/460	
		900	213/5T	00309ET3H215T-W22	$2,115	N1	188	1.25	3.64	85.5	19.517	575	
5	3.7	3600	182/4T	00536ET3E184T-SRT	$810	RSP	85	1.15	5.90	88.5	16.339	230/460	9
		3600	182/4T	00536ET3E184T-S	$760	RSP	85	1.15	5.90	88.5	17.913	230/460	9
		3600	182/4T	00536ET3H184T-S	$760	RSP	85	1.15	4.70	88.5	17.913	575	9
		3600	182/4T	00536ET3E184T-W22	$873	N1	103	1.25	5.90	88.5	15.860	230/460	
		3600	182/4T	00536ET3H184T-W22	$873	N1	106	1.25	4.72	88.5	15.860	575	
		1800	182/4T	00518ET3E184T-SRT	$840	RSP	93	1.15	6.49	89.5	16.732	230/460	9
		1800	182/4T	00518ET3H184T-SRT	$840	RSP	93	1.15	5.19	89.5	16.732	575	9
		1800	182/4T	00518ET3E184T-S	$672	RSP	93	1.15	6.50	89.5	17.913	230/460	9
		1800	182/4T	00518ET3H184T-S	$672	RSP	93	1.15	5.20	89.5	17.913	575	9
		1800	182/4T	00518ET3P184T-S	$672	RSP	93	1.15	15.0	89.5	17.913	200	9
		1800	182/4T	00518ET3E184T-W22	$772	N1	101	1.25	6.45	89.5	15.860	230/460	
		1800	182/4T	00518ET3H184T-W22	$772	N1	104	1.25	5.16	89.5	15.860	575	
		1800	182/4T	00518ET3P184T-W22	$772	N1	103	1.25	14.8	89.5	15.860	200	
		1200	213/5T	00512ET3E215T-S	$1,160	RSP	153	1.15	6.70	89.5	20.079	230/460	9
		1200	213/5T	00512ET3H215T-S	$1,160	RSP	152	1.15	5.40	89.5	20.079	575	9
		1200	213/5T	00512ET3E215T-W22	$1,332	N1	170	1.25	6.83	89.5	19.517	230/460	
		1200	213/5T	00512ET3H215T-W22	$1,332	N1	180	1.25	5.46	89.5	19.517	575	
		900	254/6T	00509ET3E254T-W22	$3,301	N1	302	1.25	7.58	87.5	24.945	230/460	
		900	254/6T	00509ET3H254T-W22	$3,301	N1	321	1.25	6.06	87.5	24.945	575	

continued on next page

Please refer to back cover for description of "NOTES"

For detailed specifications, data sheets, drawings and performance curves visit http://www.weg.net

Data subject to change without notice.

TEFC - Foot Mount - *continued*

HP	kW	RPM	Frame	Catalog Number	List Price	Mult. Symbol	Approx. Shipping Weight (lbs)	Service Factor	FL Amps @ High	FL. Eff (%)	"C" Dimension (in)	Voltage (V)	Notes
7.5	5.5	3600	182/4T	00736ET3E184T-W22	$1,074	N1	106	1.25	8.76	89.5	15.860	230/460	12
		3600	213/5T	00736ET3E213T-SRT	$1,078	RSP	126	1.15	8.67	89.5	18.897	230/460	9
		3600	213/5T	00736ET3E213T-S	$980	RSP	143	1.15	8.70	89.5	20.079	230/460	9
		3600	213/5T	00736ET3H213T-S	$980	RSP	143	1.15	7.00	89.5	20.079	575	9
		3600	213/5T	00736ET3E213T-W22	$1,125	N1	149	1.25	8.76	89.5	19.517	230/460	
		3600	213/5T	00736ET3H213T-W22	$1,125	N1	163	1.25	7.01	89.5	19.517	575	
		1800	213/5T	00718ET3E213T-S	$948	RSP	140	1.15	9.10	91.7	18.898	230/460	9
		1800	213/5T	00718ET3H213T-S	$948	RSP	140	1.15	7.30	91.7	18.898	575	9
		1800	213/5T	00718ET3P213T-S	$948	RSP	140	1.15	20.9	91.7	18.898	200	9
		1800	213/5T	00718ET3E213T-W22	$1,089	N1	170	1.25	9.18	91.7	19.517	230/460	
		1800	213/5T	00718ET3H213T-W22	$1,089	N1	174	1.25	7.34	91.7	19.517	575	
		1800	213/5T	00718ET3P213T-W22	$1,089	N1	175	1.25	21.1	91.7	19.517	200	
		1200	254/6T	00712ET3E254T-S	$1,799	RSP	231	1.15	10.0	91.0	22.559	230/460	9
		1200	254/6T	00712ET3H254T-S	$1,799	RSP	229	1.15	8.00	91.0	22.559	575	9
		1200	254/6T	00712ET3E254T-W22	$2,065	N1	300	1.25	9.48	91.0	24.945	230/460	
		1200	254/6T	00712ET3H254T-W22	$2,065	N1	316	1.25	7.58	91.0	24.945	575	39
		900	254/6T	00709ET3E256T-W22	$3,658	N1	317	1.25	11.1	87.5	24.945	230/460	
		900	254/6T	00709ET3H256T-W22	$3,658	N1	373	1.25	8.88	87.5	24.945	575	
10	7.5	3600	213/5T	01036ET3E215T-SRT	$1,276	RSP	178	1.15	11.5	90.2	19.291	230/460	9
		3600	213/5T	01036ET3E215T-S	$1,160	RSP	178	1.15	11.5	90.2	21.654	230/460	9
		3600	213/5T	01036ET3H215T-S	$1,160	RSP	178	1.15	9.20	90.2	21.654	575	9
		3600	213/5T	01036ET3E215T-W22	$1,332	N1	172	1.25	11.6	90.2	19.517	230/460	
		3600	213/5T	01036ET3H215T-W22	$1,332	N1	180	1.25	9.28	90.2	19.517	575	
		1800	213/5T	01018ET3E215T-S	$1,110	RSP	151	1.15	12.2	91.7	19.291	230/460	9
		1800	213/5T	01018ET3H215T-S	$1,110	RSP	151	1.15	9.80	91.7	19.291	575	9
		1800	213/5T	01018ET3E215T-W22	$1,273	N1	175	1.25	12.4	91.7	19.517	230/460	
		1800	213/5T	01018ET3H215T-W22	$1,273	N1	188	1.25	9.92	91.7	19.517	575	
		1800	213/5T	01018ET3P215T-W22	$1,273	N1	189	1.25	28.5	91.7	19.517	200	
		1200	254/6T	01012ET3E256T-S	$2,088	RSP	261	1.15	13.8	91.0	23.346	230/460	9
		1200	254/6T	01012ET3H256T-S	$2,088	RSP	259	1.15	11.0	91.0	23.346	575	9
		1200	254/6T	01012ET3E256T-W22	$2,396	N1	318	1.25	12.9	91.0	24.945	230/460	
		1200	254/6T	01012ET3H256T-W22	$2,396	N1	325	1.25	10.3	91.0	24.945	575	
		900	284/6T	01009ET3E284T-W22	$4,634	N1	373	1.25	13.4	90.2	27.929	230/460	
		900	284/6T	01009ET3H284T-W22	$4,634	N1	371	1.25	10.7	90.2	27.929	575	

continued on next page

Please refer to back cover for description of "NOTES"

For detailed specifications, data sheets, drawings and performance curves visit http://www.weg.net

TEFC - Foot Mount - *continued*

HP	kW	RPM	Frame	Catalog Number	List Price	Mult. Symbol	Approx. Shipping Weight (lbs)	Service Factor	FL Amps @ High	FL. Eff (%)	"C" Dimension (in)	Voltage (V)	Notes
15	11	3600	213/5T	01536ET3E215T-W22	$1,697	N1	192	1.25	17.0	91.0	19.517	230/460	12
		3600	254/6T	01536ET3E254T-S	$1,589	RSP	216	1.15	17.4	91.0	22.559	230/460	9
		3600	254/6T	01536ET3H254T-S	$1,589	RSP	216	1.15	13.9	91.0	22.559	575	9
		3600	254/6T	01536ET3E254T-W22	$1,824	N1	293	1.25	17.2	91.0	24.945	230/460	
		3600	254/6T	01536ET3H254T-W22	$1,824	N1	298	1.25	13.8	91.0	24.945	575	
		1800	254/6T	01518ET3E254T-S	$1,610	RSP	248	1.15	18.2	92.4	22.559	230/460	9
		1800	254/6T	01518ET3H254T-S	$1,610	RSP	248	1.15	14.6	92.4	22.559	575	9
		1800	254/6T	01518ET3P254T-S	$1,610	RSP	248	1.15	41.9	92.4	22.559	200	9
		1800	254/6T	01518ET3E254T-W22	$1,848	N1	339	1.25	18.0	92.4	24.945	230/460	
		1800	254/6T	01518ET3H254T-W22	$1,848	N1	347	1.25	14.4	92.4	24.945	575	
		1800	254/6T	01518ET3P254T-W22	$1,848	N1	349	1.25	41.4	92.4	24.945	200	
		1200	284/6TS	01512ET3E284TS-W22	$3,291	N1	420	1.25	17.9	91.7	26.557	230/460	
		1200	284/6TS	01512ET3H284TS-W22	$3,291	N1	360	1.25	14.3	91.7	26.557	575	
		1200	284/6T	01512ET3E284T-W22	$3,291	N1	406	1.25	17.9	91.7	27.929	230/460	
		1200	284/6T	01512ET3H284T-W22	$3,291	N1	420	1.25	14.3	91.7	27.929	575	
		900	284/6T	01509ET3E286T-W22	$5,368	N1	429	1.25	19.4	90.2	27.929	230/460	
		900	284/6T	01509ET3H286T-W22	$5,368	N1	428	1.25	15.5	90.2	27.929	575	
20	15	3600	254/6T	02036ET3E256T-S	$2,076	RSP	256	1.15	22.7	91.0	23.346	230/460	9
		3600	254/6T	02036ET3H256T-S	$2,076	RSP	256	1.15	18.2	91.0	23.346	575	9
		3600	254/6T	02036ET3E256T-W22	$2,382	N1	317	1.25	23.2	91.0	24.945	230/460	
		3600	254/6T	02036ET3H256T-W22	$2,382	N1	323	1.25	18.6	91.0	24.945	575	
		1800	254/6T	02018ET3E256T-S	$1,918	RSP	279	1.15	24.7	92.4	23.346	230/460	9
		1800	254/6T	02018ET3H256T-S	$1,918	RSP	279	1.15	19.8	93.0	23.346	575	9
		1800	254/6T	02018ET3E256T-W22	$2,201	N1	386	1.25	24.1	93.0	24.945	230/460	
		1800	254/6T	02018ET3H256T-W22	$2,201	N1	396	1.25	19.3	93.0	24.945	575	
		1800	254/6T	02018ET3P256T-W22	$2,201	N1	397	1.25	55.4	93.0	24.945	200	
		1200	284/6T	02012ET3E286T-W22	$3,962	N1	432	1.25	24.2	91.7	27.929	230/460	
		1200	284/6T	02012ET3H286T-W22	$3,962	N1	447	1.25	19.4	91.7	27.929	575	
		900	284/6T	02009ET3E286T-W22	$5,854	N1	556	1.00	28.2	90.2	27.929	230/460	1;12;37
		900	324/6T	02009ET3E324T-W22	$6,339	N1	548	1.25	28.3	91.0	31.116	230/460	
		900	324/6T	02009ET3H324T-W22	$6,339	N1	546	1.25	22.6	91.0	31.116	575	
25	18.5	3600	254/6T	02536ET3E256T-S	$2,487	RSP	252	1.15	28.5	91.7	23.346	230/460	9
		3600	284/6TS	02536ET3E284TS-W22	$2,998	N1	391	1.25	28.5	91.7	26.557	230/460	
		3600	284/6TS	02536ET3H284TS-W22	$2,998	N1	405	1.25	22.8	91.7	26.557	575	
		1800	284/6TS	02518ET3E284TS-W22	$2,743	N1	438	1.25	29.5	93.6	26.557	230/460	
		1800	284/6T	02518ET3E284T-W22	$2,743	N1	408	1.25	29.5	93.6	27.929	230/460	
		1800	284/6T	02518ET3H284T-W22	$2,743	N1	439	1.25	23.6	93.6	27.929	575	
		1200	324/6T	02512ET3E324T-W22	$4,737	N1	569	1.25	30.4	93.0	31.116	230/460	
		1200	324/6T	02512ET3H324T-W22	$4,737	N1	583	1.25	24.3	93.0	31.116	575	
		900	324/6T	02509ET3E326T-W22	$7,315	N1	593	1.25	35.9	91.0	31.116	230/460	
		900	324/6T	02509ET3H326T-W22	$7,315	N1	593	1.25	28.7	91.0	31.116	575	

continued on next page

Please refer to back cover for description of "NOTES"

For detailed specifications, data sheets, drawings and performance curves visit http://www.weg.net

Data subject to change without notice.

TEFC - Foot Mount - *continued*

HP	kW	RPM	Frame	Catalog Number	List Price	Mult. Symbol	Approx. Shipping Weight (lbs)	Service Factor	FL Amps @ High	FL. Eff (%)	"C" Dimension (in)	Voltage (V)	Notes
30	22	3600	284/6TS	03036ET3E286TS-W22	$3,561	N1	408	1.25	33.8	91.7	26.557	230/460	
		3600	284/6TS	03036ET3H286TS-W22	$3,561	N1	425	1.25	27.0	91.7	26.557	575	
		1800	284/6TS	03018ET3E286TS-W22	$3,223	N1	476	1.25	35.1	93.6	26.557	230/460	
		1800	284/6T	03018ET3E286T-W22	$3,223	N1	461	1.25	35.1	93.6	27.929	230/460	
		1800	284/6T	03018ET3H286T-W22	$3,223	N1	476	1.25	28.1	93.6	27.929	575	
		1200	324/6T	03012ET3E326T-W22	$5,273	N1	530	1.25	36.2	93.0	31.116	230/460	
		1200	324/6T	03012ET3H326T-W22	$5,273	N1	627	1.25	29.0	93.0	31.116	575	
		900	364/5T	03009ET3E364T-W22	$11,215	N1	899	1.25	37.0	92.4	34.251	230/460	
40	30	3600	324/6TS	04036ET3E324TS-W22	$4,725	N1	546	1.25	45.8	92.4	29.616	230/460	
		3600	324/6TS	04036ET3H324TS-W22	$4,725	N1	589	1.25	36.6	92.4	29.616	575	
		1800	324/6TS	04018ET3E324TS-W22	$4,178	N1	613	1.25	47.1	94.1	31.116	230/460	
		1800	324/6T	04018ET3E324T-W22	$4,178	N1	591	1.25	47.1	94.1	31.116	230/460	
		1800	324/6T	04018ET3H324T-W22	$4,178	N1	614	1.25	37.7	94.1	31.116	575	
		1800	324/6T	04018ET3P324T-W22	$4,178	N1	625	1.25	108	94.1	31.116	200	
		1200	364/5T	04012ET3E364T-W22	$7,284	N1	964	1.25	46.5	94.1	34.251	230/460	
		1200	364/5T	04012ET3H364T-W22	$7,284	N1	904	1.25	37.2	94.1	34.251	575	
		900	364/5T	04009ET3E365T-W22	$12,194	N1	954	1.25	50.3	92.4	34.251	230/460	
50	37	3600	324/6TS	05036ET3E326TS-W22	$5,316	N1	587	1.25	56.1	93.0	29.616	230/460	
		3600	324/6TS	05036ET3H326TS-W22	$5,316	N1	610	1.25	44.9	93.0	29.616	575	
		1800	324/6TS	05018ET3E326TS-W22	$5,100	N1	637	1.25	59.2	94.5	31.116	230/460	
		1800	324/6T	05018ET3E326T-W22	$5,100	N1	585	1.25	59.2	94.5	31.116	230/460	
		1800	324/6T	05018ET3H326T-W22	$5,100	N1	634	1.25	47.4	94.5	31.116	575	
		1200	364/5T	05012ET3E365T-W22	$8,518	N1	914	1.25	57.4	94.1	34.251	230/460	
		1200	364/5T	05012ET3H365T-W22	$8,518	N1	1026	1.25	45.9	94.1	34.251	575	
		900	404/5T	05009ET3E404T-W22	$17,648	N1	1214	1.25	60.0	93.0	39.730	230/460	
60	45	3600	364/5TS	06036ET3E364TS-W22	$7,552	N1	855	1.25	67.0	93.6	32.338	230/460	
		3600	364/5TS	06036ET3G364TS-W22	$7,552	N1	961	1.25	67.0	93.6	32.338	460	
		3600	364/5TS	06036ET3H364TS-W22	$7,552	N1	968	1.25	53.6	93.6	32.338	575	
		1800	364/5TS	06018ET3E364TS-W22	$7,389	N1	1026	1.25	68.3	95.0	32.338	230/460	
		1800	364/5T	06018ET3E364T-W22	$7,389	N1	946	1.25	68.3	95.0	34.251	230/460	
		1800	364/5T	06018ET3G364T-W22	$7,389	N1	1025	1.25	68.3	95.0	34.251	460	
		1800	364/5T	06018ET3H364T-W22	$7,389	N1	1033	1.25	54.6	95.0	34.251	575	
		1200	404/5T	06012ET3E404T-W22	$10,497	N1	1252	1.25	69.5	94.5	39.730	230/460	
		1200	404/5T	06012ET3ERB404T-W22	$10,497	N1	1262	1.25	69.5	94.5	39.730	230/460	14
		1200	404/5T	06012ET3G404T-W22	$10,497	N1	1213	1.25	69.5	94.5	39.730	460	
		1200	404/5T	06012ET3H404T-W22	$10,497	N1	1255	1.25	55.6	94.5	39.730	575	
		900	404/5T	06009ET3E405T-W22	$20,443	N1	1263	1.25	73.0	93.0	39.730	230/460	

continued on next page

Please refer to back cover for description of "NOTES"

For detailed specifications, data sheets, drawings and performance curves visit http://www.weg.net

TEFC - Foot Mount - *continued*

HP	kW	RPM	Frame	Catalog Number	List Price	Mult. Symbol	Approx. Shipping Weight (lbs)	Service Factor	FL Amps @ High	FL. Eff (%)	"C" Dimension (in)	Voltage (V)	Notes
		3600	364/5TS	07536ET3E365TS-W22	$9,091	N1	900	1.25	81.9	93.6	32.338	230/460	
		3600	364/5TS	07536ET3G365TS-W22	$9,091	N1	963	1.25	81.9	93.6	32.338	460	
		3600	364/5TS	07536ET3H365TS-W22	$9,091	N1	967	1.25	65.5	93.6	32.338	575	
		1800	364/5TS	07518ET3E365TS-W22	$8,705	N1	988	1.25	84.1	95.4	32.338	230/460	
		1800	364/5T	07518ET3E365T-W22	$8,705	N1	969	1.25	84.1	95.4	34.251	230/460	
		1800	364/5T	07518ET3G365T-W22	$8,705	N1	1045	1.25	84.1	95.4	34.251	460	
75	55	1800	364/5T	07518ET3H365T-W22	$8,705	N1	1050	1.25	67.3	95.4	34.251	575	
		1200	404/5T	07512ET3E405T-W22	$12,058	N1	1303	1.25	84.9	94.5	39.730	230/460	
		1200	404/5T	07512ET3ERB405T-W22	$12,058	N1	1262	1.25	84.9	94.5	39.730	230/460	14
		1200	404/5T	07512ET3G405T-W22	$12,058	N1	1298	1.25	84.9	94.5	39.730	460	
		1200	404/5T	07512ET3GRB405T-W22	$12,058	N1	1309	1.25	84.9	94.5	39.730	460	14
		1200	404/5T	07512ET3H405T-W22	$12,058	N1	1303	1.25	67.9	94.5	39.730	575	
		900	444/5T	07509ET3E444T-W22	$23,334	N1	1665	1.25	93.0	93.6	45.157	230/460	
		3600	404/5TS	10036ET3E405TS-W22	$12,002	N1	1024	1.25	110	94.1	36.732	230/460	
		3600	404/5TS	10036ET3G405TS-W22	$12,002	N1	1176	1.25	110	94.1	36.732	460	
		3600	404/5TS	10036ET3H405TS-W22	$12,002	N1	1182	1.25	88.0	94.1	36.732	575	
		1800	404/5TS	10018ET3E405TS-W22	$11,689	N1	1266	1.25	111	95.4	36.732	230/460	
		1800	404/5T	10018ET3E405T-W22	$11,689	N1	1190	1.25	111	95.4	39.730	230/460	
		1800	404/5T	10018ET3ERB405T-W22	$11,689	N1	1239	1.25	111	95.4	39.730	230/460	14
		1800	404/5T	10018ET3G405T-W22	$11,689	N1	1280	1.25	111	95.4	39.730	460	
		1800	404/5T	10018ET3GRB405T-W22	$11,689	N1	1199	1.25	111	95.4	39.730	460	14
100	75	1800	404/5T	10018ET3H405T-W22	$11,689	N1	1283	1.25	88.8	95.4	39.730	575	
		1800	404/5T	10018ET3HRB405T-W22	$11,689	N1	1294	1.25	88.8	95.4	39.730	575	14
		1200	444/5T	10012ET3E444T-W22	$15,631	N1	1786	1.25	121	95.0	45.157	230/460	
		1200	444/5T	10012ET3ERB444T-W22	$15,631	N1	1859	1.25	121	95.0	45.157	230/460	14
		1200	444/5T	10012ET3G444T-W22	$15,631	N1	1840	1.25	121	95.0	45.157	460	
		1200	444/5T	10012ET3GRB444T-W22	$15,631	N1	1854	1.25	121	95.0	45.157	460	14
		1200	444/5T	10012ET3H444T-W22	$15,631	N1	1837	1.25	96.8	95.0	45.157	575	
		900	444/5T	10009ET3E445T-W22	$26,988	N1	1900	1.25	127	94.1	45.157	230/460	
		900	444/5T	10009ET3G445T-W22	$26,988	N1	1939	1.25	127	94.1	45.157	460	

continued on next page

Please refer to back cover for description of "NOTES"

For detailed specifications, data sheets, drawings and performance curves visit http://www.weg.net

Data subject to change without notice.

TEFC - Foot Mount - *continued*

HP	kW	RPM	Frame	Catalog Number	List Price	Mult. Symbol	Approx. Shipping Weight (lbs)	Service Factor	FL Amps @ High	FL. Eff (%)	"C" Dimension (in)	Voltage (V)	Notes
125	90	3600	444/5TS	12536ET3E444TS-W22	$15,350	N1	1802	1.15	134	95.0	41.407	230/460	
		3600	444/5TS	12536ET3G444TS-W22	$15,350	N1	1798	1.15	134	95.0	41.407	460	
		3600	444/5TS	12536ET3H444TS-W22	$15,350	N1	1795	1.15	107	95.0	41.407	575	
		1800	444/5TS	12518ET3E444TS-W22	$14,748	N1	1627	1.15	139	95.4	41.407	230/460	
		1800	444/5T	12518ET3E444T-W22	$14,748	N1	1699	1.15	139	95.4	45.157	230/460	
		1800	444/5T	12518ET3ERB444T-W22	$14,748	N1	1730	1.15	139	95.4	45.157	230/460	14
		1800	444/5T	12518ET3G444T-W22	$14,748	N1	1710	1.15	139	95.4	45.157	460	
		1800	444/5T	12518ET3GRB444T-W22	$14,748	N1	1736	1.15	139	95.4	45.157	460	14
		1800	444/5T	12518ET3H444T-W22	$14,748	N1	1815	1.15	111	95.4	45.157	575	
		1200	444/5T	12512ET3E445T-W22	$17,947	N1	1980	1.15	143	95.0	45.157	230/460	
		1200	444/5T	12512ET3ERB445T-W22	$17,947	N1	1993	1.15	143	95.0	45.157	230/460	14
		1200	444/5T	12512ET3G445T-W22	$17,947	N1	1893	1.15	143	95.0	45.157	460	
		1200	444/5T	12512ET3GRB445T-W22	$17,947	N1	1996	1.15	143	95.0	45.157	460	14
		1200	444/5T	12512ET3H445T-W22	$17,947	N1	1974	1.15	114	95.0	45.157	575	
		900	445/7T	12509ET3G447T-W22	$28,175	N1	2235	1.15	151	94.5	48.701	460	
150	110	3600	444/5TS	15036ET3E445TS-W22	$18,882	N1	1899	1.15	161	95.0	41.407	230/460	
		3600	444/5TS	15036ET3G445TS-W22	$18,882	N1	1908	1.15	161	95.0	41.407	460	
		1800	444/5TS	15018ET3G445TS-W22	$17,420	N1	1869	1.15	170	95.8	41.407	460	
		1800	444/5T	15018ET3E445T-W22	$17,420	N1	1918	1.15	170	95.8	45.157	230/460	
		1800	444/5T	15018ET3G445T-W22	$17,420	N1	1905	1.15	170	95.8	45.157	460	
		1800	444/5T	15018ET3GRB445T-W22	$17,420	N1	1853	1.15	170	95.8	45.157	460	14
		1800	444/5T	15018ET3H445T-W22	$17,420	N1	1958	1.15	136	95.8	45.157	575	
		1800	444/5T	15018ET3HRB445T-W22	$17,420	N1	2034	1.15	136	95.8	45.157	575	14
		1200	445/7T	15012ET3E447T-W22	$20,639	N1	2354	1.15	176	95.8	48.701	230/460	
		1200	445/7T	15012ET3G447T-W22	$20,639	N1	2472	1.15	176	95.8	48.701	460	
		1200	445/7T	15012ET3GRB447T-W22	$20,639	N1	2371	1.15	176	95.8	48.701	460	14
		1200	445/7T	15012ET3H447T-W22	$20,639	N1	2467	1.15	141	95.8	48.701	575	
		900	447/9T	15009ET3G449T-W22	$30,677	N1	3079	1.15	185	94.5	56.338	460	

continued on next page

Please refer to back cover for description of "NOTES"

For detailed specifications, data sheets, drawings and performance curves visit http://www.weg.net

TEFC - Foot Mount - *continued*

HP	kW	RPM	Frame	Catalog Number	List Price	Mult. Symbol	Approx. Shipping Weight (lbs)	Service Factor	FL Amps @ High	FL. Eff (%)	"C" Dimension (in)	Voltage (V)	Notes
200	150	3600	445/7TS	20036ET3E447TS-W22	$23,562	N1	2224	1.15	219	95.4	44.951	230/460	
		3600	445/7TS	20036ET3G447TS-W22	$23,562	N1	2046	1.15	219	95.4	44.951	460	
		3600	504/5S	20036ET3G504S-W22	$23,562	N1	2373	1.15	222	95.4	48.215	460	
		1800	445/7TS	20018ET3G447TS-W22	$21,098	N1	2138	1.15	230	96.2	44.951	460	
		1800	445/7T	20018ET3E447T-W22	$21,098	N1	2349	1.15	230	96.2	48.701	230/460	
		1800	445/7T	20018ET3G447T-W22	$21,098	N1	2224	1.15	230	96.2	48.701	460	
		1800	445/7T	20018ET3GRB447T-W22	$21,098	N1	2209	1.15	230	96.2	48.701	460	14
		1800	445/7T	20018ET3H447T-W22	$21,098	N1	2477	1.15	184	96.2	48.701	575	
		1800	445/7T	20018ET3HRB447T-W22	$21,098	N1	1850	1.15	184	96.2	48.701	575	14
		1800	504/5	20018ET3G504-W22	$21,098	N1	2621	1.15	228	96.2	54.095	460	
		1200	445/7T	20012ET3G447T-W22	$25,133	N1	2406	1.15	237	95.8	48.701	460	
		1200	445/7T	20012ET3GRB447T-W22	$25,133	N1	2588	1.15	237	95.8	48.701	460	14
		1200	447/9T	20012ET3E449T-W22	$25,255	N1	2495	1.15	237	95.8	56.338	230/460	
		1200	447/9T	20012ET3G449T-W22	$25,255	N1	3044	1.15	237	95.8	56.338	460	
		1200	447/9T	20012ET3GRB449T-W22	$25,255	N1	2940	1.15	237	95.8	56.338	460	14
		1200	447/9T	20012ET3H449T-W22	$25,255	N1	2933	1.15	190	95.8	56.338	575	
		1200	504/5	20012ET3G505-W22	$25,255	N1	2467	1.15	237	95.8	54.095	460	
		900	447/9T	20009ET3G449T-W22	$49,899	N1	3255	1.15	254	95.0	56.338	460	
250	185	3600	445/7TS	25036ET3G447TS-W22	$29,846	N1	2535	1.15	266	95.8	44.951	460	
		3600	447/9TS	25036ET3G449TS-W22	$33,173	N1	2730	1.15	266	95.8	52.588	460	
		1800	445/7TS	25018ET3G447TS-W22	$27,189	N1	2709	1.15	281	96.2	44.951	460	
		1800	445/7TS	25018ET3H447TS-W22	$27,189	N1	2896	1.15	225	96.2	44.951	575	
		1800	445/7T	25018ET3G447T-W22	$26,716	N1	2446	1.15	281	96.2	48.701	460	
		1800	445/7T	25018ET3GRB447T-W22	$26,716	N1	2554	1.15	281	96.2	48.701	460	14
		1800	445/7T	25018ET3HRB447T-W22	$26,716	N1	2414	1.15	225	96.2	48.701	575	14
		1800	447/9T	25018ET3G449T-W22	$26,803	N1	2879	1.15	281	96.2	56.338	460	
		1800	447/9T	25018ET3GRB449T-W22	$26,803	N1	2815	1.15	281	96.2	56.338	460	14
		1200	447/9T	25012ET3E449T-W22	$35,555	N1	3217	1.15	292	95.8	56.338	230/460	
		1200	447/9T	25012ET3G449T-W22	$35,555	N1	3090	1.15	292	95.8	56.338	460	
		1200	447/9T	25012ET3GRB449T-W22	$35,555	N1	3224	1.15	292	95.8	56.338	460	14
		1200	447/9T	25012ET3H449T-W22	$35,555	N1	3206	1.15	234	95.8	56.338	575	
		1200	586/7	25012ET3G586/7-W22	$39,631	N1	3769	1.15	299	95.8	61.902	460	43
		900	L447/9T	25009ET3G449T-W22	$56,168	N1	3590	1.15	308	95.4	57.181	460	43
300	220	3600	447/9TS	30036ET3G449TS-W22	$38,269	N1	2987	1.15	320	95.8	52.588	460	
		1800	447/9TS	30018ET3G449TS-W22	$31,384	N1	2894	1.15	330	96.2	52.588	460	44
		1800	447/9T	30018ET3G449T-W22	$31,384	N1	2888	1.15	330	96.2	56.338	460	
		1800	447/9T	30018ET3GRB449T-W22	$31,384	N1	2992	1.15	330	96.2	56.338	460	14
		1200	447/9T	30012ET3G449T-W22	$38,437	N1	3178	1.15	356	95.8	56.338	460	37
		1200	586/7	30012ET3G586/7-W22	$44,301	N1	4061	1.15	356	95.8	61.902	460	43
		900	L447/9T	30009ET3G449T-W22	$58,655	N1	3826	1.15	371	95.4	57.181	460	19;43

continued on next page

Please refer to back cover for description of "NOTES"

For detailed specifications, data sheets, drawings and performance curves visit http://www.weg.net

Data subject to change without notice.

TEFC - Foot Mount - *continued*

HP	kW	RPM	Frame	Catalog Number	List Price	Mult. Symbol	Approx. Shipping Weight (lbs)	Service Factor	FL Amps @ High	FL. Eff (%)	"C" Dimension (in)	Voltage (V)	Notes
350	260	3600	447/9TS	35036ET3G449TS-W22	$43,805	N1	3120	1.15	377	96.2	52.588	460	
		1800	447/9TS	35018ET3G449TS-W22	$36,517	N1	3123	1.15	394	96.2	52.588	460	44
		1800	447/9T	35018ET3G449T-W22	$36,517	N1	3168	1.15	394	96.2	56.338	460	
		1800	447/9T	35018ET3GRB449T-W22	$36,517	N1	2941	1.15	394	96.2	56.338	460	14
		1200	L447/9T	35012ET3G449T-W22	$47,633	N1	3781	1.15	415	95.8	57.181	460	37;43
		1200	L447/9T	35012ET3GRB449T-W22	$47,633	N1	3800	1.15	415	95.8	57.181	460	14;19;37;43
		900	586/7	35009ET3G586/7-W22	$64,873	N1	5028	1.00	426	95.8	61.902	460	1;43
400	300	3600	L447/9TS	40036ET3G449TS-W22	$44,605	N1	3361	1.15	432	95.8	53.431	460	43
		1800	L447/9TS	40018ET3G449TS-W22	$43,805	N1	3328	1.15	445	96.2	53.431	460	43
		1800	L447/9T	40018ET3G449T-W22	$43,805	N1	3416	1.15	445	96.2	57.181	460	43
		1800	L447/9T	40018ET3GRB449T-W22	$43,805	N1	3404	1.15	445	96.2	57.181	460	14;43
		1800	L447/9T	40018ET3H449T-W22	$43,805	N1	3400	1.15	356	96.2	57.181	575	43
		1200	L447/9T	40012ET3G449T-W22	$52,307	N1	3720	1.15	477	95.8	57.181	460	19;37;43
		1200	L447/9T	40012ET3GRB449T-W22	$52,307	N1	3827	1.15	477	95.8	57.181	460	14;19;37;43
		1200	586/7	40012ET3G586/7-W22	$56,201	N1	4663	1.15	483	96.2	61.902	460	43
		900	588/9	40009ET3G588/9-W22	$66,123	N1	3308	1.00	498	95.7	69.381	460	1;43
450	330	3600	L447/9TS	45036ET3G449TS-W22	$49,610	N1	3537	1.00	475	95.8	53.431	460	1;43
		1800	L447/9T	45018ET3G449T-W22	$48,010	N1	3681	1.15	501	96.2	57.181	460	43
		1800	L447/9T	45018ET3GRB449T-W22	$48,010	N1	3657	1.15	501	96.2	57.181	460	14;43
		1200	586/7	45012ET3G586/7-W22	$62,251	N1	4957	1.00	532	96.2	61.902	460	1;43
		1200	586/7	45012ET3GRB586/7-W22	$62,251	N1	5248	1.00	532	96.2	61.902	460	1;14;43
		900	588/9	45009ET3G588/9-W22	$68,715	N1	5915	1.00	534	95.8	69.381	460	1;43;44
500	370	3600	586/7S	50036ET3G586/7S-W22	$56,305	N1	4649	1.15	530	96.2	55.027	460	43;44
		1800	L447/9T	50018ET3G449T-W22	$50,594	N1	3889	1.00	561	96.2	57.181	460	1;43;44
		1800	L447/9T	50018ET3GRB449T-W22	$50,594	N1	5424	1.00	561	96.2	57.181	460	14;19;43
		1200	586/7	50012ET3G586/7-W22	$62,962	N1	4916	1.00	603	96.2	61.902	460	1;43;44
600	450	3600	588/9S	60036ET3G588/9S-W22	$64,635	N1	5142	1.00	650	96.5	62.506	460	1;43;44
		1800	586/7	60018ET3G586/7-W22	$60,316	N1	4963	1.00	665	96.5	61.902	460	1;43;44
		1200	588/9	60012ET3G588/9-W22	$71,374	N1	6168	1.00	743	96.2	69.381	460	1;43;44
650	480	3600	588/9S	65036ET3G588/9S-W22	$66,835	N1	4805	1.00	685	96.6	62.506	460	1;43;44
		1800	588/9	65018ET3G588/9-W22	$66,701	N1	5597	1.00	734	96.6	69.381	460	1;43;44
700	515	3600	588/9S	70036ET3G588/9S-W22	$71,254	N1	5680	1.00	736	96.6	62.506	460	1;19;43;44
		1800	588/9	70018ET3G588/9-W22	$71,185	N1	5940	1.00	788	96.6	69.381	460	1;43;44
750	550	1800	588/9	75018ET3G588/9-W22	$74,025	N1	3308	1.00	840	96.7	69.381	460	1;43;44

Please refer to back cover for description of "NOTES"

For detailed specifications, data sheets, drawings and performance curves visit http://www.weg.net

TEFC - C-Face - Foot Mount

HP	kW	RPM	Frame	Catalog Number	List Price	Mult. Symbol	Approx. Shipping Weight (lbs)	Service Factor	FL Amps @ High	FL. Eff (%)	"C" Dimension (in)	Voltage (V)	Notes
0.25	0.18	3600	56C	.2536ES3E56C-S	$258	F1	21	1.15	0.50	57.5	11.142	208-230/460	9
		1800	56C	.2518ES3E56C-S	$270	F1	23	1.15	0.50	70.0	11.142	208-230/460	9
		1800	56C	.2518ES3H56C-S	$270	F1	23	1.15	0.40	70.0	11.142	575	9
0.33	0.25	3600	56C	.3336ES3E56C-S	$270	F1	22	1.15	0.60	62.0	11.142	208-230/460	9
		3600	56C	.3336ES3H56C-S	$270	F1	22	1.15	0.50	62.0	11.142	575	9
		1800	56C	.3318ES3E56C-S	$274	F1	24	1.15	0.60	74.0	11.535	208-230/460	9
0.5	0.37	3600	56C	.5036ES3H56C-S	$281	F1	24	1.15	0.70	68.0	11.535	575	9
		1800	56C	.5018ES3E56C-S	$311	F1	26	1.15	0.90	77.0	11.535	208-230/460	9
		1800	56C	.5018ES3H56C-S	$263	F1	26	1.15	0.70	77.0	11.535	575	9
		1200	56C	.5012ES3E56C-S	$440	F1	31	1.15	1.00	72.0	12.323	208-230/460	9
0.75	0.55	3600	56C	.7536ES3E56C-S	$311	F1	25	1.15	1.10	72.0	11.535	208-230/460	9
		3600	56C	.7536ES3H56C-S	$310	F1	25	1.15	0.90	72.0	11.535	575	9
		1800	56C	.7518ES3E56C-S	$332	F1	28	1.15	1.20	78.5	11.929	208-230/460	9
		1800	56C	.7518ES3H56C-S	$333	F1	28	1.15	1.00	78.5	11.929	575	9
		1200	56HC	.7512ES3E56C-S	$449	F1	34	1.15	1.30	75.5	12.716	208-230/460	9
1	0.75	3600	W56C	00136ET3EW56C-S	$420	F1	25	1.15	1.50	78.5	11.106	230/460	9
		3600	W56C	00136ET3HW56C-S	$420	F1	25	1.15	1.20	78.5	11.106	575	9
		3600	143/5TC	00136ET3E143TC-W22	$566	N1	47	1.25	1.44	81.5	13.358	230/460	
		1800	56C	00118ET3E56C-S	$407	F1	41	1.15	1.50	85.5	13.504	230/460	9
		1800	56C	00118ET3H56C-S	$407	F1	41	1.15	1.20	85.5	13.504	575	9
		1800	143/5TC	00118ET3E143TC-S	$484	RSP	42	1.15	1.50	85.5	13.583	230/460	9
		1800	143/5TC	00118ET3H143TC-S	$484	RSP	42	1.15	1.20	85.5	13.583	575	9
		1800	143/5TC	00118ET3E143TC-W22	$555	N1	50	1.25	1.47	85.5	13.358	230/460	
		1800	143/5TC	00118ET3H143TC-W22	$555	N1	50	1.25	1.18	85.5	13.358	575	
		1200	56HC	00112ET3E56C-S	$525	F1	42	1.15	1.60	82.5	13.504	230/460	9
		1200	143/5TC	00112ET3E145TC-S	$554	RSP	43	1.15	1.60	82.5	13.583	230/460	9
		1200	143/5TC	00112ET3E145TC-W22	$636	N1	57	1.25	1.73	82.5	13.358	230/460	
1.5	1.1	3600	56C	00156ET3E56C-S	$461	F1	37	1.15	1.90	84.0	13.109	230/460	9
		3600	56C	00156ET3H56C-S	$461	F1	37	1.15	1.50	84.0	13.109	575	9
		3600	143/5TC	00156ET3E143TC-S	$497	RSP	39	1.15	1.90	84.0	13.189	230/460	9
		3600	143/5TC	00156ET3E143TC-W22	$571	N1	52	1.25	1.96	84.0	13.358	230/460	
		3600	143/5TC	00156ET3H143TC-W22	$571	N1	51	1.25	1.57	84.0	13.358	575	
		1800	56HC	00158ET3E56C-S	$463	F1	44	1.15	2.00	86.5	13.504	230/460	9
		1800	56HC	00158ET3H56C-S	$463	F1	44	1.15	1.60	86.5	13.504	575	9
		1800	143/5TC	00158ET3E145TC-S	$504	RSP	43	1.15	2.00	86.5	13.583	230/460	9
		1800	143/5TC	00158ET3H145TC-S	$504	RSP	43	1.15	1.60	86.5	13.583	575	9
		1800	143/5TC	00158ET3E145TC-W22	$579	N1	56	1.25	2.02	86.5	13.358	230/460	
		1800	143/5TC	00158ET3H145TC-W22	$579	N1	56	1.25	1.62	86.5	13.358	575	
		1200	182/4TC	00152ET3E182TC-S	$690	RSP	85	1.15	2.20	87.5	16.339	230/460	9
		1200	182/4TC	00152ET3E182TC-W22	$792	N1	101	1.25	2.54	87.5	15.860	230/460	

continued on next page

Please refer to back cover for description of "NOTES"

For detailed specifications, data sheets, drawings and performance curves visit http://www.weg.net

Data subject to change without notice.

TEFC - C-Face - Foot Mount - *continued*

HP	kW	RPM	Frame	Catalog Number	List Price	Mult. Symbol	Approx. Shipping Weight (lbs)	Service Factor	FL Amps @ High	FL. Eff (%)	"C" Dimension (in)	Voltage (V)	Notes
2	1.5	3600	56HC	00236ET3E56C-S	$517	F1	44	1.15	2.50	85.5	13.898	230/460	9
		3600	56HC	00236ET3H56C-S	$517	F1	44	1.15	2.00	85.5	13.898	575	9
		3600	143/5TC	00236ET3H145TC-S	$539	RSP	45	1.15	2.00	85.5	13.976	575	9
		3600	143/5TC	00236ET3E145TC-W22	$619	N1	56	1.25	2.56	85.5	13.358	230/460	
		3600	143/5TC	00236ET3H145TC-W22	$619	N1	56	1.25	2.05	85.5	13.358	575	
		1800	56HC	00218ET3E56C-S	$506	F1	46	1.15	2.70	86.5	13.898	230/460	9
		1800	143/5TC	00218ET3E145TC-S	$558	RSP	47	1.15	2.70	86.5	13.976	230/460	9
		1800	143/5TC	00218ET3H145TC-S	$558	RSP	47	1.15	2.20	86.5	13.976	575	9
		1800	143/5TC	00218ET3E145TC-W22	$640	N1	53	1.25	2.76	86.5	13.358	230/460	
		1800	143/5TC	00218ET3H145TC-W22	$640	N1	57	1.25	2.21	86.5	13.358	575	
		1200	182/4TC	00212ET3E184TC-S	$747	RSP	96	1.15	3.00	88.5	17.126	230/460	9
		1200	182/4TC	00212ET3E184TC-W22	$857	N1	112	1.25	3.22	88.5	15.860	230/460	39
3	2.2	3600	56HC	00336ET3E56C-S	$606	F1	54	1.15	3.50	86.5	15.079	230/460	9
		3600	56HC	00336ET3H56C-S	$606	F1	54	1.15	2.80	86.5	15.079	575	9
		3600	143/5TC	00336ET3E145TC-S	$674	RSP	54	1.15	3.50	86.5	15.157	230/460	9
		3600	182/4TC	00336ET3E182TC-S	$698	RSP	73	1.15	3.70	86.5	16.339	230/460	9
		3600	182/4TC	00336ET3H182TC-S	$698	RSP	73	1.15	3.00	86.5	16.339	575	9
		3600	182/4TC	00336ET3E182TC-W22	$802	N1	103	1.25	3.63	86.5	15.860	230/460	
		3600	182/4TC	00336ET3H182TC-W22	$802	N1	103	1.25	2.90	86.5	15.860	575	
		1800	182/4TC	00318ET3E182TC-S	$610	RSP	100	1.15	3.80	89.5	17.913	230/460	9
		1800	182/4TC	00318ET3H182TC-S	$610	RSP	100	1.15	3.00	89.5	17.913	575	9
		1800	182/4TC	00318ET3E182TC-W22	$700	N1	96	1.25	3.91	89.5	15.860	230/460	
		1800	182/4TC	00318ET3H182TC-W22	$700	N1	98	1.25	3.13	89.5	15.860	575	
		1200	213/5TC	00312ET3E213TC-W22	$1,180	N1	166	1.25	4.41	89.5	19.517	230/460	
		900	213/5TC	00309ET3E215TC-W22	$2,166	N1	192	1.25	4.55	85.5	19.517	230/460	
5	3.7	3600	182/4TC	00536ET3H184TC-S	$793	RSP	98	1.15	4.70	88.5	17.913	575	9
		3600	182/4TC	00536ET3E184TC-W22	$911	N1	110	1.25	5.90	88.5	15.860	230/460	
		3600	182/4TC	00536ET3H184TC-W22	$911	N1	109	1.25	4.72	88.5	15.860	575	
		1800	182/4TC	00518ET3E184TC-S	$876	RSP	81	1.15	6.50	89.5	17.913	230/460	9
		1800	182/4TC	00518ET3H184TC-S	$706	RSP	93	1.15	5.20	89.5	17.913	575	9
		1800	182/4TC	00518ET3E184TC-W22	$810	N1	107	1.25	6.45	89.5	15.860	230/460	
		1800	182/4TC	00518ET3H184TC-W22	$810	N1	108	1.25	5.16	89.5	15.860	575	
		1200	213/5TC	00512ET3E215TC-W22	$1,384	N1	183	1.25	6.83	89.5	19.517	230/460	
7.5	5.5	3600	182/4TC	00736ET3E184TC-S	$985	RSP	101	1.15	8.60	89.5	17.126	230/460	9
		3600	213/5TC	00736ET3H213TC-S	$1,025	RSP	153	1.15	7.00	89.5	20.079	575	9
		3600	182/4TC	00736ET3E184TC-W22	$1,112	N1	110	1.25	8.76	89.5	15.860	230/460	
		3600	182/4TC	00736ET3H184TC-W22	$1,112	N1	109	1.25	7.01	89.5	15.860	575	
		3600	213/5TC	00736ET3E213TC-W22	$1,177	N1	166	1.25	8.76	89.5	19.517	230/460	
		3600	213/5TC	00736ET3H213TC-W22	$1,177	N1	166	1.25	7.01	89.5	19.517	575	
		1800	213/5TC	00718ET3E213TC-W22	$1,141	N1	174	1.25	9.18	91.7	19.517	230/460	
		1800	213/5TC	00718ET3H213TC-W22	$1,141	N1	178	1.25	7.34	91.7	19.517	575	
		1200	254/6TC	00712ET3E254TC-W22	$2,134	N1	321	1.25	9.48	91.0	24.945	230/460	
		900	254/6TC	00709ET3E256TC-W22	$3,726	N1	341	1.25	11.1	87.5	24.945	230/460	

continued on next page

Please refer to back cover for description of "NOTES"

For detailed specifications, data sheets, drawings and performance curves visit http://www.weg.net

TEFC - C-Face - Foot Mount - *continued*

HP	kW	RPM	Frame	Catalog Number	List Price	Mult. Symbol	Approx. Shipping Weight (lbs)	Service Factor	FL Amps @ High	FL. Eff (%)	"C" Dimension (in)	Voltage (V)	Notes
10	7.5	3600	213/5TC	01036ET3H215TC-S	$1,205	RSP	178	1.15	9.20	90.2	21.654	575	9
		3600	213/5TC	01036ET3E215TC-W22	$1,383	N1	178	1.25	11.6	90.2	19.517	230/460	
		3600	213/5TC	01036ET3H215TC-W22	$1,383	N1	183	1.25	9.28	90.2	19.517	575	
		1800	213/5TC	01018ET3E215TC-S	$1,354	RSP	151	1.15	12.2	91.7	19.291	230/460	9
		1800	213/5TC	01018ET3H215TC-S	$1,154	RSP	151	1.15	9.80	91.7	19.291	575	9
		1800	213/5TC	01018ET3E215TC-W22	$1,325	N1	183	1.25	12.4	91.7	19.517	230/460	
		1800	213/5TC	01018ET3H215TC-W22	$1,325	N1	191	1.25	9.92	91.7	19.517	575	
		1200	254/6TC	01012ET3E256TC-W22	$2,465	N1	329	1.25	12.9	91.0	24.945	230/460	
15	11	3600	213/5TC	01536ET3E215TC-W22	$1,748	N1	187	1.25	17.0	91.0	19.517	230/460	
		3600	254/6TC	01536ET3H254TC-S	$1,649	RSP	216	1.15	13.9	91.0	22.559	575	9
		3600	254/6TC	01536ET3E254TC-W22	$1,893	N1	295	1.25	17.2	91.0	24.945	230/460	
		3600	254/6TC	01536ET3H254TC-W22	$1,893	N1	302	1.25	13.8	91.0	24.945	575	
		1800	254/6TC	01518ET3H254TC-S	$1,670	RSP	248	1.15	14.6	92.4	22.559	575	9
		1800	254/6TC	01518ET3E254TC-W22	$1,917	N1	340	1.25	18.0	92.4	24.945	230/460	
		1800	254/6TC	01518ET3H254TC-W22	$1,917	N1	351	1.25	14.4	92.4	24.945	575	
		1200	284/6TC	01512ET3E284TC-W22	$3,388	N1	430	1.25	17.9	91.7	27.929	230/460	
		1200	284/6TC	01512ET3H284TC-W22	$3,388	N1	428	1.25	14.3	91.7	27.929	575	
20	15	3600	254/6TC	02036ET3H256TC-S	$2,136	RSP	256	1.15	18.2	91.0	23.346	575	9
		3600	254/6TC	02036ET3E256TC-W22	$2,451	N1	318	1.25	23.2	91.0	24.945	230/460	
		3600	254/6TC	02036ET3H256TC-W22	$2,451	N1	327	1.25	18.6	91.0	24.945	575	
		1800	254/6TC	02018ET3H256TC-S	$1,978	RSP	279	1.15	19.8	93.0	23.346	575	9
		1800	254/6TC	02018ET3E256TC-W22	$2,270	N1	389	1.25	24.1	93.0	24.945	230/460	
		1800	254/6TC	02018ET3H256TC-W22	$2,270	N1	401	1.25	19.3	93.0	24.945	575	
		1200	284/6TC	02012ET3E286TC-W22	$4,060	N1	457	1.25	24.2	91.7	27.929	230/460	
25	18.5	3600	284/6TSC	02536ET3E284TSC-W22	$3,096	N1	416	1.25	28.5	91.7	26.557	230/460	
		3600	284/6TSC	02536ET3H284TSC-W22	$3,096	N1	413	1.25	22.8	91.7	26.557	575	
		1800	284/6TC	02518ET3E284TC-W22	$2,840	N1	418	1.25	29.5	93.6	27.929	230/460	
		1800	284/6TC	02518ET3H284TC-W22	$2,840	N1	447	1.25	23.6	93.6	27.929	575	
		1200	324/6TC	02512ET3E324TC-W22	$4,858	N1	601	1.25	30.4	93.0	31.116	230/460	
30	22	3600	284/6TSC	03036ET3E286TSC-W22	$3,659	N1	433	1.25	33.8	91.7	26.557	230/460	
		3600	284/6TSC	03036ET3H286TSC-W22	$3,659	N1	433	1.25	27.0	91.7	26.557	575	
		1800	284/6TC	03018ET3E286TC-W22	$3,321	N1	466	1.25	35.1	93.6	27.929	230/460	
		1800	284/6TC	03018ET3H286TC-W22	$3,321	N1	484	1.25	28.1	93.6	27.929	575	
		1200	324/6TC	03012ET3E326TC-W22	$5,394	N1	645	1.25	36.2	93.0	31.116	230/460	
40	30	3600	324/6TSC	04036ET3E324TSC-W22	$4,845	N1	606	1.25	45.8	92.4	29.616	230/460	
		3600	324/6TSC	04036ET3H324TSC-W22	$4,845	N1	605	1.25	36.6	92.4	29.616	575	
		1800	324/6TSC	04018ET3E324TSC-W22	$4,300	N1	629	1.25	47.1	94.1	29.616	230/460	
		1800	324/6TC	04018ET3E324TC-W22	$4,300	N1	606	1.25	47.1	94.1	31.116	230/460	
		1800	324/6TC	04018ET3H324TC-W22	$4,300	N1	630	1.25	37.7	94.1	31.116	575	
		1200	364/5TC	04012ET3E364TC-W22	$7,576	N1	1032	1.25	46.5	94.1	34.251	230/460	
50	37	3600	324/6TSC	05036ET3E326TSC-W22	$5,437	N1	628	1.25	56.1	93.0	29.616	230/460	
		1800	324/6TSC	05018ET3E326TSC-W22	$5,221	N1	614	1.25	59.2	94.5	29.616	230/460	
		1800	324/6TC	05018ET3E326TC-W22	$5,221	N1	625	1.25	59.2	94.5	31.116	230/460	
		1800	324/6TC	05018ET3H326TC-W22	$5,221	N1	651	1.25	47.4	94.5	31.116	575	
		1200	364/5TC	05012ET3E365TC-W22	$8,960	N1	1048	1.25	57.4	94.1	34.251	230/460	

continued on next page

Please refer to back cover for description of "NOTES"

For detailed specifications, data sheets, drawings and performance curves visit http://www.weg.net

Data subject to change without notice.

TEFC - C-Face - Foot Mount - *continued*

HP	kW	RPM	Frame	Catalog Number	List Price	Mult. Symbol	Approx. Shipping Weight (lbs)	Service Factor	FL Amps @ High	FL. Eff (%)	"C" Dimension (in)	Voltage (V)	Notes
60	45	3600	364/5TSC	06036ET3E364TSC-W22	$7,994	N1	990	1.25	67.0	93.6	32.338	230/460	
		3600	364/5TSC	06036ET3H364TSC-W22	$7,994	N1	992	1.25	53.6	93.6	32.338	575	
		1800	364/5TC	06018ET3E364TC-W22	$7,831	N1	961	1.25	68.3	95.0	34.251	230/460	
		1800	364/5TC	06018ET3H364TC-W22	$7,831	N1	1060	1.25	54.6	95.0	34.251	575	
75	55	3600	364/5TSC	07536ET3E365TSC-W22	$9,533	N1	993	1.25	81.9	93.6	32.338	230/460	
		1800	364/5TC	07518ET3E365TC-W22	$9,148	N1	1024	1.25	84.1	95.4	34.251	230/460	
		1800	364/5TC	07518ET3H365TC-W22	$9,148	N1	1075	1.25	67.3	95.4	34.251	575	
		1200	404/5TC	07512ET3H405TC-W22	$12,549	N1	1337	1.25	67.9	94.5	39.730	575	
100	75	1800	404/5TSC	10018ET3E405TSC-W22	$12,179	N1	1256	1.25	111	95.4	36.732	230/460	
		1800	404/5TC	10018ET3E405TC-W22	$12,179	N1	1256	1.25	111	95.4	39.730	230/460	
		1800	404/5TC	10018ET3H405TC-W22	$12,179	N1	1318	1.25	88.8	95.4	39.730	575	
125	90	1800	444/5TSC	12518ET3G444TSC-W22	$16,218	N1	1759	1.15	139	95.4	41.407	460	
		1800	444/5TC	12518ET3E444TC-W22	$16,218	N1	1887	1.15	139	95.4	45.157	230/460	
		1800	444/5TC	12518ET3G444TC-W22	$16,218	N1	1851	1.15	139	95.4	45.157	460	
		1800	444/5TC	12518ET3H444TC-W22	$16,218	N1	1851	1.15	111	95.4	45.157	575	
150	110	1800	444/5TC	15018ET3E445TC-W22	$18,025	N1	1919	1.15	170	95.8	45.157	230/460	
		1800	444/5TC	15018ET3G445TC-W22	$18,025	N1	1997	1.15	170	95.8	45.157	460	
200	150	1800	445/7TC	20018ET3G447TC-W22	$21,704	N1	2523	1.15	230	96.2	48.701	460	
250	185	1800	445/7TSC	25018ET3G447TSC-W22	$34,280	N1	2361	1.15	281	96.2	44.951	460	
300	220	1800	447/9TC	30018ET3G449TC-W22	$31,990	N1	3069	1.15	330	96.2	56.338	460	

Please refer to back cover for description of "NOTES"

For detailed specifications, data sheets, drawings and performance curves visit http://www.weg.net

TEFC - C-Face - Footless

HP	kW	RPM	Frame	Catalog Number	List Price	Mult. Symbol	Approx. Shipping Weight (lbs)	Service Factor	FL Amps @ High	FL. Eff (%)	"C" Dimension (in)	Voltage (V)	Notes
0.33	0.25	3600	56C	.3336ES3E56CFL-S	$270	F1	22	1.15	0.60	62.0	11.142	208-230/460	9;20
		3600	56C	.3336ES3H56CFL-S	$270	F1	22	1.15	0.50	62.0	11.142	575	9;20
		1800	56C	.3318ES3E56CFL-S	$274	F1	24	1.15	0.60	74.0	11.535	208-230/460	9;20
0.5	0.37	1800	56C	.5018ES3E56CFL-S	$311	F1	26	1.15	0.90	77.0	11.535	208-230/460	9;20
		1800	56C	.5018ES3H56CFL-S	$281	F1	26	1.15	0.70	77.0	11.535	575	9;20
0.75	0.55	3600	56C	.7536ES3E56CFL-S	$311	F1	25	1.15	1.10	72.0	11.535	208-230/460	9;20
		3600	56C	.7536ES3H56CFL-S	$310	F1	25	1.15	0.90	72.0	11.535	575	9;20
		1800	56C	.7518ES3E56CFL-S	$332	F1	28	1.15	1.20	78.5	11.929	208-230/460	9;20
		1800	56C	.7518ES3H56CFL-S	$333	F1	28	1.15	1.00	78.5	11.929	575	9;20
		1200	56C	.7512ES3E56CFL-S	$449	F1	34	1.15	1.30	75.5	12.716	208-230/460	9;20
		1200	56C	.7512ES3H56CFL-S	$448	F1	34	1.15	1.10	75.5	12.716	575	9;20
1	0.75	3600	W56C	00136ET3EW56CFL-S	$420	F1	25	1.15	1.50	78.5	11.106	230/460	9;20
		3600	143TC	00136ET3ER143TC-W22	$577	N1	44	1.25	1.44	81.5	13.065	230/460	15
		1800	56C	00118ET3E56CFL-S	$407	F1	41	1.15	1.50	85.5	13.504	230/460	9;20
		1800	56C	00118ET3H56CFL-S	$407	F1	41	1.15	1.20	85.5	13.504	575	9;20
		1800	143/5TC	00118ET3ER143TC-S	$484	RSP	42	1.15	1.50	85.5	13.583	230/460	9;15
		1800	143TC	00118ET3ER143TC-W22	$572	N1	47	1.25	1.47	85.5	13.065	230/460	15
		1200	56C	00112ET3E56CFL-S	$528	F1	42	1.15	1.60	82.5	13.504	230/460	9;20
		1200	56C	00112ET3H56CFL-S	$528	F1	42	1.15	1.30	82.5	13.504	575	9;20
		1200	143/5TC	00112ET3ER145TC-S	$554	RSP	43	1.15	1.60	82.5	13.583	230/460	9;15
		1200	145TC	00112ET3ER145TC-W22	$655	N1	56	1.25	1.73	82.5	16.197	230/460	15
1.5	1.1	3600	56C	00156ET3E56CFL-S	$461	F1	37	1.15	1.90	84.0	13.109	230/460	9;20
		3600	143/5TC	00156ET3ER143TC-S	$497	RSP	39	1.15	1.90	84.0	13.189	230/460	9;15
		3600	143TC	00156ET3ER143TC-W22	$588	N1	48	1.25	1.96	84.0	13.065	230/460	15
		1800	56C	00158ET3E56CFL-S	$463	F1	44	1.15	2.00	86.5	13.504	230/460	9;20
		1800	143/5TC	00158ET3ER145TC-S	$504	RSP	43	1.15	2.00	86.5	13.583	230/460	9;15
		1800	145TC	00158ET3ER145TC-W22	$596	N1	55	1.25	2.02	86.5	14.077	230/460	15
		1200	182/4TC	00152ET3ER182TC-S	$690	RSP	90	1.15	2.20	87.5	16.339	230/460	9;15
		1200	182TC	00152ET3ER182TC-W22	$816	N1	100	1.25	2.54	87.5	16.197	230/460	15;39
2	1.5	3600	56C	00236ET3E56CFL-S	$517	F1	44	1.15	2.50	85.5	13.898	230/460	9;20
		3600	143/5TC	00236ET3ER145TC-S	$539	RSP	45	1.15	2.50	85.5	13.976	230/460	9;15
		3600	145TC	00236ET3ER145TC-W22	$638	N1	55	1.25	2.56	85.5	14.077	230/460	15
		1800	56C	00218ET3E56CFL-S	$506	F1	46	1.15	2.70	86.5	13.898	230/460	9;20
		1800	143/5TC	00218ET3ER145TC-S	$558	RSP	47	1.15	2.70	86.5	13.976	230/460	9;15
		1800	145TC	00218ET3ER145TC-W22	$659	N1	56	1.25	2.76	86.5	14.077	230/460	15
		1200	182/4TC	00212ET3ER184TC-S	$747	RSP	98	1.15	3.00	88.5	17.126	230/460	9;15
		1200	184TC	00212ET3ER184TC-W22	$883	N1	110	1.25	3.22	88.5	17.197	230/460	15;39

continued on next page

Refer to electrical and mechanical data sections for additional technical information. Please refer to back cover for description of "NOTES"

For detailed specifications, data sheets, drawings and performance curves visit http://www.weg.net

Data subject to change without notice.

TEFC - C-Face - Footless - *continued*

HP	kW	RPM	Frame	Catalog Number	List Price	Mult. Symbol	Approx. Shipping Weight (lbs)	Service Factor	FL Amps @ High	FL. Eff (%)	"C" Dimension (in)	Voltage (V)	Notes
3	2.2	3600	56C	00336ET3E56CFL-S	$606	F1	54	1.15	3.50	86.5	15.079	230/460	9;20
		3600	56C	00336ET3H56CFL-S	$606	F1	54	1.15	2.80	86.5	15.079	575	9;20
		3600	145TC	00336ET3ER145TC-W22	$677	N1	58	1.25	3.71	86.5	14.077	230/460	15
		3600	182/4TC	00336ET3ER182TC-S	$698	RSP	73	1.15	3.70	86.5	16.339	230/460	9;15
		3600	182TC	00336ET3ER182TC-W22	$826	N1	108	1.25	3.63	86.5	16.197	230/460	15;39
		1800	182/4TC	00318ET3ER182TC-S	$610	RSP	100	1.15	3.80	89.5	17.913	230/460	9;15
		1800	182TC	00318ET3ER182TC-W22	$721	N1	104	1.25	3.91	89.5	16.197	230/460	15;39
		1200	213/5TC	00312ET3ER213TC-S	$1,028	RSP	148	1.15	4.20	89.5	19.291	230/460	9;15
		1200	213TC	00312ET3ER213TC-W22	$1,203	N1	154	1.25	4.41	89.5	19.399	230/460	15
5	3.7	3600	182/4TC	00536ET3ER184TC-S	$793	RSP	98	1.15	5.90	88.5	17.913	230/460	9;15
		3600	184TC	00536ET3ER184TC-W22	$938	N1	115	1.25	5.90	88.5	17.197	230/460	15
		1800	182/4TC	00518ET3ER184TC-S	$706	RSP	93	1.15	6.50	89.5	17.913	230/460	9;15
		1800	184TC	00518ET3ER184TC-W22	$834	N1	113	1.25	6.45	89.5	17.197	230/460	15
		1200	213/5TC	00512ET3ER215TC-S	$1,206	RSP	162	1.15	6.70	89.5	20.079	230/460	9;15
		1200	215TC	00512ET3ER215TC-W22	$1,426	N1	178	1.25	6.83	89.5	20.895	230/460	15
7.5	5.5	3600	213/5TC	00736ET3ER213TC-S	$1,025	RSP	153	1.15	8.70	89.5	20.079	230/460	9;15
		3600	213TC	00736ET3ER213TC-W22	$1,212	N1	155	1.25	8.76	89.5	19.399	230/460	15
		1800	213/5TC	00718ET3ER213TC-S	$994	RSP	140	1.15	9.10	91.7	18.898	230/460	9;15
		1800	213TC	00718ET3ER213TC-W22	$1,175	N1	167	1.25	9.18	91.7	19.399	230/460	15
		1200	254/6TC	00712ET3ER254TC-S	$1,859	RSP	257	1.15	10.0	91.0	22.559	230/460	9;15
10	7.5	3600	213/5TC	01036ET3ER215TC-S	$1,205	RSP	178	1.15	11.5	90.2	21.654	230/460	9;15
		3600	215TC	01036ET3ER215TC-W22	$1,424	N1	179	1.25	11.6	90.2	20.895	230/460	15
		1800	213/5TC	01018ET3ER215TC-S	$1,154	RSP	151	1.15	12.2	91.7	19.291	230/460	9;15
		1800	215TC	01018ET3ER215TC-W22	$1,366	N1	187	1.25	12.4	91.7	20.895	230/460	15
		1800	213/5TC	01018ET3HR215TC-S	$1,154	RSP	151	1.15	9.80	91.7	19.291	575	9;15
		1200	254/6TC	01012ET3ER256TC-S	$2,148	RSP	286	1.15	13.8	91.0	23.346	230/460	9;15
15	11	3600	254/6TC	01536ET3ER254TC-S	$1,649	RSP	216	1.15	17.4	91.0	22.559	230/460	9;15
		3600	254TC	01536ET3ER254TC-W22	$1,950	N1	300	1.25	17.2	91.0	25.063	230/460	15
		1800	254/6TC	01518ET3ER254TC-S	$1,670	RSP	248	1.15	18.2	92.4	22.559	230/460	9;15
		1800	254TC	01518ET3ER254TC-W22	$1,975	N1	348	1.25	18.0	92.4	25.063	230/460	15
		1800	254/6TC	01518ET3HR254TC-S	$1,670	RSP	248	1.15	14.6	92.4	22.559	575	9;15
20	15	3600	254/6TC	02036ET3ER256TC-S	$2,136	RSP	256	1.15	22.7	91.0	23.346	230/460	9;15
		3600	256TC	02036ET3ER256TC-W22	$2,525	N1	335	1.25	23.2	91.0	26.795	230/460	15
		1800	254/6TC	02018ET3ER256TC-S	$1,978	RSP	279	1.15	24.7	93.0	23.346	230/460	9;15
		1800	256TC	02018ET3ER256TC-W22	$2,338	N1	407	1.25	24.1	93.0	26.795	230/460	15
25	18.5	3600	284TSC	02536ET3ER284TSC-W22	$3,187	N1	406	1.25	28.5	91.7	27.305	230/460	15
		1800	284TC	02518ET3ER284TC-W22	$2,925	N1	441	1.25	29.5	93.6	28.677	230/460	15
30	22	3600	286TSC	03036ET3ER286TSC-W22	$3,767	N1	436	1.25	33.8	91.7	28.801	230/460	15
		1800	286TC	03018ET3ER286TC-W22	$3,421	N1	489	1.25	35.1	93.6	30.173	230/460	15
		1200	326TSC	03012ET3ER326TSC-W22	$5,768	N1	732	1.25	36.2	93.0	32.254	230/460	15
40	30	3600	324TSC	04036ET3ER324TSC-W22	$4,988	N1	684	1.25	45.8	92.4	30.758	230/460	15
		1800	324TC	04018ET3ER324TC-W22	$4,429	N1	613	1.25	47.1	94.1	32.258	230/460	15
50	37	1800	326TC	05018ET3ER326TC-W22	$5,378	N1	648	1.25	59.2	94.5	33.754	230/460	15
60	45	1800	364/5TC	06018ET3ER364TC-W22	$8,053	N1	869	1.25	68.3	95.0	37.440	230/460	15
75	55	1800	364/5TC	07518ET3ER365TC-W22	$9,408	N1	1256	1.25	84.1	95.4	37.440	230/460	15

Refer to electrical and mechanical data sections for additional technical information. Please refer to back cover for description of "NOTES"

For detailed specifications, data sheets, drawings and performance curves visit http://www.weg.net

Three-Phase General Purpose Motors

ODP CAST IRON

WEG Open Drip Proof (ODP) motor is a general purpose line designed for environments where dirt and moisture are minimal. The ODP cast iron frame is designed to provide maximum ventilation and heat dissipation, offering low vibration levels, high mechanical stiffness and durability. Widely used in applications such as compressors, pumps and chillers, the ODP motor line meets or exceeds the efficiency levels determined by International Standards and the minimum efficiency level programs in force worldwide.

Standard Features

- Rated output: NEMA (60 Hz) - 15 to 2,500 HP
- Number of poles: 2 through 6
- Frame sizes NEMA 254T to L6808/09
- Frequency: 50 or 60 Hz
- Voltage: 208 to 4,160 V
- Degree of protection ODP (IP23) for frames 256T to L5810 WPI (IP24) for frame size L6808/09
- Efficiency levels: NEMA Premium® Efficiency (60Hz)
- Color: RAL 5009
- Cooling method: IC-01 according to DIN EN 60034-6
- Mounting: F-1
- Frame, end-shields and terminal box material: FC 200 cast iron
- Flying leads for motor connection
- PT100 3 wires - one per phase for frame size 5010/11 up to L6808/09 - Voltage 1.2kV and above

Optional Features

- Voltage: 5,000 to 6,600 V
- Accessories terminal box (standard for medium and high voltage motors)
- Thermal protections: Thermostats or RTD's (Pt-100) on windings or bearings
- Space heaters
- Cable glands
- Roller bearings

Features that make a difference:

- 50/60 Hz rated up to 250 HP (Same Horse Power at 50 Hz with a 1.0 Service Factor)
- Class F insulation (Impregnation Resin and Magnet wire are class H)
- Class B Rise at 1.15 Service Factor
- F1 Mounted (Cast Iron Frame motors are F2 convertible)
- Stainless Steel Nameplate - Laser etched with high contrast background (Cast Iron Frames only)
- Cast Iron Frames: Regreasable ball bearings (Frames 254T and up)

Inverter Rated:
1000:1 for variable torque
4:1 for constant torque

** Frame 404/5T 150HP and up 2:1CT and 1000:1VT*

ADDITIONAL TECHNICAL DATA

ELECTRICAL DATA: B-16
MECHANICAL DATA: B-74

Data subject to change without notice.

Three-Phase General Purpose Motors

ODP ROLLED STEEL

Standard Features:

- Rated Output: 0.25 to 25 HP
- Number of Poles: 2 through 6
- Class F insulation
- Frame Sizes: NEMA 56 to 254/6T
- Efficiency levels: NEMA Premium®
- Frequency: 60 Hz (dual rated 50 Hz 190-220/380-415V)
- IP21 standard
- F1 mount as standard
- Foot mount / C-face / Footless availability
- Enclosure: ODP
- Aluminum endshields
- Cast Iron flanges for improved strength (182/4TC and larger)
- Internal bolts, giving a clean surface to the motor, avoiding trapping materials and allowing easy paint job after assembly to the load if required
- Double shielded ball bearings on frames 56 to 213/5T. Optional double sealed ball bearings and/or bearing cap
- Versions: General Purpose, Jet Pump, Close-coupled Pump type “JM” and “JP” and Compressor Duty

Optional Features:

- F2 and Build Option F3 mount
- Build Option Enclosure: ODPAO
- Regreasable bearings optional on 182/4T and 213/5T
- Double sealed ball bearings and/or bearing cap
- Drip cover
- Internal AEGIS® SGR
- Space heaters and thermal protection (thermostats or thermistors)
- Refer to the mod section for more options

Features that make a difference:

- New ventilation system for improved thermal performance
- Robust feet design suitable for tougher applications
- New and more robust eyebolts design (frames 182/4T and up) plus a second eyebolt on non-drive end allowing vertical lifting capability (frames 213/5T and 254/6T)
- Oversized diagonally split aluminum terminal box that exceeds IP55 requirements
- Terminal box rotatable in 90 degrees increments for flexibility during installation
- Option for internal AEGIS® SGR
- Color coded leads as standard for easy wiring
- Regreasable ball bearings on 254/6T frame as standard (optional for 182/4T and 213/5T)
- Bearing cap as standard on flanged motors, optional on non flanged
- Suitable for VFD operation as per NEMA MG1 part 31.4.4.2
- Motor frame painting system 500 hours salt spray resistant

ADDITIONAL TECHNICAL DATA

ELECTRICAL DATA: B-16

MECHANICAL DATA: B-73

ODP - Foot Mount

HP	kW	RPM	Frame	Catalog Number	List Price	Mult. Symbol	Approx. Shipping Weight (lbs)	Service Factor	FL Amps @ High	FL. Eff (%)	"C" Dimension (in)	Voltage (V)	Notes
0.25	0.18	3600	56	.25360T3E56-S	$231	F2B	19	1.35	0.46	65.6	10.315	230/460	9
		1800	48	.25180T3E48-S	$235	F2B	18	1.35	0.48	70.0	9.492	230/460	9
		1800	56	.25180T3E56-S	$235	F2B	19	1.35	0.53	69.5	9.921	230/460	9
		1200	56	.25120T3E56-S	$288	F2B	21	1.35	0.55	67.5	10.315	230/460	9
0.33	0.25	3600	56	.33360T3E56-S	$242	F2B	19	1.35	0.61	69.5	10.315	230/460	9
		1800	56	.33180T3E56-S	$256	F2B	20	1.35	0.67	73.4	10.315	230/460	9
		1800	56	.33180T3H56-S	$269	F2B	20	1.35	0.54	73.4	10.315	575	9
		1200	56	.33120T3E56-S	$333	F2B	22	1.35	0.70	71.4	10.315	230/460	9
0.5	0.37	3600	56	.50360T3E56-S	$258	F2B	20	1.25	0.81	73.4	10.315	230/460	9
		1800	56	.50180T3E56-S	$296	F2B	24	1.25	0.86	78.2	10.709	230/460	9
		1800	56	.50180T3H56-S	$311	F2B	24	1.25	0.69	78.2	10.709	575	9
		1200	56	.50120T3E56-S	$349	F2B	25	1.25	0.93	75.3	10.709	230/460	9
0.75	0.55	3600	56	.75360T3E56-S	$305	F2B	22	1.25	1.14	76.8	10.709	230/460	9
		1800	56	.75180T3E56-S	$330	F2B	27	1.25	1.15	81.1	11.102	230/460	9
		1800	56	.75180T3H56-S	$347	F2B	27	1.25	0.92	81.1	11.102	575	9
		1200	56H	.75120T3E56-S	$384	F2B	38	1.15	1.26	81.7	12.677	230/460	9
1	0.75	3600	56	001360T3E56-S	$355	F2B	23	1.25	1.51	77.0	10.709	230/460	9
		3600	143/5T	001360T3E143T-S	$385	N1S	29	1.15	1.40	80.0	11.181	230/460	9
		1800	56	001180T3E56-S	$350	F2B	30	1.15	1.57	83.5	11.495	230/460	9
		1800	143/5T	001180T3E143T-S	$390	N1S	38	1.15	1.50	85.5	11.181	230/460	9
		1800	143/5T	001180T3H143T-S	$390	N1S	38	1.15	1.20	85.5	11.181	575	9
		1800	143/5T	001180T3P143T-S	$390	N1S	38	1.15	3.50	85.5	11.181	200	9
		1200	56H	001120T3E56-S	$458	F2B	42	1.15	1.68	82.5	13.070	230/460	9
		1200	143/5T	001120T3E145T-S	$446	N1S	38	1.15	1.70	82.5	11.181	230/460	9
		1200	143/5T	001120T3H145T-S	$446	N1S	38	1.15	1.30	82.5	11.181	575	9
1.5	1.1	3600	56	001560T3E56-S	$380	F2B	30	1.15	1.85	84.0	11.889	230/460	9
		3600	143/5T	001560T3E143T-S	$442	N1S	33	1.15	1.90	84.0	11.181	230/460	9
		3600	143/5T	001560T3H143T-S	$442	N1S	33	1.15	1.50	84.0	11.181	575	9
		1800	56H	001580T3E56-S	$361	F2B	40	1.15	2.10	86.5	12.677	230/460	9
		1800	143/5T	001580T3E145T-S	$449	N1S	45	1.15	2.10	86.5	12.362	230/460	9
		1800	143/5T	001580T3H145T-S	$449	N1S	45	1.15	1.70	86.5	12.362	575	9
		1800	143/5T	001580T3P145T-S	$449	N1S	45	1.15	4.80	86.5	12.362	200	9
		1200	182/4T	001520T3E182T-S	$588	N1S	63	1.15	2.30	86.5	13.976	230/460	9
2	1.5	3600	56H	002360T3E56-S	$436	F2B	38	1.15	2.42	85.5	12.677	230/460	9
		3600	143/5T	002360T3E145T-S	$487	N1S	40	1.15	2.40	85.5	11.969	230/460	9
		3600	143/5T	002360T3H145T-S	$487	N1S	40	1.15	1.90	85.5	11.969	575	9
		1800	56H	002180T3E56-S	$371	F2B	40	1.15	2.69	86.5	12.677	230/460	9
		1800	143/5T	002180T3E145T-S	$492	N1S	43	1.15	2.70	86.5	12.362	230/460	9
		1800	143/5T	002180T3H145T-S	$492	N1S	43	1.15	2.20	86.5	12.362	575	9
		1800	143/5T	002180T3P145T-S	$492	N1S	43	1.15	6.20	86.5	12.362	200	9
		1200	182/4T	002120T3E184T-S	$597	N1S	73	1.15	3.00	87.5	14.764	230/460	9
		1200	182/4T	002120T3H184T-S	$597	N1S	73	1.15	2.40	87.5	14.764	575	9

continued on next page

Please refer to back cover for description of "NOTES"

For detailed specifications, data sheets, drawings and performance curves visit http://www.weg.net

Data subject to change without notice.

ODP - Foot Mount - *continued*

HP	kW	RPM	Frame	Catalog Number	List Price	Mult. Symbol	Approx. Shipping Weight (lbs)	Service Factor	FL Amps @ High	FL. Eff (%)	"C" Dimension (in)	Voltage (V)	Notes
3	2.2	3600	56H	003360T3E56-S	$485	F2B	42	1.15	3.59	85.5	13.070	230/460	9
		3600	143/5T	003360T3E145T-S	$545	N1S	43	1.15	3.60	85.5	12.362	230/460	9
		3600	143/5T	003360T3H145T-S	$545	N1S	43	1.15	2.90	85.5	12.362	575	9
		1800	56HZ	003180T3E56Z-S	$481	F2B	48	1.15	3.97	86.9	13.071	230/460	9
		1800	182/4T	003180T3E182T-S	$524	N1S	73	1.15	3.90	89.5	15.157	230/460	9
		1800	182/4T	003180T3H182T-S	$524	N1S	73	1.15	3.10	89.5	15.157	575	9
		1800	182/4T	003180T3P182T-S	$524	N1S	73	1.15	8.90	89.5	15.157	200	9
		1800	182/4T	003180T3V182T-S	$524	N1S	72	1.15	4.40	89.5	15.157	200/400	9
		1200	213/5T	003120T3E213T-S	$775	N1S	113	1.15	4.20	88.5	16.575	230/460	9
		1200	213/5T	003120T3H213T-S	$775	N1S	113	1.15	3.30	88.5	16.575	575	9
5	3.7	3600	182/4T	005360T3E182T-S	$651	N1S	61	1.15	6.10	86.5	14.764	230/460	9
		3600	182/4T	005360T3H182T-S	$651	N1S	61	1.15	4.90	86.5	14.764	575	9
		3600	182/4T	005360T3V182T-S	$651	N1S	61	1.15	7.00	86.5	14.764	200/400	9
		1800	182/4T	005180T3E184T-S	$630	N1S	88	1.15	6.30	89.5	16.339	230/460	9
		1800	182/4T	005180T3H184T-S	$630	N1S	88	1.15	5.10	89.5	16.339	575	9
		1800	182/4T	005180T3P184T-S	$630	N1S	88	1.15	14.6	89.5	16.339	200	9
		1800	182/4T	005180T3V184T-S	$630	N1S	88	1.15	7.30	89.5	16.339	200/400	9
		1200	213/5T	005120T3E215T-S	$1,057	N1S	135	1.15	6.70	89.5	16.969	230/460	9
		1200	213/5T	005120T3H215T-S	$1,057	N1S	135	1.15	5.40	89.5	16.969	575	9
7.5	5.5	3600	182/4T	007360T3E184T-S	$920	N1S	76	1.15	8.70	88.5	15.157	230/460	9
		3600	182/4T	007360T3H184T-S	$920	N1S	76	1.15	6.90	88.5	15.157	575	9
		1800	213/5T	007180T3E213T-S	$910	N1S	125	1.15	9.30	91.0	16.575	230/460	9
		1800	213/5T	007180T3H213T-S	$910	N1S	125	1.15	7.40	91.0	16.575	575	9
		1800	213/5T	007180T3P213T-S	$910	N1S	125	1.15	21.3	91.0	16.575	200	9
		1200	254/6T	007120T3E254T-S	$1,467	N1S	209	1.15	10.2	90.2	20.472	230/460	9
		1200	254/6T	007120T3H254T-S	$1,467	N1S	209	1.15	8.20	90.2	20.472	575	9
		1200	254T	007120T3E254T	$1,467	N1B	249	1.15	9.69	90.2	20.669	230/460	
10	7.5	3600	213/5T	010360T3E213T-S	$1,081	N1S	126	1.15	12.0	89.5	16.969	230/460	9
		3600	213/5T	010360T3H213T-S	$1,081	N1S	126	1.15	9.60	89.5	16.969	575	9
		1800	213/5T	010180T3E215T-S	$1,102	N1S	130	1.15	12.4	91.7	16.575	230/460	9
		1800	213/5T	010180T3H215T-S	$1,102	N1S	130	1.15	9.90	91.7	16.575	575	9
		1800	213/5T	010180T3P215T-S	$1,102	N1S	130	1.15	28.5	91.7	16.575	200	9
		1200	254/6T	010120T3E256T-S	$1,717	N1S	237	1.15	13.9	91.7	20.472	230/460	9
		1200	254/6T	010120T3H256T-S	$1,717	N1S	237	1.15	11.1	91.7	20.472	575	9
		1200	256T	010120T3E256T	$1,717	N1B	282	1.15	12.8	91.7	22.401	230/460	
15	11	3600	213/5T	015360T3E215T-S	$1,492	N1S	141	1.15	17.2	90.2	17.756	230/460	9
		3600	213/5T	015360T3H215T-S	$1,492	N1S	141	1.15	13.8	90.2	17.756	575	9
		1800	254/6T	015180T3E254T-S	$1,477	N1S	211	1.15	18.6	93.0	20.472	230/460	9
		1800	254/6T	015180T3H254T-S	$1,477	N1S	211	1.15	14.9	93.0	20.472	575	9
		1800	254/6T	015180T3P254T-S	$1,477	N1S	211	1.15	42.8	93.0	20.472	200	9
		1800	254/6T	015180T3V254T-S	$1,477	N1S	211	1.15	21.4	93.0	20.472	200/400	9
		1800	254T	015180T3E254T	$1,477	N1B	278	1.15	18.6	93.0	20.669	230/460	
		1800	254T	015180T3H254T	$1,477	N1B	263	1.15	14.9	93.0	20.669	575	
		1800	254T	015180T3P254T	$1,477	N1B	264	1.15	42.8	93.0	20.669	200	
		1200	284T	015120T3E284T	$2,412	N1B	366	1.15	17.7	91.7	23.386	230/460	
		1200	284T	015120T3H284T	$2,412	N1B	365	1.15	14.2	91.7	23.386	575	

continued on next page

Please refer to back cover for description of "NOTES"

For detailed specifications, data sheets, drawings and performance curves visit http://www.weg.net

ODP - Foot Mount - *continued*

HP	kW	RPM	Frame	Catalog Number	List Price	Mult. Symbol	Approx. Shipping Weight (lbs)	Service Factor	FL Amps @ High	FL. Eff (%)	"C" Dimension (in)	Voltage (V)	Notes
20	15	3600	254/6T	020360T3E254T-S	$1,760	N1S	187	1.15	23.8	91.0	20.472	230/460	9
		3600	254/6T	020360T3H254T-S	$1,760	N1S	187	1.15	19.0	91.0	20.472	575	9
		3600	254T	020360T3E254T	$1,760	N1B	222	1.15	24.6	91.0	20.669	230/460	
		3600	254T	020360T3H254T	$1,760	N1B	221	1.15	19.7	91.0	20.669	575	
		1800	254/6T	020180T3E256T-S	$1,832	N1S	235	1.15	25.0	93.0	20.472	230/460	9
		1800	254/6T	020180T3H256T-S	$1,832	N1S	235	1.15	20.0	93.0	20.472	575	9
		1800	254/6T	020180T3P256T-S	$1,832	N1S	235	1.15	57.5	93.0	20.472	200	9
		1800	254/6T	020180T3V256T-S	$1,832	N1S	235	1.15	28.8	93.0	20.472	200/400	9
		1800	256T	020180T3E256T	$1,832	N1B	292	1.15	24.7	93.0	22.401	230/460	
		1800	256T	020180T3H256T	$1,832	N1B	300	1.15	19.8	93.0	22.401	575	
		1800	256T	020180T3P256T	$1,832	N1B	301	1.15	56.8	93.0	22.401	200	
		1200	286T	020120T3E286T	$3,034	N1B	415	1.15	24.0	92.4	24.882	230/460	
		1200	286T	020120T3H286T	$3,034	N1B	414	1.15	19.2	92.4	24.882	575	
25	18.5	3600	254/6T	025360T3E256T-S	$2,139	N1S	202	1.15	29.1	91.7	20.472	230/460	9
		3600	254/6T	025360T3H256T-S	$2,139	N1S	202	1.15	23.3	91.7	20.472	575	9
		3600	256T	025360T3E256T	$2,139	N1B	263	1.15	29.8	91.7	22.401	230/460	
		3600	256T	025360T3H256T	$2,139	N1B	263	1.15	23.8	91.7	22.401	575	
		1800	284TS	025180T3E284TS	$2,160	N1B	378	1.15	29.9	93.6	22.000	230/460	
		1800	284TS	025180T3H284TS	$2,159	N1B	377	1.15	23.9	93.6	22.000	575	
		1800	284T	025180T3E284T	$2,160	N1B	372	1.15	29.9	93.6	23.386	230/460	
		1800	284T	025180T3H284T	$2,160	N1B	379	1.15	23.9	93.6	23.386	575	
		1800	284T	025180T3P284T	$2,159	N1B	380	1.15	68.8	93.6	23.386	200	
		1200	324T	025120T3E324T	$3,519	N1B	505	1.15	30.4	93.0	26.181	230/460	
30	22	3600	284TS	030360T3E284TS	$2,487	N1B	351	1.15	34.7	92.4	22.000	230/460	
		3600	284TS	030360T3H284TS	$2,487	N1B	350	1.15	27.8	92.4	22.000	575	
		3600	284TS	030360T3V284TS	$2,487	N1B	351	1.15	39.9	92.4	22.000	200/400	
		1800	286TS	030180T3E286TS	$2,530	N1B	432	1.15	35.4	94.1	23.504	230/460	
		1800	286TS	030180T3H286TS	$2,530	N1B	429	1.15	28.3	94.1	23.504	575	
		1800	286TS	030180T3V286TS	$2,590	N1B	432	1.15	40.7	94.1	23.504	200/400	
		1800	286T	030180T3E286T	$2,530	N1B	424	1.15	35.4	94.1	24.882	230/460	
		1800	286T	030180T3H286T	$2,530	N1B	432	1.15	28.3	94.1	24.882	575	
		1800	286T	030180T3P286T	$2,530	N1B	435	1.15	81.4	94.1	24.882	200	
		1200	326T	030120T3E326T	$3,890	N1B	567	1.15	36.0	93.6	27.667	230/460	
		1200	326T	030120T3H326T	$3,890	N1B	578	1.15	28.8	93.6	27.667	575	
40	30	3600	286TS	040360T3E286TS	$3,308	N1B	390	1.15	47.1	93.0	23.504	230/460	
		3600	286TS	040360T3H286TS	$3,308	N1B	389	1.15	37.7	93.0	23.504	575	
		3600	286TS	040360T3V286TS	$3,308	N1B	390	1.15	54.2	93.0	23.504	200/400	
		1800	324TS	040180T3E324TS	$3,095	N1B	506	1.15	48.2	94.1	24.685	230/460	
		1800	324TS	040180T3H324TS	$3,095	N1B	548	1.15	38.6	94.1	24.685	575	
		1800	324TS	040180T3V324TS	$3,095	N1B	507	1.15	55.4	94.1	24.685	200/400	
		1800	324T	040180T3E324T	$3,095	N1B	490	1.15	48.2	94.1	26.181	230/460	
		1800	324T	040180T3H324T	$3,095	N1B	506	1.15	38.6	94.1	26.181	575	
		1800	324T	040180T3P324T	$3,095	N1B	509	1.15	111	94.1	26.181	200	
		1200	364/5T	040120T3E364T	$5,544	N1B	914	1.15	47.1	94.1	29.764	230/460	
		1200	364/5T	040120T3H364T	$5,544	N1B	910	1.15	37.7	94.1	29.764	575	

continued on next page

Please refer to back cover for description of "NOTES"

For detailed specifications, data sheets, drawings and performance curves visit http://www.weg.net

Data subject to change without notice.

ODP - Foot Mount - *continued*

HP	kW	RPM	Frame	Catalog Number	List Price	Mult. Symbol	Approx. Shipping Weight (lbs)	Service Factor	FL Amps @ High	FL. Eff (%)	"C" Dimension (in)	Voltage (V)	Notes
50	37	3600	324TS	050360T3E324TS	$3,820	N1B	511	1.15	59.1	93.6	24.685	230/460	
		3600	324TS	050360T3H324TS	$3,820	N1B	510	1.15	47.3	93.6	24.685	575	
		3600	324TS	050360T3V324TS	$3,820	N1B	512	1.15	68.0	93.6	24.685	200/400	
		1800	326TS	050180T3E326TS	$3,788	N1B	575	1.15	59.9	94.5	26.181	230/460	
		1800	326TS	050180T3G326TS	$3,788	N1B	574	1.15	59.9	94.5	26.181	460	
		1800	326TS	050180T3H326TS	$3,788	N1B	580	1.15	47.9	94.5	26.181	575	
		1800	326TS	050180T3V326TS	$3,788	N1B	575	1.15	68.9	94.5	26.181	200/400	
		1800	326T	050180T3E326T	$3,788	N1B	554	1.15	59.9	94.5	27.667	230/460	
		1800	326T	050180T3H326T	$3,788	N1B	575	1.15	47.9	94.5	27.667	575	
		1800	326T	050180T3P326T	$3,788	N1B	577	1.15	138	94.5	27.667	200	
		1200	364/5T	050120T3E365T	$6,392	N1B	941	1.15	58.8	94.1	29.764	230/460	
60	45	3600	326TS	060360T3E326TS	$4,581	N1B	549	1.15	71.0	93.6	26.181	230/460	
		3600	326TS	060360T3G326TS	$4,581	N1B	558	1.15	71.0	93.6	26.181	460	
		3600	326TS	060360T3H326TS	$4,581	N1B	547	1.15	56.8	93.6	26.181	575	
		3600	326TS	060360T3V326TS	$4,581	N1B	552	1.15	81.7	93.6	26.181	200/400	
		1800	364/5TS	060180T3E364TS	$4,443	N1B	888	1.15	69.9	95.0	27.638	230/460	
		1800	364/5TS	060180T3G364TS	$4,443	N1B	887	1.15	69.9	95.0	27.638	460	
		1800	364/5TS	060180T3H364TS	$4,443	N1B	893	1.15	55.9	95.0	27.638	575	
		1800	364/5TS	060180T3V364TS	$4,443	N1B	889	1.15	80.4	95.0	27.638	200/400	
		1800	364/5T	060180T3E364T	$4,443	N1B	846	1.15	69.9	95.0	29.764	230/460	
		1800	364/5T	060180T3G364T	$4,443	N1B	951	1.15	69.9	95.0	29.764	460	
		1800	364/5T	060180T3H364T	$4,443	N1B	897	1.15	55.9	95.0	29.764	575	
		1200	404/5T	060120T3E404T	$7,562	N1B	1079	1.15	70.3	94.5	34.133	230/460	
75	55	3600	364/5TS	075360T3E364TS	$5,799	N1B	847	1.15	83.4	94.1	27.638	230/460	
		3600	364/5TS	075360T3G364TS	$5,799	N1B	847	1.15	83.4	94.1	27.638	460	
		3600	364/5TS	075360T3H364TS	$5,799	N1B	851	1.15	66.7	94.1	27.638	575	
		3600	364/5TS	075360T3V364TS	$5,799	N1B	848	1.15	95.9	94.1	27.638	200/400	
		1800	364/5TS	075180T3E365TS	$5,658	N1B	902	1.15	83.5	95.0	27.638	230/460	
		1800	364/5TS	075180T3G365TS	$5,658	N1B	952	1.15	83.5	95.0	27.638	460	
		1800	364/5TS	075180T3H365TS	$5,658	N1B	962	1.15	66.8	95.0	27.638	575	
		1800	364/5TS	075180T3V365TS	$5,658	N1B	955	1.15	96.0	95.0	27.638	200/400	
		1800	364/5T	075180T3E365T	$5,658	N1B	904	1.15	83.5	95.0	29.764	230/460	
		1800	364/5T	075180T3G365T	$5,658	N1B	956	1.15	83.5	95.0	29.764	460	
		1800	364/5T	075180T3H365T	$5,658	N1B	966	1.15	66.8	95.0	29.764	575	
		1200	404/5T	075120T3E405T	$8,358	N1B	1118	1.15	85.9	94.5	34.133	230/460	

continued on next page

Please refer to back cover for description of "NOTES"

For detailed specifications, data sheets, drawings and performance curves visit http://www.weg.net

ODP - Foot Mount - *continued*

HP	kW	RPM	Frame	Catalog Number	List Price	Mult. Symbol	Approx. Shipping Weight (lbs)	Service Factor	FL Amps @ High	FL. Eff (%)	"C" Dimension (in)	Voltage (V)	Notes
100	75	3600	364/5TS	10036OT3E365TS	$6,644	N1B	851	1.15	112	94.5	27.638	230/460	
		3600	364/5TS	10036OT3G365TS	$6,644	N1B	907	1.15	112	94.5	27.638	460	
		3600	364/5TS	10036OT3H365TS	$6,644	N1B	912	1.15	89.6	94.5	27.638	575	
		3600	364/5TS	10036OT3V365TS	$6,644	N1B	909	1.15	129	94.5	27.638	200/400	
		1800	404/5TS	10018OT3E404TS	$7,141	N1B	893	1.15	113	95.4	31.141	230/460	
		1800	404/5TS	10018OT3G404TS	$7,141	N1B	1076	1.15	113	95.4	31.141	460	
		1800	404/5TS	10018OT3V404TS	$7,141	N1B	1082	1.15	130	95.4	31.141	200/400	
		1800	404/5T	10018OT3E404T	$7,141	N1B	1069	1.15	113	95.4	34.133	230/460	
		1800	404/5T	10018OT3ERB404T	$7,141	N1B	1108	1.15	113	95.4	34.133	230/460	14
		1800	404/5T	10018OT3G404T	$7,141	N1B	1097	1.15	113	95.4	34.133	460	
		1800	404/5T	10018OT3GRB404T	$7,141	N1B	1104	1.15	113	95.4	34.133	460	14
		1800	404/5T	10018OT3H404T	$7,141	N1B	1111	1.15	90.4	95.4	34.133	575	
		1200	444/5T	10012OT3E444T	$11,863	N1B	1498	1.15	125	95.0	39.803	230/460	
		1200	444/5T	10012OT3G444T	$11,863	N1B	1662	1.15	125	95.0	39.803	460	
125	90	3600	404/5TS	12536OT3E404TS	$8,826	N1B	1058	1.15	133	94.5	31.141	230/460	
		3600	404/5TS	12536OT3G404TS	$8,826	N1B	1052	1.15	133	94.5	31.141	460	
		3600	404/5TS	12536OT3H404TS	$8,826	N1B	1061	1.15	106	94.5	31.141	575	
		1800	404/5TS	12518OT3E405TS	$7,981	N1B	1160	1.15	136	95.4	31.141	230/460	
		1800	404/5TS	12518OT3G405TS	$7,981	N1B	1157	1.15	136	95.4	31.141	460	
		1800	404/5T	12518OT3E405T	$7,981	N1B	1084	1.15	136	95.4	34.133	230/460	
		1800	404/5T	12518OT3ERB405T	$7,981	N1B	1188	1.15	136	95.4	34.133	230/460	14
		1800	404/5T	12518OT3G405T	$7,981	N1B	1126	1.15	136	95.4	34.133	460	
		1800	404/5T	12518OT3GRB405T	$7,981	N1B	1185	1.15	136	95.4	34.133	460	14
		1800	404/5T	12518OT3H405T	$7,981	N1B	1186	1.15	109	95.4	34.133	575	
		1200	444/5T	12512OT3G445T	$12,753	N1B	1575	1.15	158	95.0	39.803	460	
150	110	3600	404/5TS	15036OT3G405TS	$11,416	N1B	1023	1.15	162	94.5	31.141	460	
		3600	404/5TS	15036OT3H405TS	$11,416	N1B	1117	1.15	130	94.5	31.141	575	
		1800	444/5TS	15018OT3G444TS	$10,668	N1B	1517	1.15	166	95.8	36.062	460	
		1800	444/5T	15018OT3G444T	$10,668	N1B	1569	1.15	166	95.8	39.803	460	
		1800	444/5T	15018OT3GRB444T	$10,668	N1B	1642	1.15	166	95.8	39.803	460	14
		1800	444/5T	15018OT3H444T	$10,668	N1B	1625	1.15	133	95.8	39.803	575	
		1200	444/5T	15012OT3G445T	$13,615	N1B	1717	1.15	183	95.4	39.803	460	
200	150	3600	444/5TS	20036OT3G444TS	$14,504	N1B	1503	1.15	223	95.0	36.062	460	
		3600	444/5TS	20036OT3H444TS	$14,504	N1B	1497	1.15	178	95.0	36.062	575	
		1800	444/5TS	20018OT3G445TS	$13,004	N1B	1486	1.15	229	95.8	36.062	460	
		1800	444/5T	20018OT3G445T	$13,004	N1B	1601	1.15	229	95.8	39.803	460	
		1800	444/5T	20018OT3GRB445T	$13,004	N1B	1612	1.15	229	95.8	39.803	460	14
		1200	447/9T	20012OT3G447/9T-W40	$23,380	N1B	2209	1.15	241	95.4	48.317	460	37
250	185	3600	444/5TS	25036OT3G445TS	$18,983	N1B	1611	1.15	272	95.0	36.062	460	
		3600	444/5TS	25036OT3H445TS	$18,983	N1B	1982	1.15	218	95.0	36.062	575	
		1800	444/5TS	25018OT3G445TS	$15,513	N1B	1601	1.15	275	95.8	36.062	460	
		1800	444/5T	25018OT3G445T	$15,513	N1B	1647	1.15	275	95.8	39.803	460	
		1800	444/5T	25018OT3GRB445T	$15,513	N1B	1746	1.15	275	95.8	39.803	460	14
		1800	444/5T	25018OT3H445T	$15,513	N1B	1717	1.15	220	95.8	39.803	575	
		1200	447/9T	25012OT3G447/9T-W40	$27,249	N1B	2363	1.15	300	95.4	48.317	460	37

continued on next page

Please refer to back cover for description of "NOTES"

For detailed specifications, data sheets, drawings and performance curves visit http://www.weg.net

Data subject to change without notice.

ODP - Foot Mount - *continued*

HP	kW	RPM	Frame	Catalog Number	List Price	Mult. Symbol	Approx. Shipping Weight (lbs)	Service Factor	FL Amps @ High	FL. Eff (%)	"C" Dimension (in)	Voltage (V)	Notes
300	220	3600	444/5TS	300360T3G445TS	$22,294	N1B	1701	1.15	322	95.4	36.062	460	
		1800	447/9TS	300180T3G447/9TS-W40	$24,878	N1B	2079	1.15	324	95.8	42.959	460	
		1800	447/9TSD	300180T3H447/9TSD-W4	$25,733	N1B	2135	1.15	259	95.8	42.959	575	
		1800	447/9T	300180T3G447/9T-W40	$24,878	N1B	2124	1.15	324	95.8	48.317	460	
		1200	447/9T	300120T3G447/9T-W40	$29,853	N1B	2809	1.15	366	95.4	48.317	460	37
350	260	3600	447/9TS	350360T3G447/9TS-W40	$25,055	N1B	2108	1.15	384	95.4	44.567	460	37
		1800	447/9TS	350180T3G447/9TS-W40	$25,174	N1B	2242	1.15	396	95.8	42.959	460	
		1800	447/9T	350180T3G447/9T-W40	$25,174	N1B	2319	1.15	396	95.8	48.317	460	
400	300	3600	447/9TS	400360T3G447/9TS-W40	$26,678	N1B	2189	1.15	442	95.8	44.567	460	37
		1800	447/9TS	400180T3G447/9TS-W40	$28,311	N1B	2452	1.15	452	95.8	42.959	460	
		1800	447/9T	400180T3G447/9T-W40	$28,311	N1B	2509	1.15	452	95.8	48.317	460	
450	330	3600	447/9TS	450360T3G447/9TS-W40	$28,239	N1B	2287	1.15	478	96.2	44.567	460	37
500	370	3600	447/9TS	500360T3G447/9TS-W40	$31,476	N1B	2377	1.15	536	96.2	44.567	460	37
550	400	3600	447/9TS	550360T3G447/9TS-W40	$32,629	N1B	2422	1.15	580	96.2	44.567	460	37
600	440	3600	447/9TS	600360T3G447/9TS-W40	$32,994	N1B	2540	1.15	638	96.2	44.567	460	37
700	515	3600	5010/11S	700360T3Q5010S-W40	$42,603	N1B	3418	1.15	767	95.8	56.000	460	37;43
800	595	3600	5010/11S	800360T3Q5010S-W40	$45,039	N1B	3528	1.15	885	96.2	56.000	460	37;43

Please refer to back cover for description of "NOTES"

For detailed specifications, data sheets, drawings and performance curves visit http://www.weg.net

ODP - C-Face - Foot Mount

HP	kW	RPM	Frame	Catalog Number	List Price	Mult. Symbol	Approx. Shipping Weight (lbs)	Service Factor	FL Amps @ High	FL. Eff (%)	"C" Dimension (in)	Voltage (V)	Notes
0.25	0.18	3600	56C	.25360T3E56C-S	$259	F2B	19	1.35	0.46	65.6	10.315	230/460	9
		1800	56C	.25180T3E56C-S	$263	F2B	19	1.35	0.53	69.5	9.921	230/460	9
		1200	56C	.25120T3E56C-S	$316	F2B	21	1.35	0.55	67.5	10.315	230/460	9
0.33	0.25	3600	56C	.33360T3E56C-S	$270	F2B	19	1.35	0.61	69.5	10.315	230/460	9
		1800	56C	.33180T3E56C-S	$284	F2B	20	1.35	0.67	73.4	10.315	230/460	9
		1200	56C	.33120T3E56C-S	$361	F2B	22	1.35	0.70	71.4	10.315	230/460	9
0.5	0.37	3600	56C	.50360T3E56C-S	$286	F2B	20	1.25	0.81	73.4	10.315	230/460	9
		1800	56C	.50180T3E56C-S	$324	F2B	24	1.25	0.86	78.2	10.709	230/460	9
		1200	56C	.50120T3E56C-S	$377	F2B	25	1.25	0.93	75.3	10.709	230/460	9
0.75	0.55	3600	56C	.75360T3E56C-S	$333	F2B	22	1.25	1.14	76.8	10.709	230/460	9
		1800	56C	.75180T3E56C-S	$358	F2B	27	1.25	1.15	81.1	11.102	230/460	9
		1800	56C	.75180T3H56C-S	$358	F2B	27	1.25	0.92	81.1	11.102	575	9
		1200	56HC	.75120T3E56C-S	$412	F2B	38	1.15	1.26	81.7	12.677	230/460	9
1	0.75	3600	56C	00136OT3E56C-S	$383	F2B	23	1.25	1.51	77.0	10.709	230/460	9
		1800	56C	00118OT3E56C-S	$378	F2B	30	1.15	1.57	83.5	11.495	230/460	9
		1800	143/5TC	00118OT3E143TC-S	$424	N1S	38	1.15	1.50	85.5	11.181	230/460	9
		1800	143/5TC	00118OT3H143TC-S	$424	N1S	38	1.15	1.20	85.5	11.181	575	9
		1800	143/5TC	00118OT3P143TC-S	$424	N1S	38	1.15	3.50	85.5	11.181	200	9
		1200	56HC	00112OT3E56C-S	$486	F2B	42	1.15	1.68	82.5	13.070	230/460	9
1.5	1.1	3600	56C	00156OT3E56C-S	$408	F2B	30	1.15	1.85	84.0	11.889	230/460	9
		3600	143/5TC	00156OT3E143TC-S	$476	N1S	33	1.15	1.90	84.0	11.181	230/460	9
		3600	143/5TC	00156OT3H143TC-S	$476	N1S	33	1.15	1.50	84.0	11.181	575	9
		1800	56HC	00158OT3E56C-S	$389	F2B	40	1.15	2.10	86.5	12.677	230/460	9
		1800	143/5TC	00158OT3E145TC-S	$483	N1S	45	1.15	2.10	86.5	12.362	230/460	9
		1800	143/5TC	00158OT3H145TC-S	$483	N1S	45	1.15	1.70	86.5	12.362	575	9
		1800	143/5TC	00158OT3P145TC-S	$483	N1S	45	1.15	4.80	86.5	12.362	200	9
2	1.5	3600	56HC	00236OT3E56C-S	$464	F2B	38	1.15	2.42	85.5	12.677	230/460	9
		3600	143/5TC	00236OT3E145TC-S	$521	N1S	40	1.15	2.40	85.5	11.969	230/460	9
		3600	143/5TC	00236OT3H145TC-S	$521	N1S	40	1.15	1.90	85.5	11.969	575	9
		1800	56HC	00218OT3E56C-S	$399	F2B	40	1.15	2.69	86.5	12.677	230/460	9
		1800	143/5TC	00218OT3E145TC-S	$526	N1S	43	1.15	2.70	86.5	12.362	230/460	9
		1800	143/5TC	00218OT3H145TC-S	$526	N1S	43	1.15	2.20	86.5	12.362	575	9
		1800	143/5TC	00218OT3V145TC-S	$526	N1S	43	1.15	3.10	86.5	12.362	200/400	9
		1200	182/4TC	00212OT3E184TC-S	$635	N1S	73	1.15	3.00	87.5	14.764	230/460	9
		1200	182/4TC	00212OT3H184TC-S	$635	N1S	73	1.15	2.40	87.5	14.764	575	9
3	2.2	3600	56HC	00336OT3E56C-S	$513	F2B	42	1.15	3.59	85.5	13.070	230/460	9
		3600	143/5TC	00336OT3E145TC-S	$579	N1S	43	1.15	3.60	85.5	12.362	230/460	9
		3600	143/5TC	00336OT3H145TC-S	$579	N1S	43	1.15	2.90	85.5	12.362	575	9
		3600	143/5TC	00336OT3V145TC-S	$579	N1S	43	1.15	4.10	85.5	12.362	200/400	9
		1800	182/4TC	00318OT3E182TC-S	$562	N1S	73	1.15	3.90	89.5	15.157	230/460	9
		1800	182/4TC	00318OT3H182TC-S	$562	N1S	82	1.15	3.10	89.5	15.157	575	9
		1800	182/4TC	00318OT3V182TC-S	$562	N1S	82	1.15	4.40	89.5	15.157	200/400	9
		1200	213/5TC	00312OT3E213TC-S	$826	N1S	113	1.15	4.20	88.5	16.575	230/460	9
		1200	213/5TC	00312OT3H213TC-S	$826	N1S	113	1.15	3.30	88.5	16.575	575	9

continued on next page

Please refer to back cover for description of "NOTES"

For detailed specifications, data sheets, drawings and performance curves visit http://www.weg.net

Data subject to change without notice.

ODP - C-Face - Foot Mount - *continued*

HP	kW	RPM	Frame	Catalog Number	List Price	Mult. Symbol	Approx. Shipping Weight (lbs)	Service Factor	FL Amps @ High	FL. Eff (%)	"C" Dimension (in)	Voltage (V)	Notes
5	3.7	3600	182/4TC	005360T3E182TC-S	$689	N1S	61	1.15	6.10	86.5	14.764	230/460	9
		3600	182/4TC	005360T3H182TC-S	$689	N1S	61	1.15	4.90	86.5	14.764	575	9
		3600	182/4TC	005360T3V182TC-S	$689	N1S	61	1.15	7.00	86.5	14.764	200/400	9
		1800	182/4TC	005180T3E184TC-S	$668	N1S	88	1.15	6.30	89.5	16.339	230/460	9
		1800	182/4TC	005180T3H184TC-S	$668	N1S	97	1.15	5.10	89.5	16.339	575	9
		1800	182/4TC	005180T3V184TC-S	$668	N1S	97	1.15	7.30	89.5	16.339	200/400	9
		1200	213/5TC	005120T3E215TC-S	$1,108	N1S	135	1.15	6.70	89.5	16.969	230/460	9
		1200	213/5TC	005120T3H215TC-S	$1,108	N1S	135	1.15	5.40	89.5	16.969	575	9
7.5	5.5	3600	182/4TC	007360T3E184TC-S	$958	N1S	76	1.15	8.70	88.5	15.157	230/460	9
		3600	182/4TC	007360T3H184TC-S	$958	N1S	76	1.15	6.90	88.5	15.157	575	9
		1800	213/5TC	007180T3E213TC-S	$961	N1S	125	1.15	9.30	91.0	16.575	230/460	9
		1800	213/5TC	007180T3H213TC-S	$961	N1S	125	1.15	7.40	91.0	16.575	575	9
		1800	213/5TC	007180T3V213TC-S	$961	N1S	125	1.15	10.6	91.0	16.575	200/400	9
		1200	254/6TC	007120T3E254TC-S	$1,535	N1S	209	1.15	10.2	90.2	20.472	230/460	9
		1200	254/6TC	007120T3H254TC-S	$1,535	N1S	209	1.15	8.20	90.2	20.472	575	9
		1200	254TC	007120T3E254TC	$1,535	N1B	247	1.15	9.69	90.2	20.669	230/460	
		1200	254TC	007120T3H254TC	$1,535	N1B	255	1.15	7.75	90.2	20.669	575	
10	7.5	3600	213/5TC	010360T3E213TC-S	$1,132	N1S	126	1.15	12.0	89.5	16.969	230/460	9
		3600	213/5TC	010360T3H213TC-S	$1,132	N1S	126	1.15	9.60	89.5	16.969	575	9
		3600	213/5TC	010360T3V213TC-S	$1,132	N1S	126	1.15	13.8	89.5	16.969	200/400	9
		1800	213/5TC	010180T3E215TC-S	$1,153	N1S	130	1.15	12.4	91.7	16.575	230/460	9
		1800	213/5TC	010180T3H215TC-S	$1,153	N1S	130	1.15	9.90	91.7	16.575	575	9
		1800	213/5TC	010180T3V215TC-S	$1,153	N1S	130	1.15	14.3	91.7	16.575	200/400	9
		1200	254/6TC	010120T3E256TC-S	$1,785	N1S	237	1.15	13.9	91.7	20.472	230/460	9
		1200	254/6TC	010120T3H256TC-S	$1,785	N1S	237	1.15	11.1	91.7	20.472	575	9
		1200	256TC	010120T3E256TC	$1,785	N1B	282	1.15	12.8	91.7	22.401	230/460	
		1200	256TC	010120T3H256TC	$1,785	N1B	276	1.15	10.2	91.7	22.401	575	
15	11	3600	213/5TC	015360T3E215TC-S	$1,543	N1S	141	1.15	17.2	90.2	17.756	230/460	9
		3600	213/5TC	015360T3H215TC-S	$1,543	N1S	141	1.15	13.8	90.2	17.756	575	9
		3600	213/5TC	015360T3V215TC-S	$1,543	N1S	141	1.15	19.8	90.2	17.756	200/400	9
		1800	254/6TC	015180T3E254TC-S	$1,545	N1S	211	1.15	18.6	93.0	20.472	230/460	9
		1800	254/6TC	015180T3H254TC-S	$1,545	N1S	211	1.15	14.9	93.0	20.472	575	9
		1800	254/6TC	015180T3V254TC-S	$1,545	N1S	211	1.15	21.4	93.0	20.472	200/400	9
		1800	254TC	015180T3E254TC	$1,545	N1B	264	1.15	18.6	93.0	20.669	230/460	
		1800	254TC	015180T3H254TC	$1,545	N1B	264	1.15	14.9	93.0	20.669	575	
		1800	254TC	015180T3V254TC	$1,545	N1B	266	1.15	21.4	93.0	20.669	200/400	
		1200	284TC	015120T3E284TC	$2,497	N1B	400	1.15	17.7	91.7	23.386	230/460	
		1200	284TC	015120T3H284TC	$2,497	N1B	400	1.15	14.2	91.7	23.386	575	

continued on next page

Please refer to back cover for description of "NOTES"

For detailed specifications, data sheets, drawings and performance curves visit http://www.weg.net

ODP - C-Face - Foot Mount - *continued*

HP	kW	RPM	Frame	Catalog Number	List Price	Mult. Symbol	Approx. Shipping Weight (lbs)	Service Factor	FL Amps @ High	FL. Eff (%)	"C" Dimension (in)	Voltage (V)	Notes
20	15	3600	254/6TC	02036OT3E254TC-S	$1,828	N1S	187	1.15	23.8	91.0	20.472	230/460	9
		3600	254/6TC	02036OT3H254TC-S	$1,828	N1S	187	1.15	19.0	91.0	20.472	575	9
		3600	254TC	02036OT3E254TC	$1,828	N1B	221	1.15	24.6	91.0	20.669	230/460	
		3600	254TC	02036OT3H254TC	$1,828	N1B	221	1.15	19.7	91.0	20.669	575	
		1800	254/6TC	02018OT3E256TC-S	$1,900	N1S	235	1.15	25.0	93.0	20.472	230/460	9
		1800	254/6TC	02018OT3H256TC-S	$1,900	N1S	235	1.15	20.0	93.0	20.472	575	9
		1800	254/6TC	02018OT3V256TC-S	$1,900	N1S	235	1.15	28.8	93.0	20.472	200/400	9
		1800	256TC	02018OT3E256TC	$1,900	N1B	301	1.15	24.7	93.0	22.401	230/460	
		1800	256TC	02018OT3H256TC	$1,900	N1B	300	1.15	19.8	93.0	22.401	575	
		1800	256TC	02018OT3V256TC	$1,900	N1B	302	1.15	28.4	93.0	22.401	200/400	
		1200	286TC	02012OT3E286TC	$3,119	N1B	422	1.15	24.0	92.4	24.882	230/460	
		1200	286TC	02012OT3H286TC	$3,119	N1B	421	1.15	19.2	92.4	24.882	575	
25	18.5	3600	254/6TC	02536OT3E256TC-S	$2,207	N1S	202	1.15	29.1	91.7	20.472	230/460	9
		3600	254/6TC	02536OT3H256TC-S	$2,207	N1S	202	1.15	23.3	91.7	20.472	575	9
		3600	256TC	02536OT3E256TC	$2,207	N1B	261	1.15	29.8	91.7	22.401	230/460	
		3600	256TC	02536OT3H256TC	$2,207	N1B	262	1.15	23.8	91.7	22.401	575	
		1800	284TC	02518OT3E284TC	$2,245	N1B	387	1.15	29.9	93.6	23.386	230/460	
		1800	284TC	02518OT3H284TC	$2,245	N1B	386	1.15	23.9	93.6	23.386	575	
		1800	284TC	02518OT3V284TC	$2,245	N1B	387	1.15	34.4	93.6	23.386	200/400	
30	22	3600	284TSC	03036OT3E284TSC	$2,572	N1B	358	1.15	34.7	92.4	22.000	230/460	
		3600	284TSC	03036OT3H284TSC	$2,572	N1B	357	1.15	27.8	92.4	22.000	575	
		3600	284TSC	03036OT3V284TSC	$2,572	N1B	358	1.15	39.9	92.4	22.000	200/400	
		1800	286TC	03018OT3E286TC	$2,615	N1B	441	1.15	35.4	94.1	24.882	230/460	
		1800	286TC	03018OT3H286TC	$2,615	N1B	439	1.15	28.3	94.1	24.882	575	
		1800	286TC	03018OT3V286TC	$2,615	N1B	441	1.15	40.7	94.1	24.882	200/400	
		1200	326TC	03012OT3E326TC	$3,990	N1B	577	1.15	36.0	93.6	27.667	230/460	
40	30	3600	286TSC	04036OT3E286TSC	$3,393	N1B	397	1.15	47.1	93.0	23.504	230/460	
		3600	286TSC	04036OT3H286TSC	$3,393	N1B	396	1.15	37.7	93.0	23.504	575	
		1800	324TSC	04018OT3E324TSC	$3,195	N1B	574	1.15	48.2	94.1	24.685	230/460	
		1800	324TC	04018OT3E324TC	$3,195	N1B	518	1.15	48.2	94.1	26.181	230/460	
		1800	324TC	04018OT3H324TC	$3,195	N1B	516	1.15	38.6	94.1	26.181	575	
		1200	364/5TC	04012OT3E364TC	$5,938	N1B	944	1.15	47.1	94.1	29.764	230/460	
50	37	3600	324TSC	05036OT3E324TSC	$3,920	N1B	521	1.15	59.1	93.6	24.685	230/460	
		3600	324TSC	05036OT3H324TSC	$3,920	N1B	521	1.15	47.3	93.6	24.685	575	
		1800	326TSC	05018OT3E326TSC	$3,888	N1B	585	1.15	59.9	94.5	26.181	230/460	
		1800	326TC	05018OT3E326TC	$3,888	N1B	588	1.15	59.9	94.5	27.667	230/460	
		1800	326TC	05018OT3H326TC	$3,888	N1B	585	1.15	47.9	94.5	27.667	575	
		1200	364/5TC	05012OT3E365TC	$6,786	N1B	972	1.15	58.8	94.1	29.764	230/460	
60	45	3600	326TSC	06036OT3E326TSC	$4,681	N1B	560	1.15	71.0	93.6	26.181	230/460	
		1800	364/5TC	06018OT3E364TC	$4,837	N1B	923	1.15	69.9	95.0	29.764	230/460	
		1800	364/5TC	06018OT3H364TC	$4,837	N1B	927	1.15	55.9	95.0	29.764	575	
75	55	3600	364/5TSC	07536OT3E364TSC	$6,193	N1B	878	1.15	83.4	94.1	27.638	230/460	
		1800	364/5TC	07518OT3E365TC	$6,052	N1B	989	1.15	83.5	95.0	29.764	230/460	
		1800	364/5TC	07518OT3H365TC	$6,052	N1B	997	1.15	66.8	95.0	29.764	575	

continued on next page

Please refer to back cover for description of "NOTES"

For detailed specifications, data sheets, drawings and performance curves visit http://www.weg.net

Data subject to change without notice.

ODP - C-Face - Foot Mount - *continued*

HP	kW	RPM	Frame	Catalog Number	List Price	Mult. Symbol	Approx. Shipping Weight (lbs)	Service Factor	FL Amps @ High	FL. Eff (%)	"C" Dimension (in)	Voltage (V)	Notes
100	75	1800	404/5TSC	100180T3E404TSC	$7,587	N1B	1111	1.15	113	95.4	31.141	230/460	
		1800	404/5TSC	100180T3H404TSC	$7,587	N1B	1113	1.15	90.4	95.4	31.141	575	
		1800	404/5TC	100180T3E404TC	$7,587	N1B	1122	1.15	113	95.4	34.133	230/460	
		1800	404/5TC	100180T3H404TC	$7,587	N1B	1123	1.15	90.4	95.4	34.133	575	
125	90	1800	404/5TSC	125180T3E405TSC	$8,427	N1B	1191	1.15	136	95.4	31.141	230/460	
		1800	404/5TSC	125180T3G405TSC	$8,427	N1B	1187	1.15	136	95.4	31.141	460	
		1800	404/5TC	125180T3E405TC	$8,427	N1B	1201	1.15	136	95.4	34.133	230/460	
		1800	404/5TC	125180T3G405TC	$8,427	N1B	1198	1.15	136	95.4	34.133	460	
		1800	404/5TC	125180T3H405TC	$8,427	N1B	1206	1.15	109	95.4	34.133	575	
150	110	3600	404/5TSC	150360T3G405TSC	$11,862	N1B	1153	1.15	162	94.5	31.141	460	
		1800	444/5TSC	150180T3G444TSC	$11,228	N1B	1648	1.15	166	95.8	36.062	460	
		1800	444/5TC	150180T3G444TC	$11,228	N1B	1678	1.15	166	95.8	39.803	460	
		1800	444/5TC	150180T3H444TC	$11,228	N1B	1624	1.15	133	95.8	39.803	575	
200	150	3600	444/5TSC	200360T3G444TSC	$15,064	N1B	1559	1.15	223	95.0	36.062	460	
		1800	444/5TC	200180T3G445TC	$13,564	N1B	1649	1.15	229	95.8	39.803	460	
250	185	3600	444/5TSC	250360T3G445TSC	$19,543	N1B	1666	1.15	272	95.0	36.062	460	
		1800	444/5TC	250180T3G445TC	$16,073	N1B	1765	1.15	275	95.8	39.803	460	

Please refer to back cover for description of "NOTES"

For detailed specifications, data sheets, drawings and performance curves visit http://www.weg.net

ODP - C-Face - Footless

HP	kW	RPM	Frame	Catalog Number	List Price	Mult. Symbol	Approx. Shipping Weight (lbs)	Service Factor	FL Amps @ High	FL. Eff (%)	"C" Dimension (in)	Voltage (V)	Notes
0.25	0.18	1800	56C	.25180T3E56CFL-S	$263	F2B	19	1.35	0.53	66.0	9.921	230/460	9;20
		1800	56C	.25180T3H56CFL-S	$263	F2B	19	1.35	0.42	69.5	9.921	575	9;20
0.33	0.25	3600	56C	.33360T3E56CFL-S	$270	F2B	19	1.35	0.61	69.5	10.315	230/460	9;20
		1800	56C	.33180T3E56CFL-S	$284	F2B	20	1.35	0.67	73.4	10.315	230/460	9;20
		1800	56C	.33180T3H56CFL-S	$284	F2B	20	1.35	0.54	73.4	10.315	575	9;20
0.5	0.37	3600	56C	.50360T3E56CFL-S	$286	F2B	20	1.25	0.81	73.4	10.315	230/460	9;20
		1800	56C	.50180T3E56CFL-S	$324	F2B	24	1.25	0.86	78.2	10.709	230/460	9;20
		1800	56C	.50180T3H56CFL-S	$324	F2B	24	1.25	0.69	78.2	10.709	575	9;20
0.75	0.55	3600	56C	.75360T3E56CFL-S	$333	F2B	22	1.25	1.14	76.8	10.709	230/460	9;20
		1800	56C	.75180T3E56CFL-S	$358	F2B	27	1.25	1.15	81.1	11.102	230/460	9;20
		1800	56C	.75180T3H56CFL-S	$358	F2B	27	1.25	0.92	81.1	11.102	575	9;20
1	0.75	3600	56C	00136OT3E56CFL-S	$383	F2B	23	1.25	1.51	77.0	10.709	230/460	9;20
		1800	56C	00118OT3E56CFL-S	$378	F2B	30	1.15	1.57	83.5	11.495	230/460	9;20
		1800	56C	00118OT3H56CFL-S	$378	F2B	30	1.15	1.26	83.5	11.495	575	9;20
1.5	1.1	3600	56C	00156OT3E56CFL-S	$408	F2B	30	1.15	1.85	84.0	11.889	230/460	9;20
		1800	56C	00158OT3E56CFL-S	$389	F2B	40	1.15	2.10	86.5	12.677	230/460	9;20
		1800	56C	00158OT3H56CFL-S	$389	F2B	40	1.15	1.68	86.5	12.677	575	9;20
2	1.5	3600	56C	00236OT3E56CFL-S	$464	F2B	38	1.15	2.42	85.5	12.677	230/460	9;20
		1800	56C	00218OT3E56CFL-S	$399	F2B	40	1.15	2.69	86.5	12.677	230/460	9;20
		1800	56C	00218OT3H56CFL-S	$399	F2B	40	1.15	2.15	86.5	12.677	575	9;20
3	2.2	3600	56C	00336OT3E56CFL-S	$513	F2B	42	1.15	3.59	85.5	13.070	230/460	9;20

ODP - Resilient Base

HP	kW	RPM	Frame	Catalog Number	List Price	Mult. Symbol	Approx. Shipping Weight (lbs)	Service Factor	FL Amps @ High	FL. Eff (%)	"C" Dimension (in)	Voltage (V)	Notes
0.33	0.25	1800	56	.33180T3ERB56-S	$314	F2B	22	1.35	0.67	73.4	10.827	230/460	9;13
0.5	0.37	1800	56	.50180T3ERB56-S	$354	F2B	25	1.25	0.86	78.2	11.220	230/460	9;13
0.75	0.55	1800	56	.75180T3ERB56-S	$388	F2B	28	1.25	1.15	81.1	11.614	230/460	9;13
1	0.75	1800	56	00118OT3ERB56-S	$408	F2B	31	1.15	1.57	83.5	12.008	230/460	9;13
1.5	1.1	1800	56H	00158OT3ERB56-S	$419	F2B	42	1.15	2.10	86.5	13.189	230/460	9;13

Please refer to back cover for description of "NOTES"

For detailed specifications, data sheets, drawings and performance curves visit http://www.weg.net

Data subject to change without notice.

Three-Phase General Purpose Motors

IEEE 841 - THREE PHASE
TEFC - NEMA Premium®

WEG's IEEE 841 motors are specially suited for Pulp & Paper mills, Steel mills, Petrochemical Plants and diverse demanding applications requiring severe duty long life motors.

WEG's W22 cast iron platform has an improved cooling system and solid feet for cooler operation and reduced vibration and noise extending the life of the motor.

Standard Features:

- Class F insulation (Impregnation Resin and magnet wire are class H)
- F1 Mounted (F2 convertible). Frames 447T and up can easily be F2 converted by simply rotating the terminal box adapter
- Stainless Steel Nameplate - Laser etched with high contrast background
- All frames with regreasable ball bearings
- Class I, Div. 2, Groups A, B, C & D – T3, Class II, Div 2, Groups F & G – T3C

***Inverter Rated:**
1000:1 for variable torque
20:1 for constant torque

** Frame 586/7 250HP and up 6:1 CT and 1000:1 VT*

** Insulated bearing housing on the NDE standard on L447/9T and above*

Features that make a difference:

- 1.25 Service Factor up to 100 HP
- InproSeal Bearing Isolators both ends
- Bearing protection meets IP56
- Rubber lead separator between terminal box and frame
- Vibration: 0.04 inches per second or less
- Guaranteed foot flatness to within 0.005"
- Bearing life 50,000 hours (L-10)
- Epoxy Paint system exceeds 250hrs Salt Spray test
- Interior surfaces are epoxy coated
- Non-sparking fan
- NPT Threaded terminal box
- Seamless copper lead lugs
- Seamless Stainless Steel grease extension tubes
- Automatic grease relief fittings
- IEEE 841 Test Report in conduit box
- Suitable for IEEE45 and USCG 259 – Marine Duty

ADDITIONAL TECHNICAL DATA

ELECTRICAL DATA: B-12

MECHANICAL DATA: B-68

Three-Phase General Purpose Motors

IEEE 841 - Three-Phase

TEFC - Foot Mount

HP	kW	RPM	Frame	Catalog Number	List Price	Mult. Symbol	Approx. Shipping Weight (lbs)	Service Factor	FL Amps @ High	FL. Eff (%)	"C" Dimension (in)	Voltage (V)	Notes
1	0.75	1800	143/5T	00118ST3QIE143T-W22	$922	I1	58	1.25	1.47	85.5	13.358	460	
		1800	143/5T	00118ST3HIE143T-W22	$922	I1	58	1.25	1.18	85.5	13.358	575	
		1200	143/5T	00112ST3QIE145T-W22	$1,062	I1	66	1.25	1.73	82.5	13.358	460	
		1200	143/5T	00112ST3HIE145T-W22	$1,062	I1	66	1.25	1.38	82.5	13.358	575	
		900	182/4T	00109ST3QIE182T-W22	$2,006	I1	97	1.25	2.30	78.5	15.860	460	
1.5	1.1	3600	143/5T	00156ST3QIE143T-W22	$981	I1	59	1.25	1.96	84.0	13.358	460	
		3600	143/5T	00156ST3HIE143T-W22	$981	I1	43	1.25	1.57	84.0	13.358	575	
		1800	143/5T	00158ST3QIE145T-W22	$981	I1	63	1.25	2.02	86.5	13.358	460	
		1800	143/5T	00158ST3HIE145T-W22	$981	I1	63	1.25	1.62	86.5	13.358	575	
		1200	182/4T	00152ST3QIE182T-W22	$1,286	I1	108	1.25	2.54	87.5	15.860	460	
		1200	182/4T	00152ST3HIE182T-W22	$1,286	I1	74	1.25	2.03	87.5	15.860	575	
		900	182/4T	00159ST3QIE184T-W22	$2,016	I1	112	1.25	2.70	82.5	15.860	460	
2	1.5	3600	143/5T	00236ST3QIE145T-W22	$1,023	I1	64	1.25	2.56	85.5	13.358	460	
		3600	143/5T	00236ST3HIE145T-W22	$1,023	I1	64	1.25	2.05	85.5	13.358	575	
		1800	143/5T	00218ST3QIE145T-W22	$1,023	I1	64	1.25	2.76	86.5	13.358	460	
		1800	143/5T	00218ST3HIE145T-W22	$1,023	I1	64	1.25	2.21	86.5	13.358	575	
		1200	182/4T	00212ST3QIE184T-W22	$1,363	I1	113	1.25	3.22	88.5	15.860	460	
		1200	182/4T	00212ST3HIE184T-W22	$1,363	I1	114	1.25	2.58	88.5	15.860	575	39
		900	213/5T	00209ST3QIE213T-W22	$2,701	I1	154	1.25	3.39	85.5	19.517	460	
3	2.2	3600	182/4T	00336ST3QIE182T-W22	$1,267	I1	109	1.25	3.63	86.5	15.860	460	
		3600	182/4T	00336ST3HIE182T-W22	$1,267	I1	108	1.25	2.90	86.5	15.860	575	
		1800	182/4T	00318ST3QIE182T-W22	$1,224	I1	106	1.25	3.91	89.5	15.860	460	
		1800	182/4T	00318ST3HIE182T-W22	$1,224	I1	104	1.25	3.13	89.5	15.860	575	
		1200	213/5T	00312ST3QIE213T-W22	$1,537	I1	173	1.25	4.41	89.5	19.517	460	
		1200	213/5T	00312ST3HIE213T-W22	$1,537	I1	173	1.25	3.53	89.5	19.517	575	
		900	213/5T	00309ST3QIE215T-W22	$2,883	I1	199	1.25	4.55	85.5	19.517	460	
5	3.7	3600	182/4T	00536ST3QIE184T-W22	$1,429	I1	116	1.25	5.90	88.5	15.860	460	
		3600	182/4T	00536ST3HIE184T-W22	$1,429	I1	116	1.25	4.72	88.5	15.860	575	
		1800	182/4T	00518ST3QIE184T-W22	$1,371	I1	115	1.25	6.45	89.5	15.860	460	
		1800	182/4T	00518ST3HIE184T-W22	$1,371	I1	115	1.25	5.16	89.5	15.860	575	
		1200	213/5T	00512ST3QIE215T-W22	$1,901	I1	191	1.25	6.83	89.5	19.517	460	
		1200	213/5T	00512ST3HIE215T-W22	$1,901	I1	191	1.25	5.46	89.5	19.517	575	
		900	254/6T	00509ST3QIE254T-W22	$4,243	I1	306	1.25	7.58	87.5	24.945	460	
7.5	5.5	3600	213/5T	00736ST3QIE213T-W22	$1,751	I1	174	1.25	8.76	89.5	19.517	460	
		3600	213/5T	00736ST3HIE213T-W22	$1,751	I1	173	1.25	7.01	89.5	19.517	575	
		1800	213/5T	00718ST3QIE213T-W22	$1,646	I1	185	1.25	9.18	91.7	19.517	460	
		1800	213/5T	00718ST3HIE213T-W22	$1,646	I1	185	1.25	7.34	91.7	19.517	575	
		1200	254/6T	00712ST3QIE254T-W22	$2,544	I1	322	1.25	9.48	91.0	24.945	460	
		1200	254/6T	00712ST3HIE254T-W22	$2,544	I1	299	1.25	7.58	91.0	24.945	575	
		900	254/6T	00709ST3QIE256T-W22	$5,040	I1	321	1.25	11.1	87.5	24.945	460	

continued on next page

Please refer to back cover for description of "NOTES"

For detailed specifications, data sheets, drawings and performance curves visit http://www.weg.net

Data subject to change without notice.

TEFC - Foot Mount - *continued*

HP	kW	RPM	Frame	Catalog Number	List Price	Mult. Symbol	Approx. Shipping Weight (lbs)	Service Factor	FL Amps @ High	FL. Eff (%)	"C" Dimension (in)	Voltage (V)	Notes
10	7.5	3600	213/5T	01036ST3QIE215T-W22	$1,920	I1	191	1.25	11.6	90.2	19.517	460	
		3600	213/5T	01036ST3HIE215T-W22	$1,920	I1	191	1.25	9.28	90.2	19.517	575	
		1800	213/5T	01018ST3QIE215T-W22	$1,760	I1	188	1.25	12.4	91.7	19.517	460	
		1800	213/5T	01018ST3HIE215T-W22	$1,760	I1	199	1.25	9.92	91.7	19.517	575	
		1200	254/6T	01012ST3QIE256T-W22	$2,834	I1	329	1.25	12.9	91.0	24.945	460	
		1200	254/6T	01012ST3HIE256T-W22	$2,834	I1	329	1.25	10.3	91.0	24.945	575	
		900	284/6T	01009ST3QIE284T-W22	$5,936	I1	380	1.25	13.4	90.2	27.929	460	
15	11	3600	254/6T	01536ST3QIE254T-W22	$2,428	I1	303	1.25	17.2	91.0	24.945	460	
		3600	254/6T	01536ST3HIE254T-W22	$2,428	I1	303	1.25	13.8	91.0	24.945	575	
		1800	254/6T	01518ST3QIE254T-W22	$2,257	I1	341	1.25	18.0	92.4	24.945	460	
		1800	254/6T	01518ST3HIE254T-W22	$2,257	I1	351	1.25	14.4	92.4	24.945	575	
		1200	284/6T	01512ST3QIE284T-W22	$4,203	I1	430	1.25	17.9	91.7	27.929	460	
		1200	284/6T	01512ST3HIE284T-W22	$4,203	I1	425	1.25	14.3	91.7	27.929	575	
		900	284/6T	01509ST3QIE286T-W22	$6,742	I1	437	1.25	19.4	90.2	27.929	460	
20	15	3600	254/6T	02036ST3QIE256T-W22	$2,957	I1	329	1.25	23.2	91.0	24.945	460	
		3600	254/6T	02036ST3HIE256T-W22	$2,957	I1	328	1.25	18.6	91.0	24.945	575	
		1800	254/6T	02018ST3QIE256T-W22	$2,597	I1	385	1.25	24.1	93.0	24.945	460	
		1800	254/6T	02018ST3HIE256T-W22	$2,597	I1	400	1.25	19.3	93.0	24.945	575	
		1200	284/6T	02012ST3QIE286T-W22	$4,773	I1	456	1.25	24.2	91.7	27.929	460	
		1200	284/6T	02012ST3HIE286T-W22	$4,773	I1	456	1.25	19.4	91.7	27.929	575	
		900	324/6T	02009ST3QIE324T-W22	$8,269	I1	551	1.25	28.3	91.0	31.116	460	
25	18.5	3600	284/6TS	02536ST3QIE284TS-W22	$3,368	I1	413	1.25	28.5	91.7	26.557	460	
		3600	284/6TS	02536ST3HIE284TS-W22	$3,368	I1	403	1.25	22.8	91.7	26.557	575	
		1800	284/6T	02518ST3QIE284T-W22	$2,926	I1	448	1.25	29.5	93.6	27.929	460	
		1800	284/6T	02518ST3HIE284T-W22	$2,926	I1	447	1.25	23.6	93.6	27.929	575	
		1200	324/6T	02512ST3QIE324T-W22	$5,211	I1	588	1.25	30.4	93.0	31.116	460	
		1200	324/6T	02512ST3HIE324T-W22	$5,211	I1	587	1.25	24.3	93.0	31.116	575	
		900	324/6T	02509ST3QIE326T-W22	$8,838	I1	596	1.25	35.9	91.0	31.116	460	
30	22	3600	284/6TS	03036ST3QIE286TS-W22	$3,799	I1	433	1.25	33.8	91.7	26.557	460	
		3600	284/6TS	03036ST3HIE286TS-W22	$3,799	I1	433	1.25	27.0	91.7	26.557	575	
		1800	284/6T	03018ST3QIE286T-W22	$3,509	I1	454	1.25	35.1	93.6	27.929	460	
		1800	284/6T	03018ST3HIE286T-W22	$3,509	I1	484	1.25	28.1	93.6	27.929	575	
		1200	324/6T	03012ST3QIE326T-W22	$5,359	I1	633	1.25	35.8	93.0	31.116	460	
		1200	324/6T	03012ST3HIE326T-W22	$5,359	I1	632	1.25	28.6	93.0	31.116	575	
		900	364/5T	03009ST3QIE364T-W22	$13,149	I1	900	1.25	37.0	92.4	34.251	460	
40	30	3600	324/6TS	04036ST3QIE324TS-W22	$5,306	I1	591	1.25	45.8	92.4	29.616	460	
		3600	324/6TS	04036ST3HIE324TS-W22	$5,306	I1	591	1.25	36.6	92.4	29.616	575	
		1800	324/6T	04018ST3QIE324T-W22	$4,692	I1	590	1.25	47.1	94.1	31.116	460	
		1800	324/6T	04018ST3HIE324T-W22	$4,692	I1	617	1.25	37.7	94.1	31.116	575	
		1200	364/5T	04012ST3QIE364T-W22	$8,636	I1	1007	1.25	46.5	94.1	34.251	460	
		1200	364/5T	04012ST3HIE364T-W22	$8,636	I1	1003	1.25	37.2	94.1	34.251	575	
		900	364/5T	04009ST3QIE365T-W22	$14,909	I1	955	1.25	50.3	92.4	34.251	460	

continued on next page

Please refer to back cover for description of "NOTES"

For detailed specifications, data sheets, drawings and performance curves visit http://www.weg.net

Three-Phase General Purpose Motors

IEEE 841 - Three-Phase

TEFC - Foot Mount - *continued*

HP	kW	RPM	Frame	Catalog Number	List Price	Mult. Symbol	Approx. Shipping Weight (lbs)	Service Factor	FL Amps @ High	FL. Eff (%)	"C" Dimension (in)	Voltage (V)	Notes
50	37	3600	324/6TS	05036ST3QIE326TS-W22	$5,970	I1	613	1.25	56.1	93.0	29.616	460	
		3600	324/6TS	05036ST3HIE326TS-W22	$5,970	I1	612	1.25	44.9	93.0	29.616	575	
		1800	324/6T	05018ST3QIE326T-W22	$5,233	I1	610	1.25	59.2	94.5	31.116	460	
		1800	324/6T	05018ST3HIE326T-W22	$5,233	I1	636	1.25	47.4	94.5	31.116	575	
		1200	364/5T	05012ST3QIE365T-W22	$9,369	I1	1022	1.25	57.4	94.1	34.251	460	
		1200	364/5T	05012ST3HIE365T-W22	$9,369	I1	1019	1.25	45.9	94.1	34.251	575	
		900	404/5T	05009ST3QIE404T-W22	$19,331	I1	1214	1.25	60.0	93.0	39.730	460	
60	45	3600	364/5TS	06036ST3QIE364TS-W22	$8,665	I1	965	1.25	67.0	93.6	32.338	460	
		3600	364/5TS	06036ST3HIE364TS-W22	$8,665	I1	963	1.25	53.6	93.6	32.338	575	
		1800	364/5T	06018ST3QIE364T-W22	$8,044	I1	957	1.25	68.3	95.0	34.251	460	
		1800	364/5T	06018ST3HIE364T-W22	$8,044	I1	1030	1.25	54.6	95.0	34.251	575	
		1200	404/5T	06012ST3QIE404T-W22	$11,790	I1	1253	1.25	69.5	94.5	39.730	460	
		1200	404/5T	06012ST3HIE404T-W22	$11,790	I1	1249	1.25	55.6	94.5	39.730	575	
		900	404/5T	06009ST3QIE405T-W22	$22,579	I1	1261	1.25	73.0	93.0	39.730	460	
75	55	3600	364/5TS	07536ST3QIE365TS-W22	$10,210	I1	1012	1.25	81.9	93.6	32.338	460	
		3600	364/5TS	07536ST3HIE365TS-W22	$10,210	I1	972	1.25	65.5	93.6	32.338	575	
		1800	364/5T	07518ST3QIE365T-W22	$9,289	I1	996	1.25	84.1	95.4	34.251	460	
		1800	364/5T	07518ST3HIE365T-W22	$9,289	I1	1045	1.25	67.3	95.4	34.251	575	
		1200	404/5T	07512ST3QIE405T-W22	$12,866	I1	1317	1.25	84.9	94.5	39.730	460	
		1200	404/5T	07512ST3QIERB405T-W2	$12,866	I1	1326	1.25	84.9	94.5	39.730	460	14
		1200	404/5T	07512ST3HIE405T-W22	$12,866	I1	1298	1.25	67.9	94.5	39.730	575	
		900	444/5T	07509ST3QIE444T-W22	$23,457	I1	1666	1.25	93.0	93.6	44.950	460	
100	75	3600	404/5TS	10036ST3QIE405TS-W22	$12,806	I1	1182	1.25	110	94.1	36.732	460	
		3600	404/5TS	10036ST3HIE405TS-W22	$12,806	I1	1191	1.25	88.0	94.1	36.732	575	
		1800	404/5T	10018ST3QIE405T-W22	$12,471	I1	1276	1.25	116	95.4	39.730	460	
		1800	404/5T	10018ST3QIERB405T-W2	$12,471	I1	1292	1.25	116	95.4	39.730	460	14
		1800	404/5T	10018ST3HIE405T-W22	$12,471	I1	1339	1.25	92.8	95.4	39.730	575	
		1800	404/5T	10018ST3HIERB405T-W2	$12,471	I1	1348	1.25	92.8	95.4	39.730	575	14
		1200	444/5T	10012ST3QIE444T-W22	$17,933	I1	1800	1.25	121	95.0	44.950	460	
		1200	444/5T	10012ST3QIERB444T-W2	$17,933	I1	1915	1.25	121	95.0	44.950	460	14
		1200	444/5T	10012ST3HIE444T-W22	$17,933	I1	1900	1.25	96.8	95.0	44.950	575	
		900	444/5T	10009ST3QIE445T-W22	$24,681	I1	1944	1.25	127	94.1	44.950	460	
		900	444/5T	10009ST3QIERB445T-W2	$24,681	I1	1763	1.25	127	94.1	44.950	460	14
125	90	3600	444/5TS	12536ST3QIE444TS-W22	$18,198	I1	1805	1.15	134	95.0	41.200	460	
		3600	444/5TS	12536ST3HIE444TS-W22	$18,198	I1	1796	1.15	107	95.0	41.200	575	
		1800	444/5T	12518ST3QIE444T-W22	$16,564	I1	1708	1.15	139	95.4	44.950	460	
		1800	444/5T	12518ST3QIERB444T-W2	$16,564	I1	1836	1.15	139	95.4	44.950	460	14
		1800	444/5T	12518ST3HIE444T-W22	$16,564	I1	1822	1.15	111	95.4	44.950	575	
		1200	444/5T	12512ST3QIE445T-W22	$20,158	I1	2016	1.15	143	95.0	44.950	460	
		1200	444/5T	12512ST3QIERB445T-W2	$20,158	I1	2028	1.15	143	95.0	44.950	460	14
		1200	444/5T	12512ST3HIE445T-W22	$20,158	I1	2013	1.15	114	95.0	44.950	575	
		900	445/7T	12509ST3QIE447T-W22	$29,733	I1	2239	1.15	151	94.5	48.701	460	
		900	445/7T	12509ST3QIERB447T-W2	$29,733	I1	2273	1.15	151	94.5	48.701	460	14

continued on next page

Please refer to back cover for description of "NOTES"

For detailed specifications, data sheets, drawings and performance curves visit http://www.weg.net

Data subject to change without notice.

TEFC - Foot Mount - *continued*

HP	kW	RPM	Frame	Catalog Number	List Price	Mult. Symbol	Approx. Shipping Weight (lbs)	Service Factor	FL Amps @ High	FL. Eff (%)	"C" Dimension (in)	Voltage (V)	Notes
150	110	3600	444/5TS	15036ST3QIE445TS-W22	$21,433	I1	1900	1.15	161	95.0	41.200	460	
		3600	444/5TS	15036ST3HIE445TS-W22	$21,433	I1	1908	1.15	129	95.0	41.200	575	
		1800	444/5T	15018ST3QIE445T-W22	$18,587	I1	1910	1.15	170	95.8	44.950	460	
		1800	444/5T	15018ST3QIERB445T-W2	$18,587	I1	2041	1.15	170	95.8	44.950	460	14
		1800	444/5T	15018ST3HIE445T-W22	$18,587	I1	2027	1.15	136	95.8	44.950	575	
		1800	444/5T	15018ST3HIERB445T-W2	$18,587	I1	2038	1.15	136	95.8	44.950	575	14
		1200	445/7T	15012ST3QIE447T-W22	$23,181	I1	2511	1.15	176	95.8	48.701	460	
		1200	445/7T	15012ST3QIERB447T-W2	$23,181	I1	2543	1.15	176	95.8	48.701	460	14
		1200	445/7T	15012ST3HIE447T-W22	$23,181	I1	2531	1.15	141	95.8	48.701	575	
		900	445/7T	15009ST3QIE447T-W22	$34,755	I1	2409	1.15	185	94.5	48.701	460	
		900	445/7T	15009ST3QIERB447T-W2	$34,755	I1	2421	1.15	185	94.5	48.701	460	14
200	150	3600	445/7TS	20036ST3QIE447TS-W22	$28,568	I1	2240	1.15	219	95.4	44.951	460	
		3600	445/7TS	20036ST3HIE447TS-W22	$28,568	I1	2209	1.15	175	95.4	44.951	575	
		1800	445/7T	20018ST3QIE447T-W22	$23,696	I1	2320	1.15	230	96.2	48.701	460	
		1800	445/7T	20018ST3QIERB447T-W2	$23,696	I1	2520	1.15	230	96.2	48.701	460	14
		1800	445/7T	20018ST3HIE447T-W22	$23,696	I1	2502	1.15	184	96.2	48.701	575	
		1200	447/9T	20012ST3QIE449T-W22	$27,577	I1	2978	1.15	237	95.8	56.338	460	
		1200	447/9T	20012ST3QIERB449T-W2	$27,557	I1	3052	1.15	237	95.8	56.338	460	14
		1200	447/9T	20012ST3HIE449T-W22	$27,577	I1	3030	1.15	190	95.8	56.338	575	
		1200	447/9T	20012ST3HIERB449T-W2	$27,557	I1	3046	1.15	190	95.8	56.338	575	14
		900	L447/9T	20009ST3QIE449T-W22	$57,394	I1	3655	1.15	242	95.0	57.181	460	43
		900	L447/9T	20009ST3QIERB449T-W2	$57,394	I1	3669	1.15	242	95.0	57.181	460	14;43
		900	L447/9T	20009ST3HIE449T-W22	$57,394	I1	3569	1.15	194	95.0	57.181	575	43
250	185	3600	447/9TS	25036ST3QIE449TS-W22	$34,663	I1	2603	1.15	266	95.8	52.940	460	
		1800	447/9T	25018ST3QIE449T-W22	$30,081	I1	2904	1.15	281	96.2	56.338	460	
		1800	447/9T	25018ST3QIERB449T-W2	$30,081	I1	2869	1.15	281	96.2	56.338	460	14
		1200	447/9T	25012ST3QIE449T-W22	$39,415	I1	3190	1.15	292	95.8	56.338	460	
		1200	447/9T	25012ST3QIERB449T-W2	$39,415	I1	2702	1.15	292	95.8	56.338	460	14
300	220	1800	447/9T	30018ST3QIE449T-W22	$36,810	I1	3102	1.15	330	96.2	56.338	460	
		1800	447/9T	30018ST3QIERB449T-W2	$36,810	I1	3130	1.15	330	96.2	56.338	460	14
		1200	L447/9T	30012ST3QIE449T-W22	$44,648	I1	3645	1.15	351	95.8	57.181	460	43
		1200	L447/9T	30012ST3QIERB449T-W2	$44,648	I1	3571	1.15	351	95.8	57.181	460	14;43
350	260	1800	L447/9T	35018ST3QIE449T-W22	$44,105	I1	3580	1.15	394	96.2	57.181	460	43
		1800	L447/9T	35018ST3QIERB449T-W2	$44,105	I1	3580	1.15	394	96.2	57.181	460	14;43
		1200	L447/9T	35012ST3QIE449T-W22	$52,634	I1	3824	1.15	415	95.8	57.181	460	43, 37
		1200	L447/9T	35012ST3QIERB449T-W2	$52,634	I1	3756	1.15	415	95.8	57.181	460	14;43
400	300	1800	L447/9T	40018ST3QIE449T-W22	$48,396	I1	3467	1.15	455	96.2	57.181	460	43
		1800	L447/9T	40018ST3QIERB449T-W2	$48,396	I1	3467	1.15	455	96.2	57.181	460	14;43

Please refer to back cover for description of "NOTES"

For detailed specifications, data sheets, drawings and performance curves visit http://www.weg.net

Three-Phase General Purpose Motors

IEEE 841 - Three-Phase

TEFC - C-Face - Foot Mount

HP	kW	RPM	Frame	Catalog Number	List Price	Mult. Symbol	Approx. Shipping Weight (lbs)	Service Factor	FL Amps @ High	FL. Eff (%)	"C" Dimension (in)	Voltage (V)	Notes
1	0.75	1800	143/5TC	00118ST3QIE143TC-W22	$972	I1	55	1.25	1.47	85.5	13.358	460	
		1200	143/5TC	00112ST3QIE145TC-W22	$1,112	I1	63	1.25	1.73	82.5	13.358	460	
1.5	1.1	3600	143/5TC	00156ST3QIE143TC-W22	$1,031	I1	57	1.25	1.96	84.0	13.358	460	
		1800	143/5TC	00158ST3QIE145TC-W22	$1,031	I1	61	1.25	2.02	86.5	13.358	460	
		1200	182/4TC	00152ST3QIE182TC-W22	$1,351	I1	112	1.25	2.54	87.5	15.860	460	
		900	182/4TC	00159ST3QIE184TC-W22	$2,081	I1	116	1.25	2.70	82.5	15.860	460	
2	1.5	3600	143/5TC	00236ST3QIE145TC-W22	$1,073	I1	62	1.25	2.56	85.5	13.358	460	
		1800	143/5TC	00218ST3QIE145TC-W22	$1,073	I1	62	1.25	2.76	86.5	13.358	460	
		1200	182/4TC	00212ST3QIE184TC-W22	$1,428	I1	117	1.25	3.22	88.5	15.860	460	39
		900	213/5TC	00209ST3QIE213TC-W22	$2,781	I1	185	1.25	3.39	85.5	19.517	460	
3	2.2	3600	182/4TC	00336ST3QIE182TC-W22	$1,332	I1	113	1.25	3.63	86.5	15.860	460	
		1800	182/4TC	00318ST3QIE182TC-W22	$1,289	I1	109	1.25	3.91	89.5	15.860	460	
		1200	213/5TC	00312ST3QIE213TC-W22	$1,617	I1	178	1.25	4.41	89.5	19.517	460	
		900	213/5TC	00309ST3QIE215TC-W22	$2,963	I1	181	1.25	4.55	85.5	19.517	460	
5	3.7	3600	182/4TC	00536ST3QIE184TC-W22	$1,494	I1	120	1.25	5.90	88.5	15.860	460	
		1800	182/4TC	00518ST3QIE184TC-W22	$1,436	I1	119	1.25	6.45	89.5	15.860	460	
		1200	213/5TC	00512ST3QIE215TC-W22	$1,981	I1	194	1.25	6.83	89.5	19.517	460	
		900	254/6TC	00509ST3QIE254TC-W22	$4,363	I1	309	1.25	7.58	87.5	24.945	460	
7.5	5.5	3600	213/5TC	00736ST3QIE213TC-W22	$1,831	I1	177	1.25	8.76	89.5	19.517	460	
		1800	213/5TC	00718ST3QIE213TC-W22	$1,726	I1	189	1.25	9.18	91.7	19.517	460	
		1200	254/6TC	00712ST3QIE254TC-W22	$2,664	I1	325	1.25	9.48	91.0	24.945	460	
		900	254/6TC	00709ST3QIE256TC-W22	$5,160	I1	321	1.25	11.1	87.5	24.945	460	
10	7.5	3600	213/5TC	01036ST3QIE215TC-W22	$2,000	I1	195	1.25	11.6	90.2	19.517	460	
		1800	213/5TC	01018ST3QIE215TC-W22	$1,840	I1	203	1.25	12.4	91.7	19.517	460	
		1200	254/6TC	01012ST3QIE256TC-W22	$2,954	I1	340	1.25	12.9	91.0	24.945	460	
		900	284/6TC	01009ST3QIE284TC-W22	$6,136	I1	400	1.25	13.4	90.2	27.929	460	
15	11	3600	254/6TC	01536ST3QIE254TC-W22	$2,548	I1	306	1.25	17.2	91.0	24.945	460	
		1800	254/6TC	01518ST3QIE254TC-W22	$2,377	I1	355	1.25	18.0	92.4	24.945	460	
		1200	284/6TC	01512ST3QIE284TC-W22	$4,403	I1	434	1.25	17.9	91.7	27.929	460	
		900	284/6TC	01509ST3QIE286TC-W22	$6,942	I1	444	1.25	19.4	90.2	27.929	460	
20	15	3600	254/6TC	02036ST3QIE256TC-W22	$3,077	I1	332	1.25	23.2	91.0	24.945	460	
		1800	254/6TC	02018ST3QIE256TC-W22	$2,717	I1	404	1.25	24.1	93.0	24.945	460	
		1200	284/6TC	02012ST3QIE286TC-W22	$4,973	I1	465	1.25	24.2	91.7	27.929	460	
		900	324/6TC	02009ST3QIE324TC-W22	$8,494	I1	482	1.25	28.3	91.0	31.116	460	
25	18.5	3600	284/6TSC	02536ST3QIE284TSC-W2	$3,568	I1	389	1.25	28.5	91.7	26.557	460	
		1800	284/6TC	02518ST3QIE284TC-W22	$3,126	I1	456	1.25	29.5	93.6	27.929	460	
		1200	324/6TC	02512ST3QIE324TC-W22	$5,436	I1	603	1.25	30.4	93.0	31.116	460	
		900	324/6TC	02509ST3QIE326TC-W22	$9,063	I1	539	1.25	35.9	91.0	31.116	460	
30	22	3600	284/6TSC	03036ST3QIE286TSC-W2	$3,999	I1	441	1.25	33.8	91.7	26.557	460	
		1800	284/6TC	03018ST3QIE286TC-W22	$3,709	I1	493	1.25	35.1	93.6	27.929	460	
		1200	324/6TC	03012ST3QIE326TC-W22	$5,584	I1	646	1.25	35.8	93.0	31.116	460	
		900	364/5TC	03009ST3QIE364TC-W22	$13,524	I1	917	1.25	37.0	92.4	34.251	460	

continued on next page

Please refer to back cover for description of "NOTES"

For detailed specifications, data sheets, drawings and performance curves visit http://www.weg.net

Data subject to change without notice.

TEFC - C-Face - Foot Mount - *continued*

HP	kW	RPM	Frame	Catalog Number	List Price	Mult. Symbol	Approx. Shipping Weight (lbs)	Service Factor	FL Amps @ High	FL. Eff (%)	"C" Dimension (in)	Voltage (V)	Notes
40	30	3600	324/6TSC	04036ST3QIE324TSC-W2	$5,531	I1	602	1.25	45.8	92.4	29.616	460	
		1800	324/6TC	04018ST3QIE324TC-W22	$4,917	I1	633	1.25	47.1	94.1	31.116	460	
		1200	364/5TC	04012ST3QIE364TC-W22	$9,011	I1	1032	1.25	46.5	94.1	34.251	460	
		900	364/5TC	04009ST3QIE365TC-W22	$15,284	I1	990	1.25	50.3	92.4	34.251	460	
50	37	3600	324/6TSC	05036ST3QIE326TSC-W2	$6,195	I1	627	1.25	56.1	93.0	29.616	460	
		1800	324/6TC	05018ST3QIE326TC-W22	$5,458	I1	651	1.25	59.2	94.5	31.116	460	
		1200	364/5TC	05012ST3QIE365TC-W22	$9,744	I1	983	1.25	57.4	94.1	34.251	460	
		900	404/5TC	05009ST3QIE404TC-W22	$19,856	I1	1132	1.25	60.0	93.0	39.730	460	
60	45	1200	404/5TC	06012ST3QIE404TC-W22	$12,315	I1	1156	1.25	69.5	94.5	39.730	460	

TEFC - C-Face - Footless

HP	kW	RPM	Frame	Catalog Number	List Price	Mult. Symbol	Approx. Shipping Weight (lbs)	Service Factor	FL Amps @ High	FL. Eff (%)	"C" Dimension (in)	Voltage (V)	Notes
1	0.75	1800	143/5TC	00118ST3QIER143TC-W2	$1,000	I1	54	1.25	1.47	85.5	14.066	460	15
1.5	1.1	1800	143/5TC	00158ST3QIER145TC-W2	$1,061	I1	62	1.25	2.02	86.5	14.066	460	15
2	1.5	1800	143/5TC	00218ST3QIER145TC-W2	$1,104	I1	63	1.25	2.76	86.5	14.066	460	15
3	2.2	1800	182/4TC	00318ST3QIER182TC-W2	$1,326	I1	110	1.25	3.91	89.5	17.080	460	15;39
5	3.7	1800	182/4TC	00518ST3QIER184TC-W2	$1,478	I1	119	1.25	6.45	89.5	17.080	460	15
7.5	5.5	1800	213/5TC	00718ST3QIER213TC-W2	$1,776	I1	177	1.25	9.18	91.7	21.269	460	15
10	7.5	1800	213/5TC	01018ST3QIER215TC-W2	$1,893	I1	192	1.25	12.4	91.7	21.269	460	15

Please refer to back cover for description of "NOTES"

For detailed specifications, data sheets, drawings and performance curves visit http://www.weg.net

Three-Phase General Purpose Motors

BRAKE MOTORS

TEFC - Three-Phase - NEMA Premium®

WEG W22 brake motors consist of an induction motor coupled to a disc brake. Brake is of sturdy construction with few moving parts which guarantees long durability and minimum maintenance.

Standard Features:

- Class F insulation (Impregnation Resin and Magnet wire are class H)
- F1 Mounted
- Stainless Steel Nameplate - Laser etched with high contrast background
- Regreasable ball bearings (Frames 254T and up)
- 60HZ - 50HZ available with custom build

Note 1: If separate power supply to the Brake is required, (Such as on Motors operating with Variable Frequency Drive); 230V to the Brake module is mandatory, unless motor model contains "Q" (ex. 00118EP3EBMQ143T). For "Q" models, the input voltage to the Brake module is 460V AC.
Available as stock mod.

Features that make a difference:

- 1.25 Service Factor
- NPT Threaded terminal box
- Armature type brake
- Manual Release

Inverter Rated: [1]
1000:1 for variable torque
20:1 for constant torque

Brake Torques

Frame	N.m	lb.ft	Optional lb.ft
143/5T	16	12	17
182/4T	60	44	N/A
213/5T	125	59	92
254/6T	235	111	173
284/6T	400	192	254

TEFC - Foot Mount

HP	kW	RPM	Frame	Catalog Number	List Price	Mult. Symbol	Approx. Shipping Weight (lbs)	Service Factor	FL Amps @ High	FL. Eff (%)	"C" Dimension (in)	Voltage (V)	Notes
1	0.75	1800	143/5T	00118ET3EBM143T-W22	$1,494	B1	59	1.25	1.47	85.5	16.231	230/460	25
		1800	143/5T	00118ET3EBMQ143T-W22	$1,654	B1	59	1.25	1.47	85.5	16.231	230/460	24;26
		1800	143/5T	00118ET3HBM143T-W22	$1,494	B1	62	1.25	1.18	85.5	16.231	575	25
		1200	143/5T	00112ET3EBM145T-W22	$1,587	B1	66	1.25	1.73	82.5	16.231	230/460	25
		900	182/4T	00109ET3EBM182T-W22	$2,594	B1	126	1.25	2.30	78.5	19.314	230/460	25
1.5	1.1	3600	143/5T	00156ET3EBM143T-W22	$1,501	B1	73	1.25	1.96	84.0	16.231	230/460	25
		1800	143/5T	00158ET3EBM145T-W22	$1,569	B1	65	1.25	2.02	86.5	16.231	230/460	25
		1800	143/5T	00158ET3EBMQ145T-W22	$1,729	B1	70	1.25	2.02	86.5	16.231	230/460	24;26
		1200	182/4T	00152ET3EBM182T-W22	$2,264	B1	117	1.25	2.54	87.5	19.314	230/460	25
		900	182/4T	00159ET3EBM184T-W22	$2,703	B1	156	1.25	2.70	82.5	19.314	230/460	25
2	1.5	3600	143/5T	00236ET3EBM145T-W22	$1,501	B1	62	1.25	2.56	85.5	16.231	230/460	25
		1800	143/5T	00218ET3EBM145T-W22	$1,594	B1	66	1.25	2.76	86.5	16.231	230/460	25
		1800	143/5T	00218ET3EBMQ145T-W22	$1,754	B1	72	1.25	2.76	86.5	16.231	230/460	24;26
		1200	182/4T	00212ET3EBM184T-W22	$2,369	B1	122	1.25	3.23	88.5	19.314	230/460	25
		900	213/5T	00209ET3EBM213T-W22	$3,345	B1	217	1.25	3.39	85.5	23.188	230/460	25
3	2.2	3600	182/4T	00336ET3EBM182T-W22	$2,290	B1	140	1.25	3.63	86.5	19.314	230/460	25
		1800	182/4T	00318ET3EBM182T-W22	$2,052	B1	115	1.25	3.91	89.5	19.314	230/460	25
		1800	182/4T	00318ET3EBMQ182T-W22	$2,212	B1	130	1.25	3.91	89.5	19.314	230/460	24;26
		1200	213/5T	00312ET3EBM213T-W22	$3,220	B1	196	1.25	4.41	89.5	23.188	230/460	25
		900	213/5T	00309ET3EBM215T-W22	$3,740	B1	259	1.25	4.55	85.5	23.188	230/460	25
5	3.7	3600	182/4T	00536ET3EBM184T-W22	$2,343	B1	126	1.25	5.90	88.5	19.314	230/460	25
		1800	182/4T	00518ET3EBM184T-W22	$2,291	B1	124	1.25	6.45	89.5	19.314	230/460	25
		1800	182/4T	00518ET3EBMQ184T-W22	$2,451	B1	136	1.25	6.45	89.5	19.314	230/460	24;26
		1800	182/4T	00518ET3HBM184T-W22	$2,291	B1	124	1.25	5.16	89.5	19.314	575	25
		1200	213/5T	00512ET3EBM215T-W22	$3,406	B1	213	1.25	6.83	89.5	23.188	230/460	25
		900	254/6T	00509ET3EBM254T-W22	$5,641	B1	358	1.25	7.58	87.5	29.839	230/460	25
		900	254/6T	00509ET3EBMQ254T-W22	$5,801	B1	354	1.25	7.58	87.5	29.839	230/460	24;26
7.5	5.5	3600	213/5T	00736ET3EBM213T-W22	$3,002	B1	200	1.25	8.76	89.5	23.188	230/460	25
		1800	213/5T	00718ET3EBM213T-W22	$2,903	B1	215	1.25	9.18	91.7	23.188	230/460	25
		1200	254/6T	00712ET3EBM254T-W22	$5,172	B1	377	1.25	9.48	91.0	29.839	230/460	25
		900	254/6T	00709ET3EBM256T-W22	$6,415	B1	377	1.25	11.1	87.5	29.839	230/460	25
10	7.5	3600	213/5T	01036ET3EBM215T-W22	$3,492	B1	238	1.25	11.6	90.2	23.188	230/460	25
		1800	213/5T	01018ET3EBM215T-W22	$3,474	B1	221	1.25	12.4	91.7	23.188	230/460	25
		1800	213/5T	01018ET3HBM215T-W22	$3,474	B1	200	1.25	9.92	91.7	23.188	575	25
		1200	254/6T	01012ET3EBM256T-W22	$5,759	B1	367	1.25	12.9	91.0	29.839	230/460	25
15	11	3600	254/6T	01536ET3EBM254T-W22	$4,745	B1	384	1.25	17.2	91.0	29.839	230/460	25
		1800	254/6T	01518ET3EBM254T-W22	$5,205	B1	407	1.25	18.0	92.4	29.839	230/460	25
		1800	254/6T	01518ET3EBMQ254T-W22	$5,365	B1	407	1.25	18.0	92.4	29.839	230/460	24;26
		1800	254/6T	01518ET3HBM254T-W22	$5,205	B1	369	1.25	14.4	92.4	29.839	575	25
20	15	3600	254/6T	02036ET3EBM256T-W22	$5,768	B1	424	1.25	23.2	91.0	29.839	230/460	25
		1800	254/6T	02018ET3EBM256T-W22	$5,771	B1	456	1.25	24.1	93.0	29.839	230/460	25
25	18.5	1800	284/6T	02518ET3EBM284T-W22	$6,796	B1	520	1.25	29.5	93.6	32.976	230/460	25
30	22	1800	284/6T	03018ET3EBM286T-W22	$7,276	B1	558	1.25	35.1	93.6	32.976	230/460	25

Please refer to back cover for description of "NOTES"

For detailed specifications, data sheets, drawings and performance curves visit http://www.weg.net

Three-Phase General Purpose Motors

BRAKE MOTORS

TEFC - C-Face - Foot Mount

HP	kW	RPM	Frame	Catalog Number	List Price	Mult. Symbol	Approx. Shipping Weight (lbs)	Service Factor	FL Amps @ High	FL. Eff (%)	"C" Dimension (in)	Voltage (V)	Notes
1	0.75	1800	143/5TC	00118ET3EBMQ143TC-W2	**$1,682**	B1	61	1.25	1.47	85.5	16.231	230/460	24;26
1.5	1.1	1800	143/5TC	00158ET3EBMQ145TC-W2	**$1,757**	B1	70	1.25	2.02	86.5	16.231	230/460	24;26
2	1.5	1800	143/5TC	00218ET3EBMQ145TC-W2	**$1,782**	B1	72	1.25	2.76	86.5	16.231	230/460	24;26
3	2.2	1800	182/4TC	00318ET3EBMQ182TC-W2	**$2,250**	B1	119	1.25	3.91	89.5	19.314	230/460	24;26
5	3.7	1800	182/4TC	00518ET3EBMQ184TC-W2	**$2,489**	B1	136	1.25	6.45	89.5	19.314	230/460	24;26

Please refer to back cover for description of "NOTES"

For detailed specifications, data sheets, drawings and performance curves visit http:// www.weg.net

Data subject to change without notice.

Spring-Set brake (Solenoid Actuated)

Features:

- 1.15 Service Factor
- Manual Release Lever
- AC brake
- Inverter Rated
- IP55 Enclosure
- Dual Frequency (50/60 Hz)

Applications:

- Conveyors
- Door Operators
- Packaging Equipment
- Unit Handling

TEFC - Foot Mount

HP	kW	RPM	Frame	atalog Number	List Prie	Mult Symbol	Approx. Shipping Weight (lbs)	Brake Torque (ft.lb)	FL. Amps @ High	FL. Eff (%)	"C" Dimension (in)	Volts	Notes
0.25	0.18	1800	W56	.2518ES3EBMW56-S	$928	RSB	24	3	0.50	66.0	14.610	208-230/460	9
0.33	0.25	1800	W56	.3318ES3EBMW56-S	$977	RSB	26	3	0.66	68.0	14.610	208-230/460	9
0.5	0.37	1800	W56	.5018ES3EBMW56-S	$1,105	RSB	27	3	1.00	72.0	15.004	208-230/460	9
0.75	0.55	1800	W56	.7518ES3EBMW56-S	$1,301	RSB	38	6	1.22	75.5	15.397	208-230/460	9
1	0.75	1800	56	00118ET3EBM56-S	$1,504	RSB	54	6	1.47	85.5	17.835	230/460	9
		1800	143T	00118ET3EBM143T-S	$1,729	RSB	55	6	1.47	85.5	17.914	230/460	9
1.5	1.1	1800	145T	00158ET3EBM145T-S	$1,866	RSB	56	10	2.02	86.5	17.914	230/460	9
2	1.5	1800	145T	00218ET3EBM145T-S	$1,921	RSB	60	10	2.72	86.5	18.307	230/460	9
3	2.2	1800	182T	00318ET3EBM182T-S	$2,117	RSB	113	15	3.81	89.5	22.992	230/460	9
5	3.7	1800	184T	00518ET3EBM184T-S	$2,492	RSB	91	25	6.49	89.5	22.992	230/460	9
7.5	5.5	1800	213T	00718ET3EBM213T-S	$4,563	RSB	151	35	9.07	91.7	26.457	230/460	9
10	7.5	1800	215T	01018ET3EBM215T-S	$4,989	RSB	165	50	12.2	91.7	26.850	230/460	9
15	11	1800	254T	01518ET3EBM254T-S	$6,985	RSB	256	75	18.2	92.4	31.220	230/460	9
20	15	1800	256T	02018ET3EBM256T-S	$9,080	RSB	291	100	24.7	93.0	32.007	230/460	9

Please refer to back cover for description of "NOTES"

For detailed specifications, data sheets, drawings and performance curves visit http://www.weg.net

Three-Phase General Purpose Motors

BRAKE MOTORS

TEFC - C-Face - Foot Mount

HP	kW	RPM	Frame	Catalog Number	List Price	Mult Symbol	Approx. Shipping Weight (lbs)	Brake Torque (ft.lb)	FL. Amps @ High	FL. Eff (%)	"C" Dimension (in)	Volts	Notes
1	0.75	1800	56C	00118ET3EBM56C-S	$1,542	RSB	54	6	1.47	85.5	17.835	230/460	9
		1800	143TC	00118ET3EBM143TC-S	$1,767	RSB	55	6	1.47	85.5	17.914	230/460	9
1.5	1.1	1800	145TC	00158ET3EBM145TC-S	$1,904	RSB	56	10	2.02	86.5	17.914	230/460	9
2	1.5	1800	145TC	00218ET3EBM145TC-S	$1,959	RSB	60	10	2.72	86.5	18.307	230/460	9
3	2.2	1800	182TC	00318ET3EBM182TC-S	$2,189	RSB	113	15	3.81	89.5	22.992	230/460	9
5	3.7	1800	184TC	00518ET3EBM184TC-S	$2,564	RSB	91	25	6.49	89.5	22.992	230/460	9
7.5	5.5	1800	213TC	00718ET3EBM213TC-S	$4,702	RSB	151	35	9.07	91.7	26.457	230/460	9
10	7.5	1800	215TC	01018ET3EBM215TC-S	$5,128	RSB	165	50	12.2	91.7	26.850	230/460	9

TEFC - C-Face - Footless

HP	kW	RPM	Frame	Catalog Number	List Price	Mult Symbol	Approx. Shipping Weight (lbs)	Brake Torque (ft.lb)	FL. Amps @ High	FL. Eff (%)	"C" Dimension (in)	Volts	Notes
0.25	0.18	1800	W56C	.2518ES3EBMW56CFL-S	$966	RSB	24	3	0.50	66.0	14.610	208-230/460	9
0.33	0.25	1800	W56C	.3318ES3EBMW56CFL-S	$1,015	RSB	26	3	0.66	68.0	14.610	208-230/460	9
0.5	0.37	1800	W56C	.5018ES3EBMW56CFL-S	$1,143	RSB	27	3	1.00	72.0	15.004	208-230/460	9
0.75	0.55	1800	W56C	.7518ES3EBMW56CFL-S	$1,339	RSB	38	6	1.22	75.5	15.397	208-230/460	9
1	0.75	1800	56C	00118ET3EBM56CFL-S	$1,542	RSB	54	6	1.47	85.5	17.835	230/460	9
		1800	143TC	00118ET3EBMR143TC-S	$1,767	RSB	55	6	1.47	85.5	17.914	230/460	9
1.5	1.1	1800	145TC	00158ET3EBMR145TC-S	$1,904	RSB	56	10	2.02	86.5	17.914	230/460	9
2	1.5	1800	145TC	00218ET3EBMR145TC-S	$1,959	RSB	60	10	2.72	86.5	18.307	230/460	9
3	2.2	1800	182TC	00318ET3EBMR182TC-S	$2,189	RSB	113	15	3.81	89.5	22.992	230/460	9
5	3.7	1800	184TC	00518ET3EBMR184TC-S	$2,564	RSB	91	25	6.49	89.5	22.992	230/460	9
7.5	5.5	1800	213TC	00718ET3EBMR213TC-S	$4,702	RSB	151	35	9.07	91.7	26.457	230/460	9
10	7.5	1800	215TC	01018ET3EBMR215TC-S	$5,128	RSB	165	50	12.2	91.7	26.850	230/460	9

Please refer to back cover for description of "NOTES"

For detailed specifications, data sheets, drawings and performance curves visit http:// www.weg.net

Data subject to change without notice.

Motors | Automation | Energy | Transmission & Distribution | Coatings

Global presence means:
We are there.
Global service means:
We are there for you.

WEG is known for its global sales and service capabilities which allow us to provide custom solutions all over the world. With a full range of IEC/NEMA Global Certifications and a full-line of low, medium, and high voltage motors, WEG can supply the right motor for your needs anywhere in the world. To learn more about our global certifications and solutions or to locate a U.S. Distributor near you, call 1-800-ASK-4WEG.

Transforming energy into solutions. www.weg.net

Three-Phase General Purpose Motors

IEC TRU-METRIC™ - Three Phase

W22 Cast Iron

Aluminum

TEFC

This line is designed and built according to European IEC34 and IEC79 standards.

Standard Features:

- 60 Hz (1.15 Service Factor) and 50 Hz (1.0 Service Factor)
- Class F insulation (Impregnation Resin and Magnet wire are class H)
- F2 mounted as standard (F1 convertible)
- Stainless Steel Nameplate - Laser etched with High contrast background
- Regreasable ball bearings (Frames 160 and up)
- Gasketed conduit box
- Class I, Div. 2, Groups A, B, C & D – T3, Class II, Div 2, Groups F & G – T3C (Cast Iron Frames only)
- Suitable for WYE/Delta Start (W and Y voltage code motors)

Features that make a difference:

- 1.25 Service Factor for 60 Hz operation (IE3)
- Optimized ventilation system for cooler operation and lower noise levels
- Solid base for lower vibration levels (Cast Iron Frames)
- Frames 225 and up can easily be F1 (B3L) converted by rotating the terminal box adapter or F3 by removing it
- Aluminum frames have removable feet for easy F1, F2 and F3 (B3L, B3R, B3T) conversion
- Terminal blocks

***Inverter Rated:**
1000:1 for variable torque
12:1 for constant torque
Excludes 660-690V

** Insulated NDE bearing housing standard on 315L and above*

ADDITIONAL TECHNICAL DATA

ELECTRICAL DATA: B-42

MECHANICAL DATA: B-106

TEFC - Foot Mount

HP	kW	RPM	Frame	Catalog Number	List Price	Mult. Symbol	Approx. Shipping Weight (lbs)	Service Factor	FL Amps @ High	FL. Eff (%)	"C" Dimension (in)	Voltage (V)	Notes
0.25	0.18	3600//3000	63	.1836EP3EAL63-W22	$280	T1	14	1.15	0.48	68.0	8.504	230/460//190/380	2;7
		1800//1500	63	.1818EP3EAL63-W22	$267	T1	16	1.15	0.51	69.0	8.504	230/460//190/380	2;7
		1200//1000	71	.1812EP3EAL71-W22	$338	T1	22	1.15	0.77	61.0	9.764	230/460//190/380	2;7
		900//750	80	.1809EP3EAL80-W22	$540	T1	30	1.15	0.80	50.5	10.866	230/460//190/380	2;7
		900//750	80	.1809EP3WAL80-W22	$540	T1	28	1.15	0.80	50.5	10.866	460//220-240/380-415	2;7
0.33	0.25	3600//3000	63	.2536EP3EAL63-W22	$286	T1	16	1.15	0.62	70.0	8.504	230/460//190/380	2;7
		1800//1500	71	.2518EP3EAL71-W22	$282	T1	24	1.15	0.68	73.0	9.764	230/460//190/380	2;7
		1200//1000	71	.2512EP3EAL71-W22	$363	T1	24	1.15	1.00	64.0	9.764	230/460//190/380	2;7
		900//750	80	.2509EP3EAL80-W22	$583	T1	29	1.15	0.87	57.5	10.866	230/460//190/380	2;7
		900//750	80	.2509EP3WAL80-W22	$583	T1	32	1.15	0.87	57.5	10.866	460//220-240/380-415	2;7
0.5	0.37	3600//3000	71	.3736EP3EAL71-W22	$309	T1	22	1.15	0.83	73.0	9.764	230/460//190/380	2;7
		1800//1500	71	.3718EP3EAL71-W22	$290	T1	24	1.15	1.06	73.0	9.764	230/460//190/380	2;7
		1200//1000	80	.3712EP3EAL80-W22	$378	T1	27	1.15	1.07	64.0	10.866	230/460//190/380	2;7
		900//750	90S/L	.3709EP3EAL90S-W22	$662	T1	40	1.15	1.35	61.5	12.953	230/460//190/380	2;7
		900//750	90S/L	.3709EP3WAL90S/L-W22	$662	T1	40	1.15	1.35	61.5	12.953	460//220-240/380-415	2;7
0.75	0.55	3600//3000	71	.5536EP3EAL71-W22	$316	T1	23	1.15	1.14	76.0	9.764	230/460//190/380	2;7
		1800//1500	80	.5518EP3EAL80-W22	$333	T1	28	1.15	1.25	77.0	10.866	230/460//190/380	2;7
		1200//1000	80	.5512EP3EAL80-W22	$405	T1	32	1.15	1.63	66.0	10.866	230/460//190/380	2;7
		900//750	90S/L	.5509EP3EAL90L-W22	$696	T1	46	1.15	2.12	62.5	12.953	230/460//190/380	2;7
		900//750	90S/L	.5509EP3WAL90S/L-W22	$696	T1	58	1.15	2.12	62.5	12.953	460//220-240/380-415	2;7
1	0.75	3600//3000	80	.7536ET3WAL80-W22	$397	T1	27	1.25	1.43	81.5	10.866	460//220-240/380-415	2;7
		1800//1500	90S/L	.7518ET3EAL90S/L-W22	$420	T1	42	1.25	1.47	85.5	12.953	230/460//190/380	2;7
		1800//1500	90S/L	.7518ET3WAL90S/L-W22	$420	T1	43	1.25	1.47	85.5	12.953	460//220-240/380-415	2;7
		1200//1000	90S/L	.7512ET3EAL90S-W22	$537	T1	47	1.25	1.68	82.5	12.953	230/460//190/380	2;7
		1200//1000	90S/L	.7512ET3WAL90S-W22	$537	T1	51	1.25	1.68	82.5	12.953	460//220-240/380-415	2;7
		900//750	100L	.7509ET3EAL100L-W22	$869	T1	68	1.25	2.11	75.5	14.803	230/460//190/380	2;7
1.5	1.1	3600//3000	80	00136ET3EAL80-W22	$444	T1	29	1.25	2.03	84.0	10.866	230/460//190/380	2;7
		3600//3000	80	00136ET3WAL80-W22	$444	T1	30	1.25	2.03	84.0	10.866	460//220-240/380-415	2;7
		1800//1500	90S/L	00118ET3EAL90S-W22	$470	T1	44	1.25	2.05	86.5	12.953	230/460//190/380	2;7
		1800//1500	90S/L	00118ET3WAL90S-W22	$470	T1	44	1.25	2.05	86.5	12.953	460//220-240/380-415	2;7
		1200//1000	100L	00112ET3EAL100L-W22	$746	T1	80	1.00	2.32	87.5	14.803	230/460//190/380	2;7
2	1.5	3600//3000	90S/L	00156ET3EAL90S-W22	$504	T1	44	1.25	2.69	85.5	12.953	230/460//190/380	2;7
		3600//3000	90S/L	00156ET3WAL90S-W22	$504	T1	44	1.25	2.69	85.5	12.953	460//220-240/380-415	2;7
		1800//1500	90S/L	00158ET3EAL90L-W22	$524	T1	49	1.25	2.79	86.5	12.953	230/460//190/380	2;7
		1800//1500	90S/L	00158ET3WAL90L-W22	$524	T1	49	1.25	2.79	86.5	12.953	460//220-240/380-415	2;7
		1200//1000	112M	00152ET3EAL112M-W22	$923	T1	93	1.25	3.08	88.5	15.472	230/460//190/380	2;7
		1200//1000	112M	00152ET3WAL112M-W22	$923	T1	93	1.25	3.08	88.5	15.472	460//220-240/380-415	2;7
		900//750	112M	00159ET3YAL112M-W22	$1,001	T1	90	1.25	3.50	84.0	15.472	460//380-415/660-690	2;7
3	2.2	3600//3000	90S/L	00236ET3EAL90L-W22	$756	T1	50	1.25	3.85	86.5	12.953	230/460//190/380	2;7
		3600//3000	90S/L	00236ET3WAL90L-W22	$756	T1	49	1.25	3.85	86.5	12.953	460//220-240/380-415	2;7
		1800//1500	100L	00218ET3EAL100L-W22	$630	T1	66	1.25	4.11	89.5	14.803	230/460//190/380	2;7
		1800//1500	100L	00218ET3WAL100L-W22	$630	T1	66	1.25	4.11	89.5	14.803	460//220-240/380-415	2;7
		1200//1000	132S	00212ET3EAL132S-W22	$1,166	T1	131	1.25	4.41	89.5	19.291	230/460//190/380	2;7
		1200//1000	132S	00212ET3YAL132S-W22	$1,166	T1	136	1.25	4.41	89.5	19.291	460//380-415/660-690	2;7
		900//750	132S	00209ET3YAL132S-W22	$1,412	T1	145	1.25	4.75	85.5	19.291	460//380-415/660-690	2;7

continued on next page

Refer to electrical and mechanical data sections for additional technical information. Please refer to back cover for description of "NOTES"

For detailed specifications, data sheets, drawings and performance curves visit http://www.weg.net

Three-Phase General Purpose Motors

IEC TRU-Metric™

TEFC - Foot Mount - *continued*

HP	kW	RPM	Frame	Catalog Number	List Price	Mult. Symbol	Approx. Shipping Weight (lbs)	Service Factor	FL Amps @ High	FL. Eff (%)	"C" Dimension (in)	Voltage (V)	Notes
4	3	3600//3000	100L	00336ET3EAL100L-W22	$805	T1	65	1.25	5.01	88.5	14.803	230/460//190/380	2;7
		3600//3000	100L	00336ET3WAL100L-W22	$805	T1	65	1.25	5.01	88.5	14.803	460//220-240/380-415	2;7
		1800//1500	100L	00318ET3EAL100L-W22	$672	T1	77	1.25	5.33	89.5	14.803	230/460//190/380	2;7
		1800//1500	100L	00318ET3WAL100L-W22	$672	T1	77	1.25	5.33	89.5	14.803	460//220-240/380-415	2;7
		1200//1000	132M	00312ET3EAL132M-W22	$1,247	T1	137	1.25	6.01	89.5	19.291	230/460//190/380	2;7
		1200//1000	132M	00312ET3YAL132M-W22	$1,247	T1	147	1.25	6.01	89.5	19.291	460//380-415/660-690	2;7
		900//750	132M	00309ET3EAL132M-W22	$1,610	T1	193	1.25	6.29	85.5	19.291	230/460//190/380	2;7
		900//750	132M	00309ET3YAL132M-W22	$1,610	T1	156	1.25	6.29	85.5	19.291	460//380-415/660-690	2;7
5.5	4	3600//3000	112M	00436ET3EAL112M-W22	$874	T1	86	1.25	6.67	88.5	15.472	230/460//190/380	2;7
		3600//3000	112M	00436ET3YAL112M-W22	$874	T1	86	1.25	6.67	88.5	15.472	460//380-415/660-690	2;7
		1800//1500	112M	00418ET3EAL112M-W22	$679	T1	93	1.25	7.28	89.5	15.472	230/460//190/380	2;7
		1800//1500	112M	00418ET3YAL112M-W22	$679	T1	93	1.25	7.28	89.5	15.472	460//380-415/660-690	2;7
		1200//1000	132M	00412ET3EAL132M-W22	$1,254	T1	147	1.25	7.90	89.5	19.291	230/460//190/380	2;7
		1200//1000	132M	00412ET3YAL132M-W22	$1,254	T1	147	1.25	7.90	89.5	19.291	460//380-415/660-690	2;7
		900//750	160M	00409ET3Y160M-W22	$1,947	T1	299	1.25	8.17	86.5	23.543	460//380-415/660-690	7
7.5	5.5	3600//3000	132S	00536ET3EAL132S-W22	$1,144	T1	136	1.25	8.97	89.5	19.291	230/460//190/380	2;7
		3600//3000	132S	00536ET3YAL132S-W22	$1,144	T1	136	1.25	8.97	89.5	19.291	460//380-415/660-690	2;7
		1800//1500	132S	00518ET3EAL132S-W22	$932	T1	142	1.25	9.07	91.7	19.291	230/460//190/380	2;7
		1800//1500	132S	00518ET3YAL132S-W22	$932	T1	142	1.25	9.07	91.7	19.291	460//380-415/660-690	2;7
		1200//1000	160M	00512ET3Y160M-W22	$1,760	T1	291	1.25	9.48	91.0	23.543	460//380-415/660-690	7
		900//750	160M	00509ET3Y160M-W22	$2,244	T1	306	1.25	11.1	87.5	23.543	460//380-415/660-690	7
10	7.5	3600//3000	132S	00736ET3EAL132S-W22	$1,292	T1	148	1.25	12.3	90.2	19.291	230/460//190/380	2;7
		3600//3000	132S	00736ET3YAL132S-W22	$1,292	T1	147	1.25	12.3	90.2	19.291	460//380-415/660-690	2;7
		1800//1500	132M	00718ET3EAL132M-W22	$1,110	T1	159	1.25	12.2	91.7	19.291	230/460//190/380	2;7
		1800//1500	132M	00718ET3YAL132M-W22	$1,110	T1	159	1.25	12.2	91.7	19.291	460//380-415/660-690	2;7
		1200//1000	160M	00712ET3Y160M-W22	$2,306	T1	306	1.25	13.1	91.0	23.543	460//380-415/660-690	7
		900//750	160L	00709ET3Y160L-W22	$2,774	T1	352	1.25	15.2	88.5	25.276	460//380-415/660-690	7
15	11	3600//3000	160M	01136ET3Y160M-W22	$2,102	T1	304	1.25	17.9	91.7	23.543	460//380-415/660-690	7
		1800//1500	160M	01118ET3Y160M-W22	$1,726	T1	321	1.25	18.2	92.4	23.543	460//380-415/660-690	7
		1200//1000	160L	01112ET3Y160L-W22	$3,160	T1	354	1.25	18.8	91.7	25.276	460//380-415/660-690	7
		900//750	180L	01109ET3Y180L-W22	$4,031	T1	419	1.25	19.5	89.5	27.638	460//380-415/660-690	7
20	15	3600//3000	160M	01536ET3Y160M-W22	$2,413	T1	320	1.25	24.4	91.7	23.543	460//380-415/660-690	7
		1800//1500	160L	01518ET3Y160L-W22	$2,118	T1	375	1.25	25.0	93.0	25.276	460//380-415/660-690	7
		1200//1000	180L	01512ET3Y180L-W22	$3,884	T1	447	1.25	24.7	91.7	27.638	460//380-415/660-690	7
		900//750	200L	01509ET3Y200L-W22	$5,158	T1	517	1.25	28.0	91.0	30.197	460//380-415/660-690	7
25	18.5	3600//3000	160L	01836ET3Y160L-W22	$2,925	T1	353	1.25	29.9	92.4	25.276	460//380-415/660-690	7
		1800//1500	180M	01818ET3Y180M-W22	$2,689	T1	436	1.25	30.6	93.6	26.142	460//380-415/660-690	7
		1200//1000	200L	01812ET3Y200L-W22	$4,886	T1	552	1.25	30.8	93.0	30.197	460//380-415/660-690	7
		900//750	225S/M	01809ET3Y225S/M-W22	$5,902	T1	830	1.25	31.6	93.0	34.882	460//380-415/660-690	7
30	22	3600//3000	180M	02236ET3Y180M-W22	$3,492	T1	424	1.25	34.7	92.4	26.142	460//380-415/660-690	7
		1800//1500	180L	02218ET3Y180L-W22	$3,225	T1	457	1.25	36.0	93.6	27.638	460//380-415/660-690	7
		1200//1000	200L	02212ET3Y200L-W22	$4,924	T1	601	1.25	37.1	93.0	30.197	460//380-415/660-690	7
		900//750	225S/M	02209ET3Y225S/M-W22	$7,506	T1	885	1.25	37.6	93.0	34.882	460//380-415/660-690	7

continued on next page

Please refer to back cover for description of "NOTES"

For detailed specifications, data sheets, drawings and performance curves visit http:// www.weg.net

Data subject to change without notice.

TEFC - Foot Mount - *continued*

HP	kW	RPM	Frame	Catalog Number	List Price	Mult. Symbol	Approx. Shipping Weight (lbs)	Service Factor	FL Amps @ High	FL. Eff (%)	"C" Dimension (in)	Voltage (V)	Notes
40	30	3600//3000	200L	03036ET3Y200L-W22	$4,877	T1	575	1.25	47.1	93.0	30.197	460//380-415/660-690	7
		1800//1500	200L	03018ET3Y200L-W22	$4,312	T1	580	1.25	49.4	94.1	30.197	460//380-415/660-690	7
		1200//1000	225S/M	03012ET3Y225S/M-W22	$7,689	T1	1055	1.25	47.6	94.1	34.882	460//380-415/660-690	7
		900//750	250S/M	03009ET3Y250S/M-W22	$8,858	T1	1078	1.25	50.9	93.6	37.992	460//380-415/660-690	7
50	37	3600//3000	200L	03736ET3Y200L-W22	$5,487	T1	587	1.25	61.3	93.6	30.197	460//380-415/660-690	7
		1800//1500	225S/M	03718ET3Y225S/M-W22	$6,984	T1	1041	1.25	58.5	94.5	34.882	460//380-415/660-690	7
		1200//1000	250S/M	03712ET3Y250S/M-W22	$9,947	T1	1266	1.25	58.8	94.1	37.992	460//380-415/660-690	7
		900//750	280S/M	03709ET3Y280S/M-W22	$11,751	T1	1481	1.25	64.1	94.1	42.165	460//380-415/660-690	7
60	45	3600//3000	225S/M	04536ET3Y225S/M-W22	$7,961	T1	1053	1.25	66.7	94.1	33.701	460//380-415/660-690	7
		1800//1500	225S/M	04518ET3Y225S/M-W22	$7,391	T1	1022	1.25	69.9	95.0	34.882	460//380-415/660-690	7
		1200//1000	280S/M	04512ET3Y280S/M-W22	$11,023	T1	1681	1.25	74.7	94.5	42.165	460//380-415/660-690	7
		900//750	280S/M	04509ET3Y280S/M-W22	$12,815	T1	1631	1.25	77.0	94.1	42.165	460//380-415/660-690	7
75	55	3600//3000	250S/M	05536ET3Y250S/M-W22	$9,847	T1	1259	1.25	80.3	94.5	37.992	460//380-415/660-690	7
		1800//1500	250S/M	05518ET3Y250S/M-W22	$8,961	T1	1206	1.25	85.1	95.4	37.992	460//380-415/660-690	7
		1200//1000	280S/M	05512ET3Y280S/M-W22	$13,622	T1	1794	1.25	90.2	94.5	42.165	460//380-415/660-690	7
		900//750	315S/M	05509ET3Y315S/M-W22	$15,379	T1	2436	1.25	93.7	94.5	50.157	460//380-415/660-690	7
100	75	3600//3000	280S/M	07536ET3Y280S/M-W22	$12,472	T1	1776	1.25	111	94.5	42.165	460//380-415/660-690	7
		1800//1500	280S/M	07518ET3Y280S/M-W22	$12,353	T1	1738	1.25	116	95.4	42.165	460//380-415/660-690	7
		1200//1000	315S/M	07512ET3Y315S/M-W22	$16,479	T1	2399	1.25	122	95.0	50.157	460//380-415/660-690	7
		900//750	315S/M	07509ET3Y315S/M-W22	$18,647	T1	2701	1.25	127	95.0	50.157	460//380-415/660-690	7
125	90	3600//3000	280S/M	09036ET3Y280S/M-W22	$16,720	T1	1862	1.25	132	95.0	42.165	460//380-415/660-690	7
		1800//1500	280S/M	09018ET3Y280S/M-W22	$15,220	T1	1835	1.25	139	95.4	42.165	460//380-415/660-690	7
		1200//1000	315S/M	09012ET3Y315S/M-W22	$19,448	T1	2601	1.25	146	95.4	50.157	460//380-415/660-690	7
		900//750	315S/M	09009ET3Y315S/M-W22	$21,288	T1	2884	1.25	152	95.0	50.157	460//380-415/660-690	7
150	110	3600//3000	315S/M	11036ET3Y315S/M-W22	$21,018	T1	2382	1.25	163	95.0	48.976	460//380-415/660-690	7
		1800//1500	280S/M	11018ET3Y280S/M-W22	$17,078	T1	2210	1.25	170	95.8	42.165	460//380-415/660-690	7
		1200//1000	315S/M	11012ET3Y315S/M-W22	$22,507	T1	2730	1.25	178	95.8	50.157	460//380-415/660-690	7
		900//750	315L	11009ET3Y315L-W22	$27,910	T1	3008	1.25	186	95.4	54.685	460//380-415/660-690	7;43
175	132	3600//3000	315S/M	13236ET3Y315S/M-W22	$23,180	T1	2662	1.25	193	95.4	48.976	460//380-415/660-690	7
		1800//1500	315S/M	13218ET3Y315S/M-W22	$19,732	T1	2540	1.25	203	96.2	50.157	460//380-415/660-690	7
		1200//1000	315S/M	13212ET3Y315S/M-W22	$25,642	T1	3031	1.25	214	95.8	50.157	460//380-415/660-690	7
		900//750	315L	13209ET3Y315L-W22	$33,687	T1	3796	1.25	223	95.4	54.685	460//380-415/660-690	7;43
200	150	3600//3000	315S/M	15036ET3Y315S/M-W22	$26,249	T1	2682	1.25	219	95.4	48.976	460//380-415/660-690	7
		1800//1500	315S/M	15018ET3Y315S/M-W22	$21,772	T1	2784	1.25	228	96.2	50.157	460//380-415/660-690	7
		1200//1000	315L	15012ET3Y315L-W22	$28,298	T1	3557	1.15	240	95.8	54.685	460//380-415/660-690	7;43
250	185	3600//3000	315S/M	18536ET3Y315S/M-W22	$26,529	T1	2900	1.25	269	95.8	48.976	460//380-415/660-690	7
		1800//1500	315S/M	18518ET3Y315S/M-W22	$26,247	T1	2948	1.25	284	96.2	50.157	460//380-415/660-690	7
		1200//1000	355M/L	18512ET3Y355M/L-W22	$43,876	T1	3666	1.15	311	95.8	58.346	460//380-415/660-690	7
300	220	3600//3000	315L	22036ET3Y315L-W22	$44,212	T1	3468	1.25	315	96.2	53.268	460//380-415/660-690	7;43
		1800//1500	315L	22018ET3Y315L-W22	$36,234	T1	3113	1.25	338	96.2	54.685	460//380-415/660-690	7;43
		1200//1000	355M/L	22012ET3Y355M/L-W22	$46,322	T1	4507	1.15	370	95.8	58.346	460//380-415/660-690	7;43
350	260	3600//3000	355M/L	26036ET3Y355M/L-W22	$50,637	T1	4975	1.15	373	96.2	55.591	460//380-415/660-690	7;43
		1800//1500	355M/L	26018ET3Y355M/L-W22	$43,761	T1	4218	1.15	399	96.2	58.346	460//380-415/660-690	7;43
		1200//1000	355M/L	26012ET3Y355M/L-W22	$53,001	T1	5075	1.15	436	95.9	58.346	460//380-415/660-690	7;43
400	300	3600//3000	355M/L	30036ET3Y355M/L-W22	$66,321	T1	4034	1.15	315	96.2	55.591	460//380-415/660-690	7;43
		1800//1500	355M/L	30018ET3Y355M/L-W22	$60,292	T1	4337	1.00	466	96.2	58.346	460//380-415/660-690	7;43
450	330	1800//1500	355M/L	33018ET3Y355M/L-W22	$64,557	T1	4906	1.15	505	96.5	58.346	460//380-415/660-690	7;43

Please refer to back cover for description of "NOTES"

For detailed specifications, data sheets, drawings and performance curves visit http:// www.weg.net

Three-Phase General Purpose Motors

IEC TRU-Metric™

TEFC – Foot Mount - FF-Flange Motors

HP	kW	RPM	Frame	Catalog Number	List Price	Mult. Symbol	Approx. Shipping Weight (lbs)	Service Factor	FL Amps @ High	FL. Eff (%)	"C" Dimension (in)	Voltage (V)	Notes
0.50	0.37	1800//1500	71	.3718EP3EAL71FF-W22	$340.00	T1	26	1.15	1.06	73.0	9.764	60//50	2;7
0.75	0.55	3600//3000	71	.5536EP3EAL71FF-W22	$366.00	T1	23	1.15	1.14	76.0	9.764	60//50	2;7
0.75	0.55	1800//1500	80	.5518EP3EAL80FF-W22	$383.00	T1	28	1.15	1.25	77.0	10.866	60//50	2;7
1	0.75	1800//1500	90S/L	.7518ET3WAL90S/LFF-W	$479.00	T1	43	1.25	1.47	85.5	12.953	60//50	2;7
1	0.75	1800//1500	90S/L	.7518ET3EAL90S/LFF-W	$479.00	T1	42	1.25	1.47	85.5	12.953	60//50	2;7
2	1.5	1800//1500	90S/L	00158ET3EAL90LFF-W22	$583.00	T1	49	1.25	2.79	86.5	12.953	60//50	2;7
2	1.5	1800//1500	90LFF	00158ET3WAL90LFF-W22	$583.00	T1	51	1.25	2.79	86.5	12.953	60//50	
3	2.2	3600/3000	90LFF	00236ET3WAL90LFF-W22	$815.00	T1	46	1.25	3.85	86.5	12.953	60//50	
3	2.2	1800//1500	100L	00218ET3EAL100LFF-W2	$700.00	T1	66	1.25	4.11	89.5	14.803	60//50	2;7
3	2.2	1800//1500	100LFF	00218ET3WAL100LFF-W2	$700.00	T1	68	1.25	4.05	87.5	14.803	60//50	
4	3	1800//1500	100L	00318ET3WAL100LFF-W2	$742.00	T1	77	1.25	5.33	89.5	14.803	60//50	2;7
2	1.5	1200//1000	100L	00152ET3WAL100LFF-W2	$882.00	T1	76	1.25	3.04	88.5	14.803	50//60	2;7
5.5	4	1800//1500	112M	00418ET3YAL112MFF-W2	$749.00	T1	93	1.25	7.28	89.5	15.472	60//50	2;7
5.5	4	3600//3000	112M	00436ET3YAL112MFF-W2	$944.00	T1	86	1.25	6.67	88.5	15.472	60//50	2;7
5.5	4	1200//1000	132M	00412ET3YAL132MFF-W2	$1,333.00	T1	147	1.25	7.90	89.5	19.291	50//60	2;7
7.5	5.5	1800//1500	132S	00518ET3YAL132SFF-W2	$1,011.00	T1	142	1.25	9.07	91.7	19.291	60//50	2;7
7.5	5.5	3600/3000	132SFF	00536ET3YAL132SFF-W2	$1,223.00	T1	135	1.25	8.97	89.5	19.291	60//50	39
10	7.5	1800//1500	132M	00718ET3YAL132MFF-W2	$1,189.00	T1	159	1.25	12.2	91.7	19.291	60//50	2;7
10	7.5	3600//3000	132S	00736ET3YAL132SFF-W2	$1,371.00	T1	147	1.25	12.3	90.2	19.291	60//50	2;7
20	15	1800//1500	160L	01518ET3Y160LFF-W22	$2,235.00	T1	358	1.25	25.0	93.0	25.276	60//50	7
15	11	1800//1500	160M	01118ET3Y160MFF-W22	$1,843.00	T1	304	1.25	18.2	92.4	23.543	60//50	7
15	11	3600//3000	160M	01136ET3Y160MFF-W22	$2,219.00	T1	304	1.25	17.9	91.7	23.543	60//50	7

Please refer to back cover for description of "NOTES"

For detailed specifications, data sheets, drawings and performance curves visit http:// www.weg.net

Data subject to change without notice.

Super Premium Efficie

SEVERE DUTY GENERAL PURPC

Three-Phase

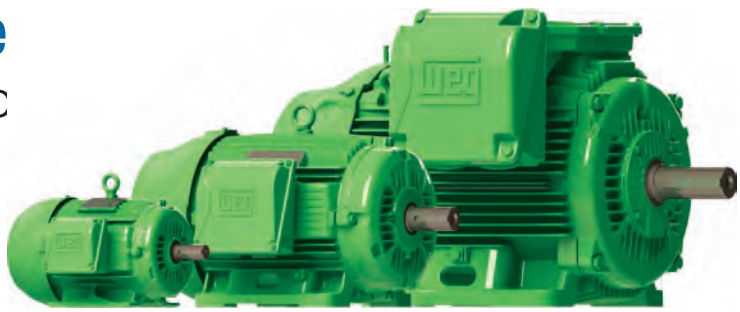

TEFC

Super Premium Efficiency motors offer high performance with maximum energy efficiency. This motor provides high efficiency and low cost of ownership throughout the entire motor lifetime. This design maximizes performance and energy savings.

WEG's W22 Super Premium cast iron platform has a superior cooling system and solid feet for cooler operation and minimal vibration and noise extending the life of the motor.

Standard Features:

- 50/60 Hz rated (380V on Nameplate - 400/415 Available - Same Horsepower at 50 Hz with a 1.0 Service Factor)
- Class F insulation (Impregnation Resin and Magnet wire are class H)
- NEMA design A. All ratings Exceed NEMA design C for motors 15HP and above
- F1 Mounted (Cast Iron frames 254T and larger are F2 convertible)
- Stainless Steel Nameplate - Laser etched with high contrast background
- Regreasable ball bearings (Frames 254T and up)
- Gasketed conduit box
- Class I, Div. 2, Groups A, B, C & D – T3, Class II, Div 2, Groups F & G – T3C

Features that make a difference:

- Super Premium efficiency exceeding NEMA Premium® levels
- 1.25 Service Factor in all ratings
- Optimized ventilation system for cooler operation and low noise levels.
- Solid base for lower vibration levels
- Frames 447T and up can easily be F2 converted by rotating the terminal box adapter
- NPT Threaded terminal box

Inverter Rated:
1000 : 1 for variable torque
20 : 1 for constant torque

ADDITIONAL TECHNICAL DATA

ELECTRICAL DATA: B-48

MECHANICAL DATA: B-68

Please refer to back cover for description of "NOTES"

For detailed specifications, data sheets, drawings and performance curves visit http://www.weg.net

Super Premium Efficiency Motors

SEVERE DUTY - GENERAL PURPOSE - Three-Phase

TEFC - Foot Mount

HP	kW	RPM	Frame	Catalog Number	List Price	Mult. Symbol	Approx. Shipping Weight (lbs)	Service Factor	FL Amps @ High	FL. Eff (%)	"C" Dimension (in)	Voltage (V)	Notes
1	0.75	3600	143/5T	00136EG3E143T-W22	$569	N1	48	1.25	1.35	84.0	13.358	230/460	36;37
		1800	143/5T	00118EG3E143T-W22	$580	N1	56	1.25	1.33	87.5	13.358	230/460	36;37
1.5	1.1	3600	143/5T	00156EG3E143T-W22	$597	N1	51	1.25	1.92	86.5	13.358	230/460	36;37
		1800	L143/5T	00158EG3EL145T-W22	$606	N1	64	1.25	1.93	88.5	14.566	230/460	36;37;39
2	1.5	3600	143/5T	00236EG3E145T-W22	$650	N1	56	1.25	2.56	87.5	13.358	230/460	36;37
		1800	L143/5T	00218EG3EL145T-W22	$673	N1	64	1.25	2.63	88.5	14.566	230/460	36;37;39
3	2.2	3600	182/4T	00336EG3E182T-W22	$839	N1	98	1.25	3.67	88.5	15.860	230/460	36;37
		1800	182/4T	00318EG3E182T-W22	$729	N1	103	1.25	3.75	91.0	15.860	230/460	36;37
		1200	213/5T	00312EG3E213T-W22	$1,242	N1	184	1.25	4.31	90.2	19.517	230/460	36;37
5	3.7	3600	182/4T	00536EG3E184T-W22	$960	N1	106	1.25	5.99	90.2	15.860	230/460	36;37
		1800	L182/4T	00518EG3EL184T-W22	$849	N1	118	1.25	6.38	91.0	17.041	230/460	36;37;39
		1200	L213/5T	00512EG3EL215T-W22	$1,465	N1	207	1.25	6.80	91.0	20.461	230/460	36;37;39
7.5	5.5	3600	213/5T	00736EG3E213T-W22	$1,238	N1	169	1.25	8.82	91.0	19.517	230/460	36;37
		1800	213/5T	00718EG3E213T-W22	$1,198	N1	186	1.25	8.94	93.0	19.517	230/460	36;37
		1200	254/6T	00712EG3E254T-W22	$2,272	N1	356	1.25	9.46	92.4	24.945	230/460	36;37
10	7.5	3600	213/5T	01036EG3E215T-W22	$1,465	N1	193	1.25	11.5	91.7	19.517	230/460	36;37
		1800	L213/5T	01018EG3EL215T-W22	$1,400	N1	209	1.25	12.0	93.0	20.461	230/460	36;37;39
		1200	254/6T	01012EG3E256T-W22	$2,636	N1	387	1.25	12.7	92.4	24.945	230/460	36;37
15	11	3600	254/6T	01536EG3E254T-W22	$2,006	N1	340	1.25	17.4	92.4	24.945	230/460	36;37
		1800	254/6T	01518EG3E254T-W22	$2,033	N1	365	1.25	17.8	93.6	24.945	230/460	36;37
		1200	284/6T	01512EG3E284T-W22	$3,620	N1	449	1.25	18.1	93.0	27.929	230/460	36;37
20	15	3600	254/6T	02036EG3E256T-W22	$2,620	N1	373	1.25	23.0	93.0	24.945	230/460	36;37
		1800	254/6T	02018EG3E256T-W22	$2,421	N1	396	1.25	24.7	94.1	24.945	230/460	36;37
		1200	284/6T	02012EG3E286T-W22	$4,358	N1	495	1.25	24.4	93.0	27.929	230/460	36;37
25	18.5	3600	284/6TS	02536EG3E284TS-W22	$3,298	N1	435	1.25	28.5	93.6	26.557	230/460	36;37
		1800	284/6T	02518EG3E284T-W22	$3,017	N1	459	1.25	30.3	94.5	27.929	230/460	36;37
		1200	324/6T	02512EG3E324T-W22	$5,211	N1	623	1.25	30.8	94.1	31.116	230/460	36;37
30	22	3600	284/6TS	03036EG3E286TS-W22	$3,917	N1	475	1.25	33.5	93.6	26.557	230/460	36;37
		1800	284/6T	03018EG3E286T-W22	$3,545	N1	491	1.25	35.6	94.5	27.929	230/460	36;37
		1200	324/6T	03012EG3E326T-W22	$5,800	N1	667	1.25	36.7	94.1	31.116	230/460	36;37
40	30	3600	324/6TS	04036EG3E324TS-W22	$5,198	N1	590	1.25	46.5	94.1	29.616	230/460	36;37
		1800	324/6T	04018EG3E324T-W22	$4,596	N1	638	1.25	48.9	95.0	31.116	230/460	36;37
		1200	364/5T	04012EG3E364T-W22	$8,012	N1	1046	1.25	48.9	95.0	34.251	230/460	36;37
50	37	3600	324/6TS	05036EG3E326TS-W22	$5,848	N1	637	1.25	57.1	94.5	29.616	230/460	36;37
		1800	324/6T	05018EG3E326T-W22	$5,610	N1	661	1.25	60.1	95.4	31.116	230/460	36;37
		1200	364/5T	05012EG3E365T-W22	$9,370	N1	1062	1.25	60.3	95.0	34.251	230/460	36;37
60	45	3600	364/5TS	06036EG3E364TS-W22	$8,307	N1	1042	1.25	66.8	95.0	32.338	230/460	36;37
		1800	364/5T	06018EG3E364T-W22	$8,128	N1	1045	1.25	70.2	95.8	34.251	230/460	36;37
		1200	404/5T	06012EG3E404T-W22	$11,547	N1	1323	1.25	72.2	95.4	39.730	230/460	36;37
75	55	3600	364/5TS	07536EG3E365TS-W22	$10,000	N1	1041	1.25	82.6	95.0	32.338	230/460	36;37
		1800	364/5T	07518EG3E365T-W22	$9,576	N1	1046	1.25	86.8	95.8	34.251	230/460	36;37
		1200	404/5T	07512EG3E405T-W22	$13,264	N1	1344	1.25	89.3	95.4	39.730	230/460	36;37
100	75	3600	404/5TS	10036EG3E405TS-W22	$13,202	N1	1299	1.25	111	95.4	36.732	230/460	36;37
		1800	404/5T	10018EG3E405T-W22	$12,858	N1	1328	1.25	116	96.2	39.730	230/460	36;37
		1200	444/5T	10012EG3E444T-W22	$17,194	N1	2145	1.25	124	95.8	45.157	230/460	36;37

continued on next page

Please refer to back cover for description of "NOTES"

For detailed specifications, data sheets, drawings and performance curves visit http://www.weg.net

Data subject to change without notice.

TEFC - Foot Mount - *continued*

HP	kW	RPM	Frame	Catalog Number	List Price	Mult. Symbol	Approx. Shipping Weight (lbs)	Service Factor	FL Amps @ High	FL. Eff (%)	"C" Dimension (in)	Voltage (V)	Notes
125	90	3600	444/5TS	12536EG3G444TS-W22	**$16,885**	N1	1872	1.25	136	95.8	41.407	460	36;37
		1800	444/5T	12518EG3G444T-W22	**$16,223**	N1	1991	1.25	140	96.2	45.157	460	36;37
		1200	444/5T	12512EG3G445T-W22	**$19,742**	N1	2231	1.25	152	95.8	45.157	460	36;37
150	110	3600	444/5TS	15036EG3G445TS-W22	**$20,770**	N1	2071	1.25	163	96.2	41.407	460	36;37
		1800	444/5T	15018EG3G445T-W22	**$19,162**	N1	2226	1.25	170	96.5	45.157	460	36;37
		1200	447/9T	15012EG3G449T-W22	**$22,703**	N1	3098	1.25	179	96.2	56.338	460	36;37
200	150	3600	445/7TS	20036EG3G447TS-W22	**$25,918**	N1	2333	1.25	217	96.2	44.951	460	36;37
		1800	447/9T	20018EG3G449T-W22	**$23,208**	N1	2995	1.25	234	96.8	56.338	460	36;37
		1200	447/9T	20012EG3G449T-W22	**$27,646**	N1	3145	1.25	245	96.2	56.338	460	36;37
250	185	3600	445/7TS	25036EG3G447TS-W22	**$32,831**	N1	2480	1.25	267	96.5	44.951	460	36;37
		1800	447/9T	25018EG3G449T-W22	**$29,388**	N1	3083	1.25	286	96.8	56.338	460	36;37

Motors | Automation | Energy | Transmission & Distribution | Coatings

Super Premium Efficiency

The most efficient induction motor in the World!

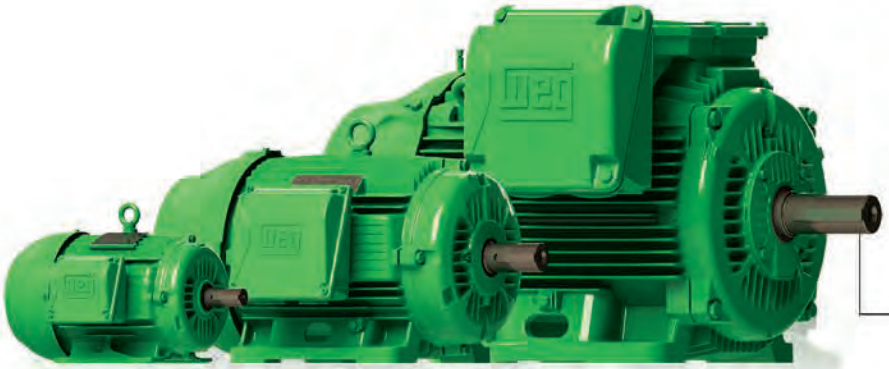

Motors with higher efficiency
and lower total cost of ownership...
We call it WEGnology.

GENERAL PURPOSE

TEFC – Foot Mount A-83
TEFC – C-Face – Foot Mount A-90
TEFC – C-Face – Footless A-92

IEEE 841

TEFC – Foot Mount A-94
TEFC – C-Face – Foot Mount A-98
TEFC – C-Face – Footless A-99

CRUSHER DUTY

TEFC – Foot Mount A-102

VECTOR DUTY

TENV – Foot Mount – Double C-Face A-104

IEC TRU-METRIC™

TEFC – Foot Mount IE3 . . . . . A-106

Severe-Duty – Three Phase Motors

You Do Not Need A Special Motor For Severe Duty.

Severe Duty Is Standard With WEG.

W22 - Cast Iron

Standard Features:

- 50/60 Hz rated (380V on nameplate - 400/415 available)
- Rated 50HZ at same horsepower up to 250HP 1.0 Service Factor for 2, 4 & 6 pole motors
- Rated 50Hz at same horsepower up to 125HP 1.0 Service Factor for 8 pole motors
- Class F insulation (impregnation resin and magnet wire are class H)
- F1 mounted (cast iron frames are F2 convertible). Frames 447T and up can easily be F2 converted by simply rotating the terminal box adapter
- Cast iron frames: regreasable ball bearings (frames 254T and up)
- Gasketed conduit box

*Inverter Rated

1000:1 for Variable Torque

NEMA Premium®

20:1 Constant Torque up to 250HP

6:1 Constant Torque 300HP and up

** Insulated housing standard on L449T and above*

ADDITIONAL TECHNICAL DATA

ELECTRICAL DATA:	B-12
MECHANICAL DATA:	B-68

Features that make a difference:

- All NEMA Premium® ratings have a 1.25 Service Factor (up to 100 HP) resulting in cooler operation and extended life of the motor
- All Cast Iron Construction, including Terminal Box and Fan Cover (*)
- Solid feet for low vibration levels and impact absorption
- Optimized ventilation system for cool operation and extended life
- High Grade FC200 cast iron provides superior mechanical strength and heat dissipation
- All WEG W22 motors are Totally Enclosed Fan Cooled with a true IP55 rating against dust and moisture. (IP56, IP65 and IP66 available as optional)
- Exclusive W-Seal 364T and larger provides superior bearing protection
- Taconite Labyrinth seal 586 Frame and larger
- Exclusive WEG painting system exceed 200hrs ASTM 117 corrosion test (Exceeds IEEE 841 standard)
- Balanced to 0.08 inches per second vibration limits (Meets IEEE 841 standard)
- Four Bolt Conduit Cover with glued Neoprene Gasket
- Impregnation Resin and magnet wire are insulation class H
- Stainless Steel Nameplate - Laser etched with high contrast background
- Corrosion Proof Drains
- Inverter Duty per NEMA MG1, Part 31
- Certified Class I Div 2, Groups A, B, C & D; Class II, Div 2, Groups F & G
- Suitable for IEEE45 USCG 259 – Marine Duty

*Cast iron fan cover available as an option on 143-215T frames

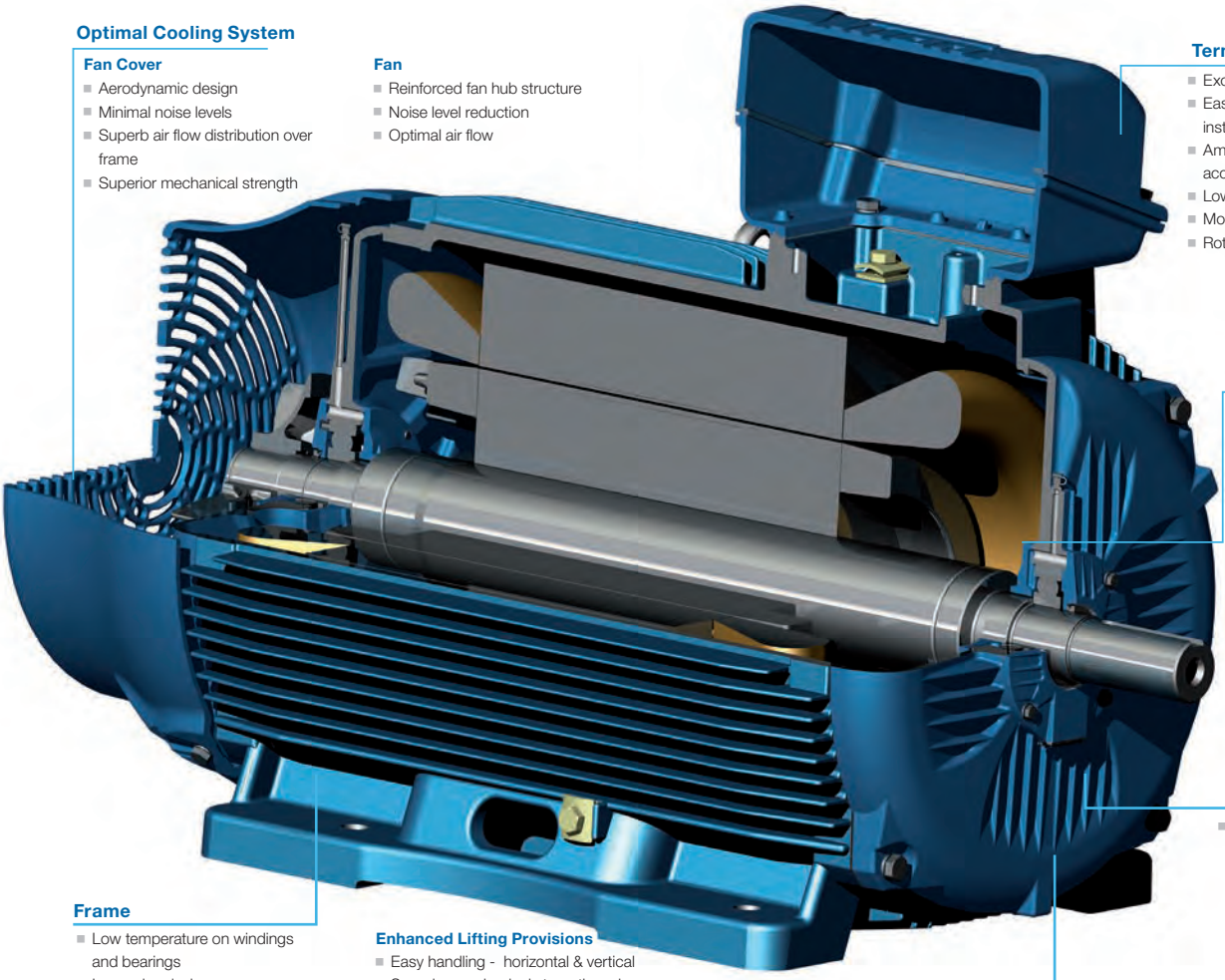

Optimal Cooling System

Fan Cover
- Aerodynamic design
- Minimal noise levels
- Superb air flow distribution over frame
- Superior mechanical strength

Fan
- Reinforced fan hub structure
- Noise level reduction
- Optimal air flow

Terminal Box
- Excellent connection quality
- Easy cable handling during installation
- Ample space available for accessory installation
- Low Maintenance
- Mounting F1/F2/F3
- Rotation on 90° stages

Bearing Caps

External
- Finned surface for optimal bearing heat dissipation

Internal
- Positive pressure lubrication system
- Excellent bearing lubrication quality improvement
- Lower bearing temperature
- 1.25 SF up to 100 hp

Seal Subsystem
- Excellent dust and moisture protection

Frame
- Low temperature on windings and bearings
- Low noise design
- Terminal box position outlet on top; 447T and larger

Pad for vibration sensor
- Displaced 90° from each other

Enhanced Lifting Provisions
- Easy handling - horizontal & vertical
- Superior mechanical strength and handling safety

Solid feet
- Impact resistance
- Ideal for high vibration level applications

Endshields Subsystem

DE (Drive Endshield)
- Fin design increases air flow
- Bearing moved outwards for better load support
- Bearing heat dissipation for reduced bearing temperature
- Reinforced endshield structure

NDE (Non-Drive Endshield)
- Smooth exterior surface
- Optimal air flow
- Designed for low noise
- Structural rigidity for low vibration
- Insulated housing standard on L447/9T and above

Severe Duty - Three-Phase Motors

GENERAL PURPOSE

TEFC - Foot Mount

HP	kW	RPM	Frame	Catalog Number	List Price	Mult. Symbol	Approx. Shipping Weight (lbs)	Service Factor	FL Amps @ High	FL. Eff (%)	"C" Dimension (in)	Voltage (V)	Notes
1	0.75	3600	143/5T	00136ET3E143T-W22	$538	N1	45	1.25	1.44	81.5	13.358	230/460	
		3600	143/5T	00136ET3H143T-W22	$538	N1	44	1.25	1.15	81.5	13.358	575	
		1800	143/5T	00118ET3E143T-W22	$527	N1	48	1.25	1.47	85.5	13.358	230/460	
		1800	143/5T	00118ET3H143T-W22	$527	N1	48	1.25	1.18	85.5	13.358	575	
		1200	143/5T	00112ET3E145T-W22	$608	N1	55	1.25	1.73	82.5	13.358	230/460	
		1200	143/5T	00112ET3H145T-W22	$608	N1	55	1.25	1.38	82.5	13.358	575	
		900	182/4T	00109ET3E182T-W22	$1,043	N1	88	1.25	2.30	78.5	15.860	230/460	
		900	182/4T	00109ET3H182T-W22	$1,043	N1	104	1.25	1.84	78.5	15.860	575	
1.5	1.1	3600	143/5T	00156ET3E143T-W22	$543	N1	49	1.25	1.96	84.0	13.358	230/460	
		3600	143/5T	00156ET3H143T-W22	$543	N1	49	1.25	1.57	84.0	13.358	575	
		1800	143/5T	00158ET3E145T-W22	$551	N1	53	1.25	2.02	86.5	13.358	230/460	
		1800	143/5T	00158ET3H145T-W22	$551	N1	53	1.25	1.62	86.5	13.358	575	
		1200	182/4T	00152ET3E182T-W22	$754	N1	97	1.25	2.54	87.5	15.860	230/460	
		1200	182/4T	00152ET3H182T-W22	$754	N1	97	1.25	2.03	87.5	15.860	575	
		900	182/4T	00159ET3E184T-W22	$1,207	N1	102	1.25	2.70	82.5	15.860	230/460	
		900	182/4T	00159ET3H184T-W22	$1,207	N1	102	1.25	2.16	82.5	15.860	575	
2	1.5	3600	143/5T	00236ET3E145T-W22	$591	N1	54	1.25	2.56	85.5	13.358	230/460	
		3600	143/5T	00236ET3H145T-W22	$591	N1	54	1.25	2.05	85.5	13.358	575	
		1800	143/5T	00218ET3E145T-W22	$612	N1	51	1.25	2.76	86.5	13.358	230/460	
		1800	143/5T	00218ET3H145T-W22	$612	N1	54	1.25	2.21	86.5	13.358	575	
		1200	182/4T	00212ET3E184T-W22	$819	N1	108	1.25	3.22	88.5	15.860	230/460	39
		1200	182/4T	00212ET3H184T-W22	$819	N1	103	1.25	2.58	88.5	15.860	575	39
		900	213/5T	00209ET3E213T-W22	$1,848	N1	171	1.25	3.39	85.5	19.517	230/460	
		900	213/5T	00209ET3H213T-W22	$1,848	N1	171	1.25	2.71	85.5	19.517	575	
3	2.2	3600	182/4T	00336ET3E182T-W22	$763	N1	99	1.25	3.63	86.5	15.860	230/460	
		3600	182/4T	00336ET3H182T-W22	$763	N1	99	1.25	2.90	86.5	15.860	575	
		1800	182/4T	00318ET3E182T-W22	$663	N1	92	1.25	3.91	89.5	15.860	230/460	
		1800	182/4T	00318ET3H182T-W22	$663	N1	94	1.25	3.13	89.5	15.860	575	
		1200	213/5T	00312ET3E213T-W22	$1,129	N1	160	1.25	4.41	89.5	19.517	230/460	
		1200	213/5T	00312ET3H213T-W22	$1,129	N1	163	1.25	3.53	89.5	19.517	575	
		900	213/5T	00309ET3E215T-W22	$2,115	N1	189	1.25	4.55	85.5	19.517	230/460	
		900	213/5T	00309ET3H215T-W22	$2,115	N1	188	1.25	3.64	85.5	19.517	575	
5	3.7	3600	182/4T	00536ET3E184T-W22	$873	N1	103	1.25	5.90	88.5	15.860	230/460	
		3600	182/4T	00536ET3H184T-W22	$873	N1	106	1.25	4.72	88.5	15.860	575	
		1800	182/4T	00518ET3E184T-W22	$772	N1	101	1.25	6.45	89.5	15.860	230/460	
		1800	182/4T	00518ET3H184T-W22	$772	N1	104	1.25	5.16	89.5	15.860	575	
		1800	182/4T	00518ET3P184T-W22	$772	N1	103	1.25	14.8	89.5	15.860	200	
		1200	213/5T	00512ET3E215T-W22	$1,332	N1	170	1.25	6.83	89.5	19.517	230/460	
		1200	213/5T	00512ET3H215T-W22	$1,332	N1	180	1.25	5.46	89.5	19.517	575	
		900	254/6T	00509ET3E254T-W22	$3,301	N1	302	1.25	7.58	87.5	24.945	230/460	
		900	254/6T	00509ET3H254T-W22	$3,301	N1	321	1.25	6.06	87.5	24.945	575	

continued on next page

Please refer to back cover for description of "NOTES"

For detailed specifications, data sheets, drawings and performance curves visit http://www.weg.net

Data subject to change without notice.

TEFC - Foot Mount - *continued*

HP	kW	RPM	Frame	Catalog Number	List Price	Mult. Symbol	Approx. Shipping Weight (lbs)	Service Factor	FL Amps @ High	FL. Eff (%)	"C" Dimension (in)	Voltage (V)	Notes
7.5	5.5	3600	182/4T	00736ET3E184T-W22	$1,074	N1	106	1.25	8.76	89.5	15.860	230/460	12
		3600	213/5T	00736ET3E213T-W22	$1,125	N1	149	1.25	8.76	89.5	19.517	230/460	
		3600	213/5T	00736ET3H213T-W22	$1,125	N1	163	1.25	7.01	89.5	19.517	575	
		1800	213/5T	00718ET3E213T-W22	$1,089	N1	170	1.25	9.18	91.7	19.517	230/460	
		1800	213/5T	00718ET3H213T-W22	$1,089	N1	174	1.25	7.34	91.7	19.517	575	
		1800	213/5T	00718ET3P213T-W22	$1,089	N1	175	1.25	21.1	91.7	19.517	200	
		1200	254/6T	00712ET3E254T-W22	$2,065	N1	300	1.25	9.48	91.0	24.945	230/460	
		1200	254/6T	00712ET3H254T-W22	$2,065	N1	316	1.25	7.58	91.0	24.945	575	39
		900	254/6T	00709ET3E256T-W22	$3,658	N1	317	1.25	11.1	87.5	24.945	230/460	
		900	254/6T	00709ET3H256T-W22	$3,658	N1	373	1.25	8.88	87.5	24.945	575	
10	7.5	3600	213/5T	01036ET3E215T-W22	$1,332	N1	172	1.25	11.6	90.2	19.517	230/460	
		3600	213/5T	01036ET3H215T-W22	$1,332	N1	180	1.25	9.28	90.2	19.517	575	
		1800	213/5T	01018ET3E215T-W22	$1,273	N1	175	1.25	12.4	91.7	19.517	230/460	
		1800	213/5T	01018ET3H215T-W22	$1,273	N1	188	1.25	9.92	91.7	19.517	575	
		1800	213/5T	01018ET3P215T-W22	$1,273	N1	189	1.25	28.5	91.7	19.517	200	
		1200	254/6T	01012ET3E256T-W22	$2,396	N1	318	1.25	12.9	91.0	24.945	230/460	
		1200	254/6T	01012ET3H256T-W22	$2,396	N1	325	1.25	10.3	91.0	24.945	575	
		900	284/6T	01009ET3E284T-W22	$4,634	N1	373	1.25	13.4	90.2	27.929	230/460	
		900	284/6T	01009ET3H284T-W22	$4,634	N1	371	1.25	10.7	90.2	27.929	575	
15	11	3600	213/5T	01536ET3E215T-W22	$1,697	N1	192	1.25	17.0	91.0	19.517	230/460	12
		3600	254/6T	01536ET3E254T-W22	$1,824	N1	293	1.25	17.2	91.0	24.945	230/460	
		3600	254/6T	01536ET3H254T-W22	$1,824	N1	298	1.25	13.8	91.0	24.945	575	
		1800	254/6T	01518ET3E254T-W22	$1,848	N1	339	1.25	18.0	92.4	24.945	230/460	
		1800	254/6T	01518ET3H254T-W22	$1,848	N1	347	1.25	14.4	92.4	24.945	575	
		1800	254/6T	01518ET3P254T-W22	$1,848	N1	349	1.25	41.4	92.4	24.945	200	
		1200	284/6TS	01512ET3E284TS-W22	$3,291	N1	420	1.25	17.9	91.7	26.557	230/460	
		1200	284/6TS	01512ET3H284TS-W22	$3,291	N1	360	1.25	14.3	91.7	26.557	575	
		1200	284/6T	01512ET3E284T-W22	$3,291	N1	406	1.25	17.9	91.7	27.929	230/460	
		1200	284/6T	01512ET3H284T-W22	$3,291	N1	420	1.25	14.3	91.7	27.929	575	
		900	284/6T	01509ET3E286T-W22	$5,368	N1	429	1.25	19.4	90.2	27.929	230/460	
		900	284/6T	01509ET3H286T-W22	$5,368	N1	428	1.25	15.5	90.2	27.929	575	
20	15	3600	254/6T	02036ET3E256T-W22	$2,382	N1	317	1.25	23.2	91.0	24.945	230/460	
		3600	254/6T	02036ET3H256T-W22	$2,382	N1	323	1.25	18.6	91.0	24.945	575	
		1800	254/6T	02018ET3E256T-W22	$2,201	N1	386	1.25	24.1	93.0	24.945	230/460	
		1800	254/6T	02018ET3H256T-W22	$2,201	N1	396	1.25	19.3	93.0	24.945	575	
		1800	254/6T	02018ET3P256T-W22	$2,201	N1	397	1.25	55.4	93.0	24.945	200	
		1200	284/6T	02012ET3E286T-W22	$3,962	N1	432	1.25	24.2	91.7	27.929	230/460	
		1200	284/6T	02012ET3H286T-W22	$3,962	N1	447	1.25	19.4	91.7	27.929	575	
		900	284/6T	02009ET3E286T-W22	$5,854	N1	556	1.00	28.2	90.2	27.929	230/460	1;12;37
		900	324/6T	02009ET3E324T-W22	$6,339	N1	548	1.25	28.3	91.0	31.116	230/460	
		900	324/6T	02009ET3H324T-W22	$6,339	N1	546	1.25	22.6	91.0	31.116	575	

continued on next page

Please refer to back cover for description of "NOTES"

For detailed specifications, data sheets, drawings and performance curves visit http:// www.weg.net

Severe Duty - Three-Phase Motors

GENERAL PURPOSE

TEFC - Foot Mount - *continued*

HP	kW	RPM	Frame	Catalog Number	List Price	Mult. Symbol	Approx. Shipping Weight (lbs)	Service Factor	FL Amps @ High	FL. Eff (%)	"C" Dimension (in)	Voltage (V)	Notes
25	18.5	3600	284/6TS	02536ET3E284TS-W22	$2,998	N1	391	1.25	28.5	91.7	26.557	230/460	
		3600	284/6TS	02536ET3H284TS-W22	$2,998	N1	405	1.25	22.8	91.7	26.557	575	
		1800	284/6TS	02518ET3E284TS-W22	$2,743	N1	438	1.25	29.5	93.6	26.557	230/460	
		1800	284/6T	02518ET3E284T-W22	$2,743	N1	408	1.25	29.5	93.6	27.929	230/460	
		1800	284/6T	02518ET3H284T-W22	$2,743	N1	439	1.25	23.6	93.6	27.929	575	
		1200	324/6T	02512ET3E324T-W22	$4,737	N1	569	1.25	30.4	93.0	31.116	230/460	
		1200	324/6T	02512ET3H324T-W22	$4,737	N1	583	1.25	24.3	93.0	31.116	575	
		900	324/6T	02509ET3E326T-W22	$7,315	N1	593	1.25	35.9	91.0	31.116	230/460	
		900	324/6T	02509ET3H326T-W22	$7,315	N1	593	1.25	28.7	91.0	31.116	575	
30	22	3600	284/6TS	03036ET3E286TS-W22	$3,561	N1	408	1.25	33.8	91.7	26.557	230/460	
		3600	284/6TS	03036ET3H286TS-W22	$3,561	N1	425	1.25	27.0	91.7	26.557	575	
		1800	284/6TS	03018ET3E286TS-W22	$3,223	N1	476	1.25	35.1	93.6	26.557	230/460	
		1800	284/6T	03018ET3E286T-W22	$3,223	N1	461	1.25	35.1	93.6	27.929	230/460	
		1800	284/6T	03018ET3H286T-W22	$3,223	N1	476	1.25	28.1	93.6	27.929	575	
		1200	324/6T	03012ET3E326T-W22	$5,273	N1	530	1.25	36.2	93.0	31.116	230/460	
		1200	324/6T	03012ET3H326T-W22	$5,273	N1	627	1.25	29.0	93.0	31.116	575	
		900	364/5T	03009ET3E364T-W22	$11,215	N1	899	1.25	37.0	92.4	34.251	230/460	
40	30	3600	324/6TS	04036ET3E324TS-W22	$4,725	N1	546	1.25	45.8	92.4	29.616	230/460	
		3600	324/6TS	04036ET3H324TS-W22	$4,725	N1	589	1.25	36.6	92.4	29.616	575	
		1800	324/6TS	04018ET3E324TS-W22	$4,178	N1	613	1.25	47.1	94.1	31.116	230/460	
		1800	324/6T	04018ET3E324T-W22	$4,178	N1	591	1.25	47.1	94.1	31.116	230/460	
		1800	324/6T	04018ET3H324T-W22	$4,178	N1	614	1.25	37.7	94.1	31.116	575	
		1800	324/6T	04018ET3P324T-W22	$4,178	N1	625	1.25	108	94.1	31.116	200	
		1200	364/5T	04012ET3E364T-W22	$7,284	N1	964	1.25	46.5	94.1	34.251	230/460	
		1200	364/5T	04012ET3H364T-W22	$7,284	N1	904	1.25	37.2	94.1	34.251	575	
		900	364/5T	04009ET3E365T-W22	$12,194	N1	954	1.25	50.3	92.4	34.251	230/460	
50	37	3600	324/6TS	05036ET3E326TS-W22	$5,316	N1	587	1.25	56.1	93.0	29.616	230/460	
		3600	324/6TS	05036ET3H326TS-W22	$5,316	N1	610	1.25	44.9	93.0	29.616	575	
		1800	324/6TS	05018ET3E326TS-W22	$5,100	N1	637	1.25	59.2	94.5	31.116	230/460	
		1800	324/6T	05018ET3E326T-W22	$5,100	N1	585	1.25	59.2	94.5	31.116	230/460	
		1800	324/6T	05018ET3H326T-W22	$5,100	N1	634	1.25	47.4	94.5	31.116	575	
		1200	364/5T	05012ET3E365T-W22	$8,518	N1	914	1.25	57.4	94.1	34.251	230/460	
		1200	364/5T	05012ET3H365T-W22	$8,518	N1	1026	1.25	45.9	94.1	34.251	575	
		900	404/5T	05009ET3E404T-W22	$17,648	N1	1214	1.25	60.0	93.0	39.73	230/460	
60	45	3600	364/5TS	06036ET3E364TS-W22	$7,552	N1	855	1.25	67.0	93.6	32.338	230/460	
		3600	364/5TS	06036ET3G364TS-W22	$7,552	N1	961	1.25	67.0	93.6	32.338	460	
		3600	364/5TS	06036ET3H364TS-W22	$7,552	N1	968	1.25	53.6	93.6	32.338	575	
		1800	364/5TS	06018ET3E364TS-W22	$7,389	N1	1026	1.25	68.3	95.0	32.338	230/460	
		1800	364/5T	06018ET3E364T-W22	$7,389	N1	946	1.25	68.3	95.0	34.251	230/460	
		1800	364/5T	06018ET3G364T-W22	$7,389	N1	1025	1.25	68.3	95.0	34.251	460	
		1800	364/5T	06018ET3H364T-W22	$7,389	N1	1033	1.25	54.6	95.0	34.251	575	
		1200	404/5T	06012ET3E404T-W22	$10,497	N1	1252	1.25	69.5	94.5	39.730	230/460	
		1200	404/5T	06012ET3ERB404T-W22	$10,497	N1	1262	1.25	69.5	94.5	39.730	230/460	14
		1200	404/5T	06012ET3G404T-W22	$10,497	N1	1213	1.25	69.5	94.5	39.730	460	
		1200	404/5T	06012ET3H404T-W22	$10,497	N1	1255	1.25	55.6	94.5	39.730	575	
		900	404/5T	06009ET3E405T-W22	$20,443	N1	1263	1.25	73.0	93.0	39.730	230/460	

continued on next page

Please refer to back cover for description of "NOTES"

For detailed specifications, data sheets, drawings and performance curves visit http://www.weg.net

Data subject to change without notice.

TEFC - Foot Mount - *continued*

HP	kW	RPM	Frame	Catalog Number	List Price	Mult. Symbol	Approx. Shipping Weight (lbs)	Service Factor	FL Amps @ High	FL. Eff (%)	"C" Dimension (in)	Voltage (V)	Notes
75	55	3600	364/5TS	07536ET3E365TS-W22	$9,091	N1	900	1.25	81.9	93.6	32.338	230/460	
		3600	364/5TS	07536ET3G365TS-W22	$9,091	N1	963	1.25	81.9	93.6	32.338	460	
		3600	364/5TS	07536ET3H365TS-W22	$9,091	N1	967	1.25	65.5	93.6	32.338	575	
		1800	364/5TS	07518ET3E365TS-W22	$8,705	N1	988	1.25	84.1	95.4	32.338	230/460	
		1800	364/5T	07518ET3E365T-W22	$8,705	N1	969	1.25	84.1	95.4	34.251	230/460	
		1800	364/5T	07518ET3G365T-W22	$8,705	N1	1045	1.25	84.1	95.4	34.251	460	
		1800	364/5T	07518ET3H365T-W22	$8,705	N1	1050	1.25	67.3	95.4	34.251	575	
		1200	404/5T	07512ET3E405T-W22	$12,058	N1	1303	1.25	84.9	94.5	39.730	230/460	
		1200	404/5T	07512ET3ERB405T-W22	$12,058	N1	1262	1.25	84.9	94.5	39.730	230/460	14
		1200	404/5T	07512ET3G405T-W22	$12,058	N1	1298	1.25	84.9	94.5	39.730	460	
		1200	404/5T	07512ET3GRB405T-W22	$12,058	N1	1309	1.25	84.9	94.5	39.730	460	14
		1200	404/5T	07512ET3H405T-W22	$12,058	N1	1303	1.25	67.9	94.5	39.730	575	
		900	444/5T	07509ET3E444T-W22	$23,334	N1	1665	1.25	93.0	93.6	45.157	230/460	
		900	444/5T	07509ET3QRB444TF2-W2	$23,334	N1	1707	1.25	93.0	93.6	45.157	460	14
100	75	3600	404/5TS	10036ET3E405TS-W22	$12,002	N1	1024	1.25	110	94.1	36.732	230/460	
		3600	404/5TS	10036ET3G405TS-W22	$12,002	N1	1176	1.25	110	94.1	36.732	460	
		3600	404/5TS	10036ET3H405TS-W22	$12,002	N1	1182	1.25	88.0	94.1	36.732	575	
		1800	404/5TS	10018ET3E405TS-W22	$11,689	N1	1266	1.25	111	95.4	36.732	230/460	
		1800	404/5T	10018ET3E405T-W22	$11,689	N1	1190	1.25	111	95.4	39.730	230/460	
		1800	404/5T	10018ET3ERB405T-W22	$11,689	N1	1239	1.25	111	95.4	39.730	230/460	14
		1800	404/5T	10018ET3G405T-W22	$11,689	N1	1280	1.25	111	95.4	39.730	460	
		1800	404/5T	10018ET3GRB405T-W22	$11,689	N1	1199	1.25	111	95.4	39.730	460	14
		1800	404/5T	10018ET3H405T-W22	$11,689	N1	1283	1.25	88.8	95.4	39.730	575	
		1800	404/5T	10018ET3HRB405T-W22	$11,689	N1	1294	1.25	88.8	95.4	39.730	575	14
		1200	444/5T	10012ET3E444T-W22	$15,631	N1	1786	1.25	121	95.0	45.157	230/460	
		1200	444/5T	10012ET3ERB444T-W22	$15,631	N1	1859	1.25	121	95.0	45.157	230/460	14
		1200	444/5T	10012ET3G444T-W22	$15,631	N1	1840	1.25	121	95.0	45.157	460	
		1200	444/5T	10012ET3GRB444T-W22	$15,631	N1	1854	1.25	121	95.0	45.157	460	14
		1200	444/5T	10012ET3H444T-W22	$15,631	N1	1837	1.25	96.8	95.0	45.157	575	
		900	444/5T	10009ET3E445T-W22	$26,988	N1	1900	1.25	127	94.1	45.157	230/460	
		900	444/5T	10009ET3G445T-W22	$26,988	N1	1939	1.25	127	94.1	45.157	460	

continued on next page

GENERAL PURPOSE

TEFC - Foot Mount - *continued*

HP	kW	RPM	Frame	Catalog Number	List Price	Mult. Symbol	Approx. Shipping Weight (lbs)	Service Factor	FL Amps @ High	FL. Eff (%)	"C" Dimension (in)	Voltage (V)	Notes
125	90	3600	444/5TS	12536ET3E444TS-W22	$15,350	N1	1802	1.15	134	95.0	41.407	230/460	
		3600	444/5TS	12536ET3G444TS-W22	$15,350	N1	1798	1.15	134	95.0	41.407	460	
		3600	444/5TS	12536ET3H444TS-W22	$15,350	N1	1795	1.15	107	95.0	41.407	575	
		1800	444/5TS	12518ET3E444TS-W22	$14,748	N1	1627	1.15	139	95.4	41.407	230/460	
		1800	444/5T	12518ET3E444T-W22	$14,748	N1	1699	1.15	139	95.4	45.157	230/460	
		1800	444/5T	12518ET3ERB444T-W22	$14,748	N1	1730	1.15	139	95.4	45.157	230/460	14
		1800	444/5T	12518ET3G444T-W22	$14,748	N1	1710	1.15	139	95.4	45.157	460	
		1800	444/5T	12518ET3GRB444T-W22	$14,748	N1	1736	1.15	139	95.4	45.157	460	14
		1800	444/5T	12518ET3H444T-W22	$14,748	N1	1815	1.15	111	95.4	45.157	575	
		1200	444/5T	12512ET3E445T-W22	$17,947	N1	1980	1.15	143	95.0	45.157	230/460	
		1200	444/5T	12512ET3ERB445T-W22	$17,947	N1	1993	1.15	143	95.0	45.157	230/460	14
		1200	444/5T	12512ET3G445T-W22	$17,947	N1	1893	1.15	143	95.0	45.157	460	
		1200	444/5T	12512ET3GRB445T-W22	$17,947	N1	1996	1.15	143	95.0	45.157	460	14
		1200	444/5T	12512ET3H445T-W22	$17,947	N1	1974	1.15	114	95.0	45.157	575	
		900	445/7T	12509ET3G447T-W22	$28,175	N1	2235	1.15	151	94.5	48.701	460	
150	110	3600	444/5TS	15036ET3E445TS-W22	$18,882	N1	1899	1.15	161	95.0	41.407	230/460	
		3600	444/5TS	15036ET3G445TS-W22	$18,882	N1	1908	1.15	161	95.0	41.407	460	
		1800	444/5TS	15018ET3G445TS-W22	$17,420	N1	1869	1.15	170	95.8	41.407	460	
		1800	444/5T	15018ET3E445T-W22	$17,420	N1	1918	1.15	170	95.8	45.157	230/460	
		1800	444/5T	15018ET3G445T-W22	$17,420	N1	1905	1.15	170	95.8	45.157	460	
		1800	444/5T	15018ET3GRB445T-W22	$17,420	N1	1853	1.15	170	95.8	45.157	460	14
		1800	444/5T	15018ET3H445T-W22	$17,420	N1	1958	1.15	136	95.8	45.157	575	
		1800	444/5T	15018ET3HRB445T-W22	$17,420	N1	2034	1.15	136	95.8	45.157	575	14
		1200	445/7T	15012ET3E447T-W22	$20,639	N1	2354	1.15	176	95.8	48.701	230/460	
		1200	445/7T	15012ET3G447T-W22	$20,639	N1	2472	1.15	176	95.8	48.701	460	
		1200	445/7T	15012ET3GRB447T-W22	$20,639	N1	2371	1.15	176	95.8	48.701	460	14
		1200	445/7T	15012ET3H447T-W22	$20,639	N1	2467	1.15	141	95.8	48.701	575	
		900	447/9T	15009ET3G449T-W22	$30,677	N1	3079	1.15	185	94.5	56.338	460	

continued on next page

Please refer to back cover for description of "NOTES"

For detailed specifications, data sheets, drawings and performance curves visit http://www.weg.net

Data subject to change without notice.

TEFC - Foot Mount - *continued*

HP	kW	RPM	Frame	Catalog Number	List Price	Mult. Symbol	Approx. Shipping Weight (lbs)	Service Factor	FL Amps @ High	FL. Eff (%)	"C" Dimension (in)	Voltage (V)	Notes
200	150	3600	445/7TS	20036ET3E447TS-W22	$23,562	N1	2224	1.15	219	95.4	44.951	230/460	
		3600	445/7TS	20036ET3G447TS-W22	$23,562	N1	2046	1.15	219	95.4	44.951	460	
		3600	504/5S	20036ET3G504S-W22	$23,562	N1	2373	1.15	222	95.4	48.215	460	
		1800	445/7TS	20018ET3G447TS-W22	$21,098	N1	2138	1.15	230	96.2	44.951	460	
		1800	445/7T	20018ET3E447T-W22	$21,098	N1	2349	1.15	230	96.2	48.701	230/460	
		1800	445/7T	20018ET3G447T-W22	$21,098	N1	2224	1.15	230	96.2	48.701	460	
		1800	445/7T	20018ET3GRB447T-W22	$21,098	N1	2209	1.15	230	96.2	48.701	460	14
		1800	445/7T	20018ET3H447T-W22	$21,098	N1	2477	1.15	184	96.2	48.701	575	
		1800	445/7T	20018ET3HRB447T-W22	$21,098	N1	1850	1.15	184	96.2	48.701	575	14
		1800	504/5	20018ET3G504-W22	$21,098	N1	2621	1.15	228	96.2	54.095	460	
		1200	445/7T	20012ET3G447T-W22	$25,133	N1	2406	1.15	237	95.8	48.701	460	
		1200	445/7T	20012ET3GRB447T-W22	$25,133	N1	2588	1.15	237	95.8	48.701	460	14
		1200	447/9T	20012ET3E449T-W22	$25,255	N1	2495	1.15	237	95.8	56.338	230/460	
		1200	447/9T	20012ET3G449T-W22	$25,255	N1	3044	1.15	237	95.8	56.338	460	
		1200	447/9T	20012ET3GRB449T-W22	$25,255	N1	2940	1.15	237	95.8	56.338	460	14
		1200	447/9T	20012ET3H449T-W22	$25,255	N1	2933	1.15	190	95.8	56.338	575	
		1200	504/5	20012ET3G505-W22	$25,255	N1	2467	1.15	237	95.8	54.095	460	
		900	447/9T	20009ET3G449T-W22	$49,899	N1	3255	1.15	254	95.0	56.338	460	
250	185	3600	445/7TS	25036ET3G447TS-W22	$29,846	N1	2535	1.15	266	95.8	44.951	460	
		3600	447/9TS	25036ET3G449TS-W22	$33,173	N1	2730	1.15	266	95.8	52.588	460	
		1800	445/7TS	25018ET3G447TS-W22	$27,189	N1	2709	1.15	281	96.2	44.951	460	
		1800	445/7TS	25018ET3H447TS-W22	$27,189	N1	2896	1.15	225	96.2	44.951	575	
		1800	445/7T	25018ET3G447T-W22	$26,716	N1	2446	1.15	281	96.2	48.701	460	
		1800	445/7T	25018ET3GRB447T-W22	$26,716	N1	2554	1.15	281	96.2	48.701	460	14
		1800	445/7T	25018ET3HRB447T-W22	$26,716	N1	2414	1.15	225	96.2	48.701	575	14
		1800	447/9T	25018ET3G449T-W22	$26,803	N1	2879	1.15	281	96.2	56.338	460	
		1800	447/9T	25018ET3GRB449T-W22	$26,803	N1	2815	1.15	281	96.2	56.338	460	14
		1200	447/9T	25012ET3E449T-W22	$35,555	N1	3217	1.15	292	95.8	56.338	230/460	
		1200	447/9T	25012ET3G449T-W22	$35,555	N1	3090	1.15	292	95.8	56.338	460	
		1200	447/9T	25012ET3GRB449T-W22	$35,555	N1	3224	1.15	292	95.8	56.338	460	14
		1200	447/9T	25012ET3H449T-W22	$35,555	N1	3206	1.15	234	95.8	56.338	575	
		1200	586/7	25012ET3G586/7-W22	$39,631	N1	3769	1.15	299	95.8	61.902	460	43
		900	L447/9T	25009ET3G449T-W22	$56,168	N1	3590	1.15	308	95.4	57.181	460	43
300	220	3600	447/9TS	30036ET3G449TS-W22	$38,269	N1	2987	1.15	320	95.8	52.588	460	
		1800	447/9TS	30018ET3G449TS-W22	$31,384	N1	2894	1.15	330	96.2	52.588	460	44
		1800	447/9T	30018ET3G449T-W22	$31,384	N1	2888	1.15	330	96.2	56.338	460	
		1800	447/9T	30018ET3GRB449T-W22	$31,384	N1	2992	1.15	330	96.2	56.338	460	14
		1200	447/9T	30012ET3G449T-W22	$38,437	N1	3178	1.15	356	95.8	56.338	460	37
		1200	586/7	30012ET3G586/7-W22	$44,301	N1	4061	1.15	356	95.8	61.902	460	43
		900	L447/9T	30009ET3G449T-W22	$58,655	N1	3826	1.15	371	95.4	57.181	460	19;43

continued on next page

Please refer to back cover for description of "NOTES"

For detailed specifications, data sheets, drawings and performance curves visit http:// www.weg.net

TEFC - Foot Mount - *continued*

HP	kW	RPM	Frame	Catalog Number	List Price	Mult. Symbol	Approx. Shipping Weight (lbs)	Service Factor	FL Amps @ High	FL. Eff (%)	"C" Dimension (in)	Voltage (V)	Notes
350	260	3600	447/9TS	35036ET3G449TS-W22	$43,805	N1	3120	1.15	377	96.2	52.588	460	
		1800	447/9TS	35018ET3G449TS-W22	$36,517	N1	3123	1.15	394	96.2	52.588	460	44
		1800	447/9T	35018ET3G449T-W22	$36,517	N1	3168	1.15	394	96.2	56.338	460	
		1800	447/9T	35018ET3GRB449T-W22	$36,517	N1	2941	1.15	394	96.2	56.338	460	14
		1200	L447/9T	35012ET3G449T-W22	$47,633	N1	3781	1.15	415	95.8	57.181	460	37;43
		1200	L447/9T	35012ET3GRB449T-W22	$47,633	N1	3800	1.15	415	95.8	57.181	460	14;19;37;43
		900	586/7	35009ET3G586/7-W22	$64,873	N1	5028	1.00	426	95.8	61.902	460	1;43
400	300	3600	L447/9TS	40036ET3G449TS-W22	$44,605	N1	3361	1.15	432	95.8	53.431	460	43
		1800	L447/9TS	40018ET3G449TS-W22	$43,805	N1	3328	1.15	445	96.2	53.431	460	43
		1800	L447/9T	40018ET3G449T-W22	$43,805	N1	3416	1.15	445	96.2	57.181	460	43
		1800	L447/9T	40018ET3GRB449T-W22	$43,805	N1	3404	1.15	445	96.2	57.181	460	14;43
		1800	L447/9T	40018ET3H449T-W22	$43,805	N1	3400	1.15	356	96.2	57.181	575	43
		1200	L447/9T	40012ET3G449T-W22	$52,307	N1	3720	1.15	477	95.8	57.181	460	19;37;43
		1200	L447/9T	40012ET3GRB449T-W22	$52,307	N1	3827	1.15	477	95.8	57.181	460	14;19;37;43
		1200	586/7	40012ET3G586/7-W22	$56,201	N1	4663	1.15	483	96.2	61.902	460	43
		900	588/9	40009ET3G588/9-W22	$66,123	N1	3308	1.00	498	95.7	69.381	460	1;43
450	330	3600	L447/9TS	45036ET3G449TS-W22	$49,610	N1	3537	1.00	475	95.8	53.431	460	1;43
		1800	L447/9T	45018ET3G449T-W22	$48,010	N1	3681	1.15	501	96.2	57.181	460	43
		1800	L447/9T	45018ET3GRB449T-W22	$48,010	N1	3657	1.15	501	96.2	57.181	460	14;43
		1200	586/7	45012ET3G586/7-W22	$62,251	N1	4957	1.00	532	96.2	61.902	460	1;43
		1200	586/7	45012ET3GRB586/7-W22	$62,251	N1	5248	1.00	532	96.2	61.902	460	1;14;43
		900	588/9	45009ET3G588/9-W22	$68,715	N1	5915	1.00	534	95.8	69.381	460	1;43;44
500	370	3600	586/7S	50036ET3G586/7S-W22	$56,305	N1	4649	1.15	530	96.2	55.027	460	43;44
		1800	L447/9T	50018ET3G449T-W22	$50,594	N1	3889	1.00	561	96.2	57.181	460	1;19;43
		1800	L447/9T	50018ET3GRB449T-W22	$50,594	N1	5424	1.00	561	96.2	57.181	460	1;14;19;43
		1200	586/7	50012ET3G586/7-W22	$62,962	N1	4916	1.00	603	96.2	61.902	460	1;43;44
600	450	3600	588/9S	60036ET3G588/9S-W22	$64,635	N1	5142	1.00	650	96.5	62.506	460	1;43;44
		1800	586/7	60018ET3G586/7-W22	$60,316	N1	4963	1.00	665	96.5	61.902	460	1;43;44
		1200	588/9	60012ET3G588/9-W22	$71,374	N1	6168	1.00	743	96.2	69.381	460	1;43;44
650	480	3600	588/9S	65036ET3G588/9S-W22	$66,835	N1	4805	1.00	685	96.6	62.506	460	1;43;44
		1800	588/9	65018ET3G588/9-W22	$66,701	N1	5597	1.00	734	96.6	69.381	460	1;43;44
700	515	3600	588/9S	70036ET3G588/9S-W22	$71,254	N1	5680	1.00	736	96.6	62.506	460	1;19;43;44
		1800	588/9	70018ET3G588/9-W22	$71,185	N1	5940	1.00	788	96.6	69.381	460	1;43;44
750	550	1800	588/9	75018ET3G588/9-W22	$74,025	N1	3308	1.00	840	96.7	69.381	460	1;43;44

Please refer to back cover for description of "NOTES"

For detailed specifications, data sheets, drawings and performance curves visit http://www.weg.net

Data subject to change without notice.

TEFC - C-Face - Foot Mount

HP	kW	RPM	Frame	Catalog Number	List Price	Mult. Symbol	Approx. Shipping Weight (lbs)	Service Factor	FL Amps @ High	FL. Eff (%)	"C" Dimension (in)	Voltage (V)	Notes
1	0.75	3600	143/5TC	00136ET3E143TC-W22	$566	N1	47	1.25	1.44	81.5	13.358	230/460	
		1800	143/5TC	00118ET3E143TC-W22	$555	N1	50	1.25	1.47	85.5	13.358	230/460	
		1800	143/5TC	00118ET3H143TC-W22	$555	N1	50	1.25	1.18	85.5	13.358	575	
		1200	143/5TC	00112ET3E145TC-W22	$636	N1	57	1.25	1.73	82.5	13.358	230/460	
1.5	1.1	3600	143/5TC	00156ET3E143TC-W22	$571	N1	52	1.25	1.96	84.0	13.358	230/460	
		3600	143/5TC	00156ET3H143TC-W22	$571	N1	51	1.25	1.57	84.0	13.358	575	
		1800	143/5TC	00158ET3E145TC-W22	$579	N1	56	1.25	2.02	86.5	13.358	230/460	
		1800	143/5TC	00158ET3H145TC-W22	$579	N1	56	1.25	1.62	86.5	13.358	575	
		1200	182/4TC	00152ET3E182TC-W22	$792	N1	101	1.25	2.54	87.5	15.860	230/460	
2	1.5	3600	143/5TC	00236ET3E145TC-W22	$619	N1	56	1.25	2.56	85.5	13.358	230/460	
		3600	143/5TC	00236ET3H145TC-W22	$619	N1	56	1.25	2.05	85.5	13.358	575	
		1800	143/5TC	00218ET3E145TC-W22	$640	N1	53	1.25	2.76	86.5	13.358	230/460	
		1800	143/5TC	00218ET3H145TC-W22	$640	N1	57	1.25	2.21	86.5	13.358	575	
		1200	182/4TC	00212ET3E184TC-W22	$857	N1	112	1.25	3.22	88.5	15.860	230/460	39
3	2.2	3600	182/4TC	00336ET3E182TC-W22	$802	N1	103	1.25	3.63	86.5	15.860	230/460	
		3600	182/4TC	00336ET3H182TC-W22	$802	N1	103	1.25	2.90	86.5	15.860	575	
		1800	182/4TC	00318ET3E182TC-W22	$700	N1	96	1.25	3.91	89.5	15.860	230/460	
		1800	182/4TC	00318ET3H182TC-W22	$700	N1	98	1.25	3.13	89.5	15.860	575	
		1200	213/5TC	00312ET3E213TC-W22	$1,180	N1	166	1.25	4.41	89.5	19.517	230/460	
		900	213/5TC	00309ET3E215TC-W22	$2,166	N1	192	1.25	4.55	85.5	19.517	230/460	
5	3.7	3600	182/4TC	00536ET3E184TC-W22	$911	N1	110	1.25	5.90	88.5	15.860	230/460	
		3600	182/4TC	00536ET3H184TC-W22	$911	N1	109	1.25	4.72	88.5	15.860	575	
		1800	182/4TC	00518ET3E184TC-W22	$810	N1	107	1.25	6.45	89.5	15.860	230/460	
		1800	182/4TC	00518ET3H184TC-W22	$810	N1	108	1.25	5.16	89.5	15.860	575	
		1200	213/5TC	00512ET3E215TC-W22	$1,384	N1	183	1.25	6.83	89.5	19.517	230/460	
7.5	5.5	3600	182/4TC	00736ET3E184TC-W22	$1,112	N1	110	1.25	8.76	89.5	15.860	230/460	
		3600	182/4TC	00736ET3H184TC-W22	$1,112	N1	109	1.25	7.01	89.5	15.860	575	
		3600	213/5TC	00736ET3E213TC-W22	$1,177	N1	166	1.25	8.76	89.5	19.517	230/460	
		3600	213/5TC	00736ET3H213TC-W22	$1,177	N1	166	1.25	7.01	89.5	19.517	575	
		1800	213/5TC	00718ET3E213TC-W22	$1,141	N1	174	1.25	9.18	91.7	19.517	230/460	
		1800	213/5TC	00718ET3H213TC-W22	$1,141	N1	178	1.25	7.34	91.7	19.517	575	
		1200	254/6TC	00712ET3E254TC-W22	$2,134	N1	321	1.25	9.48	91.0	24.945	230/460	
		900	254/6TC	00709ET3E256TC-W22	$3,726	N1	341	1.25	11.1	87.5	24.945	230/460	
10	7.5	3600	213/5TC	01036ET3E215TC-W22	$1,383	N1	178	1.25	11.6	90.2	19.517	230/460	
		3600	213/5TC	01036ET3H215TC-W22	$1,383	N1	183	1.25	9.28	90.2	19.517	575	
		1800	213/5TC	01018ET3E215TC-W22	$1,325	N1	183	1.25	12.4	91.7	19.517	230/460	
		1800	213/5TC	01018ET3H215TC-W22	$1,325	N1	191	1.25	9.92	91.7	19.517	575	
		1200	254/6TC	01012ET3E256TC-W22	$2,465	N1	329	1.25	12.9	91.0	24.945	230/460	
15	11	3600	213/5TC	01536ET3E215TC-W22	$1,748	N1	187	1.25	17.0	91.0	19.517	230/460	
		3600	254/6TC	01536ET3E254TC-W22	$1,893	N1	295	1.25	17.2	91.0	24.945	230/460	
		3600	254/6TC	01536ET3H254TC-W22	$1,893	N1	302	1.25	13.8	91.0	24.945	575	
		1800	254/6TC	01518ET3E254TC-W22	$1,917	N1	340	1.25	18.0	92.4	24.945	230/460	
		1800	254/6TC	01518ET3H254TC-W22	$1,917	N1	351	1.25	14.4	92.4	24.945	575	
		1200	284/6TC	01512ET3E284TC-W22	$3,388	N1	430	1.25	17.9	91.7	27.929	230/460	
		1200	284/6TC	01512ET3H284TC-W22	$3,388	N1	428	1.25	14.3	91.7	27.929	575	

continued on next page

Please refer to back cover for description of "NOTES"

For detailed specifications, data sheets, drawings and performance curves visit http:// www.weg.net

Severe Duty - Three-Phase Motors

GENERAL PURPOSE

TEFC - C-Face - Foot Mount - *continued*

HP	kW	RPM	Frame	Catalog Number	List Price	Mult. Symbol	Approx. Shipping Weight (lbs)	Service Factor	FL Amps @ High	FL. Eff (%)	"C" Dimension (in)	Voltage (V)	Notes
20	15	3600	254/6TC	02036ET3E256TC-W22	$2,451	N1	318	1.25	23.2	91.0	24.945	230/460	
		3600	254/6TC	02036ET3H256TC-W22	$2,451	N1	327	1.25	18.6	91.0	24.945	575	
		1800	254/6TC	02018ET3E256TC-W22	$2,270	N1	389	1.25	24.1	93.0	24.945	230/460	
		1800	254/6TC	02018ET3H256TC-W22	$2,270	N1	401	1.25	19.3	93.0	24.945	575	
		1200	284/6TC	02012ET3E286TC-W22	$4,060	N1	457	1.25	24.2	91.7	27.929	230/460	
25	18.5	3600	284/6TSC	02536ET3E284TSC-W22	$3,096	N1	416	1.25	28.5	91.7	26.557	230/460	
		3600	284/6TSC	02536ET3H284TSC-W22	$3,096	N1	413	1.25	22.8	91.7	26.557	575	
		1800	284/6TC	02518ET3E284TC-W22	$2,840	N1	418	1.25	29.5	93.6	27.929	230/460	
		1800	284/6TC	02518ET3H284TC-W22	$2,840	N1	447	1.25	23.6	93.6	27.929	575	
		1200	324/6TC	02512ET3E324TC-W22	$4,858	N1	601	1.25	30.4	93.0	31.116	230/460	
30	22	3600	284/6TSC	03036ET3E286TSC-W22	$3,659	N1	433	1.25	33.8	91.7	26.557	230/460	
		3600	284/6TSC	03036ET3H286TSC-W22	$3,659	N1	433	1.25	27.0	91.7	26.557	575	
		1800	284/6TC	03018ET3E286TC-W22	$3,321	N1	466	1.25	35.1	93.6	27.929	230/460	
		1800	284/6TC	03018ET3H286TC-W22	$3,321	N1	484	1.25	28.1	93.6	27.929	575	
		1200	324/6TC	03012ET3E326TC-W22	$5,394	N1	645	1.25	36.2	93.0	31.116	230/460	
40	30	3600	324/6TSC	04036ET3E324TSC-W22	$4,845	N1	606	1.25	45.8	92.4	29.616	230/460	
		3600	324/6TSC	04036ET3H324TSC-W22	$4,845	N1	605	1.25	36.6	92.4	29.616	575	
		1800	324/6TSC	04018ET3E324TSC-W22	$4,300	N1	629	1.25	47.1	94.1	29.616	230/460	
		1800	324/6TC	04018ET3E324TC-W22	$4,300	N1	606	1.25	47.1	94.1	31.116	230/460	
		1800	324/6TC	04018ET3H324TC-W22	$4,300	N1	630	1.25	37.7	94.1	31.116	575	
		1200	364/5TC	04012ET3E364TC-W22	$7,576	N1	1032	1.25	46.5	94.1	34.251	230/460	
50	37	3600	324/6TSC	05036ET3E326TSC-W22	$5,437	N1	628	1.25	56.1	93.0	29.616	230/460	
		1800	324/6TSC	05018ET3E326TSC-W22	$5,221	N1	614	1.25	59.2	94.5	29.616	230/460	
		1800	324/6TC	05018ET3E326TC-W22	$5,221	N1	625	1.25	59.2	94.5	31.116	230/460	
		1800	324/6TC	05018ET3H326TC-W22	$5,221	N1	651	1.25	47.4	94.5	31.116	575	
		1200	364/5TC	05012ET3E365TC-W22	$8,960	N1	1048	1.25	57.4	94.1	34.251	230/460	
60	45	3600	364/5TSC	06036ET3E364TSC-W22	$7,994	N1	990	1.25	67.0	93.6	32.338	230/460	
		3600	364/5TSC	06036ET3H364TSC-W22	$7,994	N1	992	1.25	53.6	93.6	32.338	575	
		1800	364/5TC	06018ET3E364TC-W22	$7,831	N1	961	1.25	68.3	95.0	34.251	230/460	
		1800	364/5TC	06018ET3H364TC-W22	$7,831	N1	1060	1.25	54.6	95.0	34.251	575	
75	55	3600	364/5TSC	07536ET3E365TSC-W22	$9,533	N1	993	1.25	81.9	93.6	32.338	230/460	
		1800	364/5TC	07518ET3E365TC-W22	$9,148	N1	1024	1.25	84.1	95.4	34.251	230/460	
		1800	364/5TC	07518ET3H365TC-W22	$9,148	N1	1075	1.25	67.3	95.4	34.251	575	
		1200	404/5TC	07512ET3H405TC-W22	$12,549	N1	1337	1.25	67.9	94.5	39.730	575	
100	75	1800	404/5TSC	10018ET3E405TSC-W22	$12,179	N1	1256	1.25	111	95.4	36.732	230/460	
		1800	404/5TC	10018ET3E405TC-W22	$12,179	N1	1256	1.25	111	95.4	39.730	230/460	
		1800	404/5TC	10018ET3H405TC-W22	$12,179	N1	1318	1.25	88.8	95.4	39.730	575	
125	90	1800	444/5TSC	12518ET3G444TSC-W22	$16,218	N1	1759	1.15	139	95.4	41.407	460	
		1800	444/5TC	12518ET3E444TC-W22	$16,218	N1	1887	1.15	139	95.4	45.157	230/460	
		1800	444/5TC	12518ET3G444TC-W22	$16,218	N1	1851	1.15	139	95.4	45.157	460	
		1800	444/5TC	12518ET3H444TC-W22	$16,218	N1	1851	1.15	111	95.4	45.157	575	
150	110	1800	444/5TC	15018ET3E445TC-W22	$18,025	N1	1919	1.15	170	95.8	45.157	230/460	
		1800	444/5TC	15018ET3G445TC-W22	$18,025	N1	1997	1.15	170	95.8	45.157	460	

continued on next page

Please refer to back cover for description of "NOTES"

For detailed specifications, data sheets, drawings and performance curves visit http://www.weg.net

Data subject to change without notice.

TEFC - C-Face - Foot Mount - *continued*

HP	kW	RPM	Frame	Catalog Number	List Price	Mult. Symbol	Approx. Shipping Weight (lbs)	Service Factor	FL Amps @ High	FL. Eff (%)	"C" Dimension (in)	Voltage (V)	Notes
200	150	1800	445/7TC	20018ET3G447TC-W22	$21,704	N1	2523	1.15	230	96.2	48.701	460	
250	185	1800	445/7TSC	25018ET3G447TSC-W22	$34,280	N1	2361	1.15	281	96.2	44.951	460	
		1800	445/7TSC	25018ET3Q447TSC-W22	$27,322	N1	2836	1.15	281	96.2	44.951	460	
300	220	1800	447/9TC	30018ET3G449TC-W22	$31,990	N1	3069	1.15	330	96.2	56.338	460	

TEFC - C-Face - Footless

HP	kW	RPM	Frame	Catalog Number	List Price	Mult. Symbol	Approx. Shipping Weight (lbs)	Service Factor	FL Amps @ High	FL. Eff (%)	"C" Dimension (in)	Voltage (V)	Notes
1	0.75	3600	143TC	00136ET3ER143TC-W22	$577	N1	44	1.25	1.44	81.5	13.065	230/460	15
		1800	143TC	00118ET3ER143TC-W22	$572	N1	47	1.25	1.47	85.5	13.065	230/460	15
		1200	145TC	00112ET3ER145TC-W22	$655	N1	56	1.25	1.73	82.5	16.197	230/460	15
1.5	1.1	3600	143TC	00156ET3ER143TC-W22	$588	N1	48	1.25	1.96	84.0	13.065	230/460	15
		1800	145TC	00158ET3ER145TC-W22	$596	N1	55	1.25	2.02	86.5	14.077	230/460	15
		1200	182TC	00152ET3ER182TC-W22	$816	N1	100	1.25	2.54	87.5	16.197	230/460	15;39
2	1.5	3600	145TC	00236ET3ER145TC-W22	$638	N1	55	1.25	2.56	85.5	14.077	230/460	15
		1800	145TC	00218ET3ER145TC-W22	$659	N1	56	1.25	2.76	86.5	14.077	230/460	15
		1200	184TC	00212ET3ER184TC-W22	$883	N1	110	1.25	3.22	88.5	17.197	230/460	15;39
3	2.2	3600	145TC	00336ET3ER145TC-W22	$677	N1	58	1.25	3.71	86.5	14.077	230/460	15
		3600	182TC	00336ET3ER182TC-W22	$826	N1	108	1.25	3.63	86.5	16.197	230/460	15;39
		1800	182TC	00318ET3ER182TC-W22	$721	N1	104	1.25	3.91	89.5	16.197	230/460	15;39
		1200	213TC	00312ET3ER213TC-W22	$1,203	N1	154	1.25	4.41	89.5	19.399	230/460	15
5	3.7	3600	184TC	00536ET3ER184TC-W22	$938	N1	115	1.25	5.90	88.5	17.197	230/460	15
		1800	184TC	00518ET3ER184TC-W22	$834	N1	113	1.25	6.45	89.5	17.197	230/460	15
		1200	215TC	00512ET3ER215TC-W22	$1,426	N1	178	1.25	6.83	89.5	20.895	230/460	15
7.5	5.5	3600	213TC	00736ET3ER213TC-W22	$1,212	N1	155	1.25	8.76	89.5	19.399	230/460	15
		1800	213TC	00718ET3ER213TC-W22	$1,175	N1	167	1.25	9.18	91.7	19.399	230/460	15
10	7.5	3600	215TC	01036ET3ER215TC-W22	$1,424	N1	179	1.25	11.6	90.2	20.895	230/460	15
		1800	215TC	01018ET3ER215TC-W22	$1,366	N1	187	1.25	12.4	91.7	20.895	230/460	15
15	11	3600	254TC	01536ET3ER254TC-W22	$1,950	N1	300	1.25	17.2	91.0	25.063	230/460	15
		1800	254TC	01518ET3ER254TC-W22	$1,975	N1	348	1.25	18.0	92.4	25.063	230/460	15
20	15	3600	256TC	02036ET3ER256TC-W22	$2,525	N1	335	1.25	23.2	91.0	26.795	230/460	15
		1800	256TC	02018ET3ER256TC-W22	$2,338	N1	407	1.25	24.1	93.0	26.795	230/460	15
25	18.5	3600	284TSC	02536ET3ER284TSC-W22	$3,187	N1	406	1.25	28.5	91.7	27.305	230/460	15
		1800	284TC	02518ET3ER284TC-W22	$2,925	N1	441	1.25	29.5	93.6	28.677	230/460	15
30	22	3600	286TSC	03036ET3ER286TSC-W22	$3,767	N1	436	1.25	33.8	91.7	28.801	230/460	15
		1800	286TC	03018ET3ER286TC-W22	$3,421	N1	489	1.25	35.1	93.6	30.173	230/460	15
		1200	326TSC	03012ET3ER326TSC-W22	$5,768	N1	732	1.25	36.2	93.0	32.254	230/460	15
40	30	3600	324TSC	04036ET3ER324TSC-W22	$4,988	N1	684	1.25	45.8	92.4	30.758	230/460	15
		1800	324TC	04018ET3ER324TC-W22	$4,429	N1	613	1.25	47.1	94.1	32.258	230/460	15
50	37	1800	326TC	05018ET3ER326TC-W22	$5,378	N1	648	1.25	59.2	94.5	33.754	230/460	15
60	45	1800	364/5TC	06018ET3ER364TC-W22	$8,053	N1	869	1.25	68.3	95.0	37.440	230/460	15
75	55	1800	364/5TC	07518ET3ER365TC-W22	$9,408	N1	1256	1.25	84.1	95.4	37.440	230/460	15

Please refer to back cover for description of "NOTES"

For detailed specifications, data sheets, drawings and performance curves visit http:// www.weg.net

Severe Duty Three-Phase Motors

IEEE 841 - THREE PHASE

TEFC - NEMA Premium®

WEG's IEEE 841 motors are specially suited for Pulp & Paper mills, Steel mills, Petrochemical Plants and diverse demanding applications requiring severe duty long life motors.

WEG's W22 cast iron platform has a superior cooling system and solid feet for cool operation and lower vibration and noise extending the life of the motor.

Standard Features:

- Class F insulation (Impregnation Resin and magnet wire are class H)
- F1 Mounted (F2 convertible). Frames 447T and up can easily be F2 converted by simply rotating the terminal box adapter
- Stainless Steel Nameplate - Laser etched with high contrast background
- All frames with regreasable ball bearings
- Class I, Div. 2, Groups A, B, C & D – T3, Class II, Div 2, Groups F & G – T3C

***Inverter Rated:**
1000:1 for variable torque
20:1 for constant torque

** Frame 586/7 250HP and up 6:1 CT and 1000:1 VT*

** Insulated housing standard on L447/9T and above*

ADDITIONAL TECHNICAL DATA

ELECTRICAL DATA: B-12

MECHANICAL DATA: **B-68**

Features that make a difference:

- 1.25 Service Factor up to 100 HP
- InproSeal Bearing Isolators both ends
- Bearing protection meets IP56
- Rubber lead separator between terminal box and frame
- Vibration: 0.04 inches per second or less
- Guaranteed foot flatness to within 0.005"
- Bearing life 50,000 hours (L-10)
- Epoxy Paint system exceeds 250hrs Salt Fog test
- Interior surfaces are epoxy coated
- Non-sparking fan
- NPT Threaded terminal box
- Seamless copper lead lugs
- Seamless Stainless Steel grease extension tubes
- Automatic grease relief fittings
- IEEE 841 Test Report in conduit box
- Suitable for IEEE45 USCG 259 – Marine Duty

TEFC - Foot Mount

HP	kW	RPM	Frame	Catalog Number	List Price	Mult. Symbol	Approx. Shipping Weight (lbs)	Service Factor	FL Amps @ High	FL. Eff (%)	"C" Dimension (in)	Voltage (V)	Notes
1	0.75	1800	143/5T	00118ST3QIE143T-W22	$922	I1	58	1.25	1.47	85.5	13.358	460	
		1800	143/5T	00118ST3HIE143T-W22	$922	I1	58	1.25	1.18	85.5	13.358	575	
		1200	143/5T	00112ST3QIE145T-W22	$1,062	I1	66	1.25	1.73	82.5	13.358	460	
		1200	143/5T	00112ST3HIE145T-W22	$1,062	I1	66	1.25	1.38	82.5	13.358	575	
		900	182/4T	00109ST3QIE182T-W22	$2,006	I1	97	1.25	2.30	78.5	15.860	460	
1.5	1.1	3600	143/5T	00156ST3QIE143T-W22	$981	I1	59	1.25	1.96	84.0	13.358	460	
		3600	143/5T	00156ST3HIE143T-W22	$981	I1	43	1.25	1.57	84.0	13.358	575	
		1800	143/5T	00158ST3QIE145T-W22	$981	I1	63	1.25	2.02	86.5	13.358	460	
		1800	143/5T	00158ST3HIE145T-W22	$981	I1	63	1.25	1.62	86.5	13.358	575	
		1200	182/4T	00152ST3QIE182T-W22	$1,286	I1	108	1.25	2.54	87.5	15.860	460	
		1200	182/4T	00152ST3HIE182T-W22	$1,286	I1	74	1.25	2.03	87.5	15.860	575	
		900	182/4T	00159ST3QIE184T-W22	$2,016	I1	112	1.25	2.70	82.5	15.860	460	
2	1.5	3600	143/5T	00236ST3QIE145T-W22	$1,023	I1	64	1.25	2.56	85.5	13.358	460	
		3600	143/5T	00236ST3HIE145T-W22	$1,023	I1	64	1.25	2.05	85.5	13.358	575	
		1800	143/5T	00218ST3QIE145T-W22	$1,023	I1	64	1.25	2.76	86.5	13.358	460	
		1800	143/5T	00218ST3HIE145T-W22	$1,023	I1	64	1.25	2.21	86.5	13.358	575	
		1200	182/4T	00212ST3QIE184T-W22	$1,363	I1	113	1.25	3.22	88.5	15.860	460	
		1200	182/4T	00212ST3HIE184T-W22	$1,363	I1	114	1.25	2.58	88.5	15.860	575	39
		900	213/5T	00209ST3QIE213T-W22	$2,701	I1	154	1.25	3.39	85.5	19.517	460	
3	2.2	3600	182/4T	00336ST3QIE182T-W22	$1,267	I1	109	1.25	3.63	86.5	15.860	460	
		3600	182/4T	00336ST3HIE182T-W22	$1,267	I1	108	1.25	2.90	86.5	15.860	575	
		1800	182/4T	00318ST3QIE182T-W22	$1,224	I1	106	1.25	3.91	89.5	15.860	460	
		1800	182/4T	00318ST3HIE182T-W22	$1,224	I1	104	1.25	3.13	89.5	15.860	575	
		1200	213/5T	00312ST3QIE213T-W22	$1,537	I1	173	1.25	4.41	89.5	19.517	460	
		1200	213/5T	00312ST3HIE213T-W22	$1,537	I1	173	1.25	3.53	89.5	19.517	575	
		900	213/5T	00309ST3QIE215T-W22	$2,883	I1	199	1.25	4.55	85.5	19.517	460	
5	3.7	3600	182/4T	00536ST3QIE184T-W22	$1,429	I1	116	1.25	5.90	88.5	15.860	460	
		3600	182/4T	00536ST3HIE184T-W22	$1,429	I1	116	1.25	4.72	88.5	15.860	575	
		1800	182/4T	00518ST3QIE184T-W22	$1,371	I1	115	1.25	6.45	89.5	15.860	460	
		1800	182/4T	00518ST3HIE184T-W22	$1,371	I1	115	1.25	5.16	89.5	15.860	575	
		1200	213/5T	00512ST3QIE215T-W22	$1,901	I1	191	1.25	6.83	89.5	19.517	460	
		1200	213/5T	00512ST3HIE215T-W22	$1,901	I1	191	1.25	5.46	89.5	19.517	575	
		900	254/6T	00509ST3QIE254T-W22	$4,243	I1	306	1.25	7.58	87.5	24.945	460	
7.5	5.5	3600	213/5T	00736ST3QIE213T-W22	$1,751	I1	174	1.25	8.76	89.5	19.517	460	
		3600	213/5T	00736ST3HIE213T-W22	$1,751	I1	173	1.25	7.01	89.5	19.517	575	
		1800	213/5T	00718ST3QIE213T-W22	$1,646	I1	185	1.25	9.18	91.7	19.517	460	
		1800	213/5T	00718ST3HIE213T-W22	$1,646	I1	185	1.25	7.34	91.7	19.517	575	
		1200	254/6T	00712ST3QIE254T-W22	$2,544	I1	322	1.25	9.48	91.0	24.945	460	
		1200	254/6T	00712ST3HIE254T-W22	$2,544	I1	299	1.25	7.58	91.0	24.945	575	
		900	254/6T	00709ST3QIE256T-W22	$5,040	I1	321	1.25	11.1	87.5	24.945	460	

continute on next page

Please refer to back cover for description of "NOTES"

For detailed specifications, data sheets, drawings and performance curves visit http://www.weg.net

IEEE 841

TEFC - Foot Mount - *continued*

HP	kW	RPM	Frame	Catalog Number	List Price	Mult. Symbol	Approx. Shipping Weight (lbs)	Service Factor	FL Amps @ High	FL. Eff (%)	"C" Dimension (in)	Voltage (V)	Notes
10	7.5	3600	213/5T	01036ST3QIE215T-W22	$1,920	I1	191	1.25	11.6	90.2	19.517	460	
		3600	213/5T	01036ST3HIE215T-W22	$1,920	I1	191	1.25	9.28	90.2	19.517	575	
		1800	213/5T	01018ST3QIE215T-W22	$1,760	I1	188	1.25	12.4	91.7	19.517	460	
		1800	213/5T	01018ST3HIE215T-W22	$1,760	I1	199	1.25	9.92	91.7	19.517	575	
		1200	254/6T	01012ST3QIE256T-W22	$2,834	I1	329	1.25	12.9	91.0	24.945	460	
		1200	254/6T	01012ST3HIE256T-W22	$2,834	I1	329	1.25	10.3	91.0	24.945	575	
		900	284/6T	01009ST3QIE284T-W22	$5,936	I1	380	1.25	13.4	90.2	27.929	460	
15	11	3600	254/6T	01536ST3QIE254T-W22	$2,428	I1	303	1.25	17.2	91.0	24.945	460	
		3600	254/6T	01536ST3HIE254T-W22	$2,428	I1	303	1.25	13.8	91.0	24.945	575	
		1800	254/6T	01518ST3QIE254T-W22	$2,257	I1	341	1.25	18.0	92.4	24.945	460	
		1800	254/6T	01518ST3HIE254T-W22	$2,257	I1	351	1.25	14.4	92.4	24.945	575	
		1200	284/6T	01512ST3QIE284T-W22	$4,203	I1	430	1.25	17.9	91.7	27.929	460	
		1200	284/6T	01512ST3HIE284T-W22	$4,203	I1	425	1.25	14.3	91.7	27.929	575	
		900	284/6T	01509ST3QIE286T-W22	$6,742	I1	437	1.25	19.4	90.2	27.929	460	
20	15	3600	254/6T	02036ST3QIE256T-W22	$2,957	I1	329	1.25	23.2	91.0	24.945	460	
		3600	254/6T	02036ST3HIE256T-W22	$2,957	I1	328	1.25	18.6	91.0	24.945	575	
		1800	254/6T	02018ST3QIE256T-W22	$2,597	I1	385	1.25	24.1	93.0	24.945	460	
		1800	254/6T	02018ST3HIE256T-W22	$2,597	I1	400	1.25	19.3	93.0	24.945	575	
		1200	284/6T	02012ST3QIE286T-W22	$4,773	I1	456	1.25	24.2	91.7	27.929	460	
		1200	284/6T	02012ST3HIE286T-W22	$4,773	I1	456	1.25	19.4	91.7	27.929	575	
		900	324/6T	02009ST3QIE324T-W22	$8,269	I1	551	1.25	28.3	91.0	31.116	460	
25	18.5	3600	284/6TS	02536ST3QIE284TS-W22	$3,368	I1	413	1.25	28.5	91.7	26.557	460	
		3600	284/6TS	02536ST3HIE284TS-W22	$3,368	I1	403	1.25	22.8	91.7	26.557	575	
		1800	284/6T	02518ST3QIE284T-W22	$2,926	I1	448	1.25	29.5	93.6	27.929	460	
		1800	284/6T	02518ST3HIE284T-W22	$2,926	I1	447	1.25	23.6	93.6	27.929	575	
		1200	324/6T	02512ST3QIE324T-W22	$5,211	I1	588	1.25	30.4	93.0	31.116	460	
		1200	324/6T	02512ST3HIE324T-W22	$5,211	I1	587	1.25	24.3	93.0	31.116	575	
		900	324/6T	02509ST3QIE326T-W22	$8,838	I1	596	1.25	35.9	91.0	31.116	460	
30	22	3600	284/6TS	03036ST3QIE286TS-W22	$3,799	I1	433	1.25	33.8	91.7	26.557	460	
		3600	284/6TS	03036ST3HIE286TS-W22	$3,799	I1	433	1.25	27.0	91.7	26.557	575	
		1800	284/6T	03018ST3QIE286T-W22	$3,509	I1	454	1.25	35.1	93.6	27.929	460	
		1800	284/6T	03018ST3HIE286T-W22	$3,509	I1	484	1.25	28.1	93.6	27.929	575	
		1200	324/6T	03012ST3QIE326T-W22	$5,359	I1	633	1.25	35.8	93.0	31.116	460	
		1200	324/6T	03012ST3HIE326T-W22	$5,359	I1	632	1.25	28.6	93.0	31.116	575	
		900	364/5T	03009ST3QIE364T-W22	$13,149	I1	900	1.25	37.0	92.4	34.251	460	
40	30	3600	324/6TS	04036ST3QIE324TS-W22	$5,306	I1	591	1.25	45.8	92.4	29.616	460	
		3600	324/6TS	04036ST3HIE324TS-W22	$5,306	I1	591	1.25	36.6	92.4	29.616	575	
		1800	324/6T	04018ST3QIE324T-W22	$4,692	I1	590	1.25	47.1	94.1	31.116	460	
		1800	324/6T	04018ST3HIE324T-W22	$4,692	I1	617	1.25	37.7	94.1	31.116	575	
		1200	364/5T	04012ST3QIE364T-W22	$8,636	I1	1007	1.25	46.5	94.1	34.251	460	
		1200	364/5T	04012ST3HIE364T-W22	$8,636	I1	1003	1.25	37.2	94.1	34.251	575	
		900	364/5T	04009ST3QIE365T-W22	$14,909	I1	955	1.25	50.3	92.4	34.251	460	

continued on next page

Please refer to back cover for description of "NOTES"

For detailed specifications, data sheets, drawings and performance curves visit http:// www.weg.net

Data subject to change without notice.

TEFC - Foot Mount - *continued*

HP	kW	RPM	Frame	Catalog Number	List Price	Mult. Symbol	Approx. Shipping Weight (lbs)	Service Factor	FL Amps @ High	FL. Eff (%)	"C" Dimension (in)	Voltage (V)	Notes
50	37	3600	324/6TS	05036ST3QIE326TS-W22	$5,970	I1	613	1.25	56.1	93.0	29.616	460	
		3600	324/6TS	05036ST3HIE326TS-W22	$5,970	I1	612	1.25	44.9	93.0	29.616	575	
		1800	324/6T	05018ST3QIE326T-W22	$5,233	I1	610	1.25	59.2	94.5	31.116	460	
		1800	324/6T	05018ST3HIE326T-W22	$5,233	I1	636	1.25	47.4	94.5	31.116	575	
		1200	364/5T	05012ST3QIE365T-W22	$9,369	I1	1022	1.25	57.4	94.1	34.251	460	
		1200	364/5T	05012ST3HIE365T-W22	$9,369	I1	1019	1.25	45.9	94.1	34.251	575	
		900	404/5T	05009ST3QIE404T-W22	$19,331	I1	1214	1.25	60.0	93.0	39.730	460	
60	45	3600	364/5TS	06036ST3QIE364TS-W22	$8,665	I1	965	1.25	67.0	93.6	32.338	460	
		3600	364/5TS	06036ST3HIE364TS-W22	$8,665	I1	963	1.25	53.6	93.6	32.338	575	
		1800	364/5T	06018ST3QIE364T-W22	$8,044	I1	957	1.25	68.3	95.0	34.251	460	
		1800	364/5T	06018ST3HIE364T-W22	$8,044	I1	1030	1.25	54.6	95.0	34.251	575	
		1200	404/5T	06012ST3QIE404T-W22	$11,790	I1	1253	1.25	69.5	94.5	39.730	460	
		1200	404/5T	06012ST3HIE404T-W22	$11,790	I1	1249	1.25	55.6	94.5	39.730	575	
		900	404/5T	06009ST3QIE405T-W22	$22,579	I1	1261	1.25	73.0	93.0	39.730	460	
75	55	3600	364/5TS	07536ST3QIE365TS-W22	$10,210	I1	1012	1.25	81.9	93.6	32.338	460	
		3600	364/5TS	07536ST3HIE365TS-W22	$10,210	I1	972	1.25	65.5	93.6	32.338	575	
		1800	364/5T	07518ST3QIE365T-W22	$9,289	I1	996	1.25	84.1	95.4	34.251	460	
		1800	364/5T	07518ST3HIE365T-W22	$9,289	I1	1045	1.25	67.3	95.4	34.251	575	
		1200	404/5T	07512ST3QIE405T-W22	$12,866	I1	1317	1.25	84.9	94.5	39.730	460	
		1200	404/5T	07512ST3QIERB405T-W2	$12,866	I1	1326	1.25	84.9	94.5	39.730	460	14
		1200	404/5T	07512ST3HIE405T-W22	$12,866	I1	1298	1.25	67.9	94.5	39.730	575	
		900	444/5T	07509ST3QIE444T-W22	$23,457	I1	1666	1.25	93.0	93.6	44.950	460	
100	75	3600	404/5TS	10036ST3QIE405TS-W22	$12,806	I1	1182	1.25	110	94.1	36.732	460	
		3600	404/5TS	10036ST3HIE405TS-W22	$12,806	I1	1191	1.25	88.0	94.1	36.732	575	
		1800	404/5T	10018ST3QIE405T-W22	$12,471	I1	1276	1.25	116	95.4	39.730	460	
		1800	404/5T	10018ST3QIERB405T-W2	$12,471	I1	1292	1.25	116	95.4	39.730	460	14
		1800	404/5T	10018ST3HIE405T-W22	$12,471	I1	1339	1.25	92.8	95.4	39.730	575	
		1800	404/5T	10018ST3HIERB405T-W2	$12,471	I1	1348	1.25	92.8	95.4	39.730	575	14
		1200	444/5T	10012ST3QIE444T-W22	$17,933	I1	1800	1.25	121	95.0	44.950	460	
		1200	444/5T	10012ST3QIERB444T-W2	$17,933	I1	1915	1.25	121	95.0	44.950	460	14
		1200	444/5T	10012ST3HIE444T-W22	$17,933	I1	1900	1.25	96.8	95.0	44.950	575	
		900	444/5T	10009ST3QIE445T-W22	$24,681	I1	1944	1.25	127	94.1	44.950	460	
		900	444/5T	10009ST3QIERB445T-W2	$24,681	I1	1763	1.25	127	94.1	44.950	460	14
125	90	3600	444/5TS	12536ST3QIE444TS-W22	$18,198	I1	1805	1.15	134	95.0	41.200	460	
		3600	444/5TS	12536ST3HIE444TS-W22	$18,198	I1	1796	1.15	107	95.0	41.200	575	
		1800	444/5T	12518ST3QIE444T-W22	$16,564	I1	1708	1.15	139	95.4	44.950	460	
		1800	444/5T	12518ST3QIERB444T-W2	$16,564	I1	1836	1.15	139	95.4	44.950	460	14
		1800	444/5T	12518ST3HIE444T-W22	$16,564	I1	1822	1.15	111	95.4	44.950	575	
		1200	444/5T	12512ST3QIE445T-W22	$20,158	I1	2016	1.15	143	95.0	44.950	460	
		1200	444/5T	12512ST3QIERB445T-W2	$20,158	I1	2028	1.15	143	95.0	44.950	460	14
		1200	444/5T	12512ST3HIE445T-W22	$20,158	I1	2013	1.15	114	95.0	44.950	575	
		900	445/7T	12509ST3QIE447T-W22	$29,733	I1	2239	1.15	151	94.5	48.701	460	
		900	445/7T	12509ST3QIERB447T-W2	$29,733	I1	2273	1.15	151	94.5	48.701	460	14

continued on next page

Please refer to back cover for description of "NOTES"

For detailed specifications, data sheets, drawings and performance curves visit http://www.weg.net

Severe Duty - Three-Phase Motors

IEEE 841

TEFC - Foot Mount - *continued*

HP	kW	RPM	Frame	Catalog Number	List Price	Mult. Symbol	Approx. Shipping Weight (lbs)	Service Factor	FL Amps @ High	FL. Eff (%)	"C" Dimension (in)	Voltage (V)	Notes
150	110	3600	444/5TS	15036ST3QIE445TS-W22	$21,433	I1	1900	1.15	161	95.0	41.200	460	
		3600	444/5TS	15036ST3HIE445TS-W22	$21,433	I1	1908	1.15	129	95.0	41.200	575	
		1800	444/5T	15018ST3QIE445T-W22	$18,587	I1	1910	1.15	170	95.8	44.950	460	
		1800	444/5T	15018ST3QIERB445T-W2	$18,587	I1	2041	1.15	170	95.8	44.950	460	14
		1800	444/5T	15018ST3HIE445T-W22	$18,587	I1	2027	1.15	136	95.8	44.950	575	
		1800	444/5T	15018ST3HIERB445T-W2	$18,587	I1	2038	1.15	136	95.8	44.950	575	14
		1200	445/7T	15012ST3QIE447T-W22	$23,181	I1	2511	1.15	176	95.8	48.701	460	
		1200	445/7T	15012ST3QIERB447T-W2	$23,181	I1	2543	1.15	176	95.8	48.701	460	14
		1200	445/7T	15012ST3HIE447T-W22	$23,181	I1	2531	1.15	141	95.8	48.701	575	
		900	445/7T	15009ST3QIE447T-W22	$34,755	I1	2409	1.15	185	94.5	48.701	460	
		900	445/7T	15009ST3QIERB447T-W2	$34,755	I1	2421	1.15	185	94.5	48.701	460	14
200	150	3600	445/7TS	20036ST3QIE447TS-W22	$28,568	I1	2240	1.15	219	95.4	44.951	460	
		3600	445/7TS	20036ST3HIE447TS-W22	$28,568	I1	2209	1.15	175	95.4	44.951	575	
		1800	445/7T	20018ST3QIE447T-W22	$23,696	I1	2320	1.15	230	96.2	48.701	460	
		1800	445/7T	20018ST3QIERB447T-W2	$23,696	I1	2520	1.15	230	96.2	48.701	460	14
		1800	445/7T	20018ST3HIE447T-W22	$23,696	I1	2502	1.15	184	96.2	48.701	575	
		1200	447/9T	20012ST3QIE449T-W22	$27,577	I1	2978	1.15	237	95.8	56.338	460	
		1200	447/9T	20012ST3QIERB449T-W2	$27,557	I1	3052	1.15	237	95.8	56.338	460	14
		1200	447/9T	20012ST3HIE449T-W22	$27,577	I1	3030	1.15	190	95.8	56.338	575	
		1200	447/9T	20012ST3HIERB449T-W2	$27,557	I1	3046	1.15	190	95.8	56.338	575	14
		900	L447/9T	20009ST3QIE449T-W22	$57,394	I1	3655	1.15	242	95.0	57.181	460	43
		900	L447/9T	20009ST3QIERB449T-W2	$57,394	I1	3669	1.15	242	95.0	57.181	460	14;43
		900	L447/9T	20009ST3HIE449T-W22	$57,394	I1	3569	1.15	194	95.0	57.181	575	43
250	185	3600	447/9TS	25036ST3QIE449TS-W22	$34,663	I1	2603	1.15	266	95.8	52.940	460	
		1800	447/9T	25018ST3QIE449T-W22	$30,081	I1	2904	1.15	281	96.2	56.338	460	
		1800	447/9T	25018ST3QIERB449T-W2	$30,081	I1	2869	1.15	281	96.2	56.338	460	14
		1200	447/9T	25012ST3QIE449T-W22	$39,415	I1	3190	1.15	292	95.8	56.338	460	
		1200	447/9T	25012ST3QIERB449T-W2	$39,415	I1	2702	1.15	292	95.8	56.338	460	14
300	220	1800	447/9T	30018ST3QIE449T-W22	$36,810	I1	3102	1.15	330	96.2	56.338	460	
		1800	447/9T	30018ST3QIERB449T-W2	$36,810	I1	3130	1.15	330	96.2	56.338	460	14
		1200	L447/9T	30012ST3QIE449T-W22	$44,648	I1	3645	1.15	351	95.8	57.181	460	43
		1200	L447/9T	30012ST3QIERB449T-W2	$44,648	I1	3571	1.15	351	95.8	57.181	460	14;43
350	260	1800	L447/9T	35018ST3QIE449T-W22	$44,105	I1	3580	1.15	394	96.2	57.181	460	43
		1800	L447/9T	35018ST3QIERB449T-W2	$44,105	I1	3580	1.15	394	96.2	57.181	460	14;43
		1200	L447/9T	35012ST3QIE449T-W22	$52,634	I1	3824	1.15	415	95.8	57.181	460	43, 37
		1200	L447/9T	35012ST3QIERB449T-W2	$52,634	I1	3756	1.15	415	95.8	57.181	460	14;43
400	300	1800	L447/9T	40018ST3QIE449T-W22	$48,396	I1	3467	1.15	455	96.2	57.181	460	43
		1800	L447/9T	40018ST3QIERB449T-W2	$48,396	I1	3467	1.15	455	96.2	57.181	460	14;43

Please refer to back cover for description of "NOTES"

For detailed specifications, data sheets, drawings and performance curves visit http:// www.weg.net

Data subject to change without notice.

TEFC - C-Face - Foot Mount

HP	kW	RPM	Frame	Catalog Number	List Price	Mult. Symbol	Approx. Shipping Weight (lbs)	Service Factor	FL Amps @ High	FL. Eff (%)	"C" Dimension (in)	Voltage (V)	Notes
1	0.75	1800	143/5TC	00118ST3QIE143TC-W22	$972	I1	55	1.25	1.47	85.5	13.358	460	
		1200	143/5TC	00112ST3QIE145TC-W22	$1,112	I1	63	1.25	1.73	82.5	13.358	460	
1.5	1.1	3600	143/5TC	00156ST3QIE143TC-W22	$1,031	I1	57	1.25	1.96	84.0	13.358	460	
		1800	143/5TC	00158ST3QIE145TC-W22	$1,031	I1	61	1.25	2.02	86.5	13.358	460	
		1200	182/4TC	00152ST3QIE182TC-W22	$1,351	I1	112	1.25	2.54	87.5	15.860	460	
		900	182/4TC	00159ST3QIE184TC-W22	$2,081	I1	116	1.25	2.70	82.5	15.860	460	
2	1.5	3600	143/5TC	00236ST3QIE145TC-W22	$1,073	I1	62	1.25	2.56	85.5	13.358	460	
		1800	143/5TC	00218ST3QIE145TC-W22	$1,073	I1	62	1.25	2.76	86.5	13.358	460	
		1200	182/4TC	00212ST3QIE184TC-W22	$1,428	I1	117	1.25	3.22	88.5	15.860	460	39
		900	213/5TC	00209ST3QIE213TC-W22	$2,781	I1	185	1.25	3.39	85.5	19.517	460	
3	2.2	3600	182/4TC	00336ST3QIE182TC-W22	$1,332	I1	113	1.25	3.63	86.5	15.860	460	
		1800	182/4TC	00318ST3QIE182TC-W22	$1,289	I1	109	1.25	3.91	89.5	15.860	460	
		1200	213/5TC	00312ST3QIE213TC-W22	$1,617	I1	178	1.25	4.41	89.5	19.517	460	
		900	213/5TC	00309ST3QIE215TC-W22	$2,963	I1	181	1.25	4.55	85.5	19.517	460	
5	3.7	3600	182/4TC	00536ST3QIE184TC-W22	$1,494	I1	120	1.25	5.90	88.5	15.860	460	
		1800	182/4TC	00518ST3QIE184TC-W22	$1,436	I1	119	1.25	6.45	89.5	15.860	460	
		1200	213/5TC	00512ST3QIE215TC-W22	$1,981	I1	194	1.25	6.83	89.5	19.517	460	
		900	254/6TC	00509ST3QIE254TC-W22	$4,363	I1	309	1.25	7.58	87.5	24.945	460	
7.5	5.5	3600	213/5TC	00736ST3QIE213TC-W22	$1,831	I1	177	1.25	8.76	89.5	19.517	460	
		1800	213/5TC	00718ST3QIE213TC-W22	$1,726	I1	189	1.25	9.18	91.7	19.517	460	
		1200	254/6TC	00712ST3QIE254TC-W22	$2,664	I1	325	1.25	9.48	91.0	24.945	460	
		900	254/6TC	00709ST3QIE256TC-W22	$5,160	I1	321	1.25	11.1	87.5	24.945	460	
10	7.5	3600	213/5TC	01036ST3QIE215TC-W22	$2,000	I1	195	1.25	11.6	90.2	19.517	460	
		1800	213/5TC	01018ST3QIE215TC-W22	$1,840	I1	203	1.25	12.4	91.7	19.517	460	
		1200	254/6TC	01012ST3QIE256TC-W22	$2,954	I1	340	1.25	12.9	91.0	24.945	460	
		900	284/6TC	01009ST3QIE284TC-W22	$6,136	I1	400	1.25	13.4	90.2	27.929	460	
15	11	3600	254/6TC	01536ST3QIE254TC-W22	$2,548	I1	306	1.25	17.2	91.0	24.945	460	
		1800	254/6TC	01518ST3QIE254TC-W22	$2,377	I1	355	1.25	18.0	92.4	24.945	460	
		1200	284/6TC	01512ST3QIE284TC-W22	$4,403	I1	434	1.25	17.9	91.7	27.929	460	
		900	284/6TC	01509ST3QIE286TC-W22	$6,942	I1	444	1.25	19.4	90.2	27.929	460	
20	15	3600	254/6TC	02036ST3QIE256TC-W22	$3,077	I1	332	1.25	23.2	91.0	24.945	460	
		1800	254/6TC	02018ST3QIE256TC-W22	$2,717	I1	404	1.25	24.1	93.0	24.945	460	
		1200	284/6TC	02012ST3QIE286TC-W22	$4,973	I1	465	1.25	24.2	91.7	27.929	460	
		900	324/6TC	02009ST3QIE324TC-W22	$8,494	I1	482	1.25	28.3	91.0	31.116	460	
25	18.5	3600	284/6TSC	02536ST3QIE284TSC-W2	$3,568	I1	389	1.25	28.5	91.7	26.557	460	
		1800	284/6TC	02518ST3QIE284TC-W22	$3,126	I1	456	1.25	29.5	93.6	27.929	460	
		1200	324/6TC	02512ST3QIE324TC-W22	$5,436	I1	603	1.25	30.4	93.0	31.116	460	
		900	324/6TC	02509ST3QIE326TC-W22	$9,063	I1	539	1.25	35.9	91.0	31.116	460	
30	22	3600	284/6TSC	03036ST3QIE286TSC-W2	$3,999	I1	441	1.25	33.8	91.7	26.557	460	
		1800	284/6TC	03018ST3QIE286TC-W22	$3,709	I1	493	1.25	35.1	93.6	27.929	460	
		1200	324/6TC	03012ST3QIE326TC-W22	$5,584	I1	646	1.25	35.8	93.0	31.116	460	
		900	364/5TC	03009ST3QIE364TC-W22	$13,524	I1	917	1.25	37.0	92.4	34.251	460	

continued on next page

Please refer to back cover for description of "NOTES"

For detailed specifications, data sheets, drawings and performance curves visit http://www.weg.net

IEEE 841

TEFC - C-Face - Foot Mount - *continued*

HP	kW	RPM	Frame	Catalog Number	List Price	Mult. Symbol	Approx. Shipping Weight (lbs)	Service Factor	FL Amps @ High	FL. Eff (%)	"C" Dimension (in)	Voltage (V)	Notes
40	30	3600	324/6TSC	04036ST3QIE324TSC-W2	$5,531	I1	602	1.25	45.8	92.4	29.616	460	
		1800	324/6TC	04018ST3QIE324TC-W22	$4,917	I1	633	1.25	47.1	94.1	31.116	460	
		1200	364/5TC	04012ST3QIE364TC-W22	$9,011	I1	1032	1.25	46.5	94.1	34.251	460	
		900	364/5TC	04009ST3QIE365TC-W22	$15,284	I1	990	1.25	50.3	92.4	34.251	460	
50	37	3600	324/6TSC	05036ST3QIE326TSC-W2	$6,195	I1	627	1.25	56.1	93.0	29.616	460	
		1800	324/6TC	05018ST3QIE326TC-W22	$5,458	I1	651	1.25	59.2	94.5	31.116	460	
		1200	364/5TC	05012ST3QIE365TC-W22	$9,744	I1	983	1.25	57.4	94.1	34.251	460	
		900	404/5TC	05009ST3QIE404TC-W22	$19,856	I1	1132	1.25	60.0	93.0	39.730	460	
60	45	1200	404/5TC	06012ST3QIE404TC-W22	$12,315	I1	1156	1.25	69.5	94.5	39.730	460	

TEFC - C-Face - Footless

HP	kW	RPM	Frame	Catalog Number	List Price	Mult. Symbol	Approx. Shipping Weight (lbs)	Service Factor	FL Amps @ High	FL. Eff (%)	"C" Dimension (in)	Voltage (V)	Notes
1	0.75	1800	143/5TC	00118ST3QIER143TC-W2	$1,000	I1	54	1.25	1.47	85.5	14.066	460	15
1.5	1.1	1800	143/5TC	00158ST3QIER145TC-W2	$1,061	I1	62	1.25	2.02	86.5	14.066	460	15
2	1.5	1800	143/5TC	00218ST3QIER145TC-W2	$1,104	I1	63	1.25	2.76	86.5	14.066	460	15
3	2.2	1800	182/4TC	00318ST3QIER182TC-W2	$1,326	I1	110	1.25	3.91	89.5	17.080	460	15;39
5	3.7	1800	182/4TC	00518ST3QIER184TC-W2	$1,478	I1	119	1.25	6.45	89.5	17.080	460	15
7.5	5.5	1800	213/5TC	00718ST3QIER213TC-W2	$1,776	I1	177	1.25	9.18	91.7	21.269	460	15
10	7.5	1800	213/5TC	01018ST3QIER215TC-W2	$1,893	I1	192	1.25	12.4	91.7	21.269	460	15

Please refer to back cover for description of "NOTES"

For detailed specifications, data sheets, drawings and performance curves visit http:// www.weg.net

Data subject to change without notice.

W22 IEEE841 Severe Duty Motors

1-500HP

The WEG W22 product is the latest generation of Severe Duty Cast Iron frame industrial motors designed to meet the demands of Reliability, Efficiency, and Total Cost of Ownership todays' customers demand, and have come to expect from WEG.

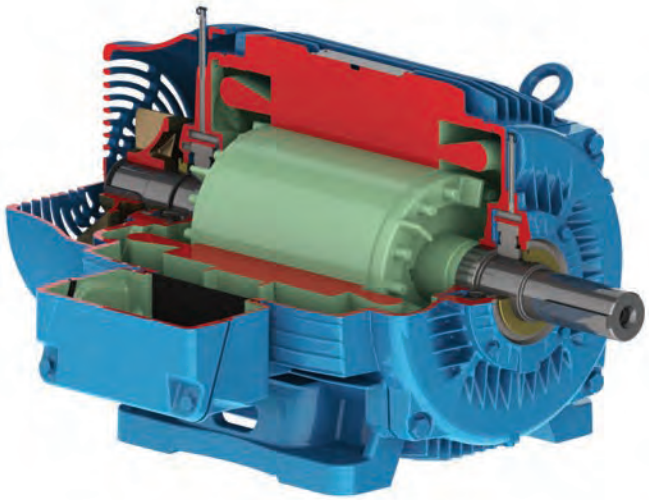

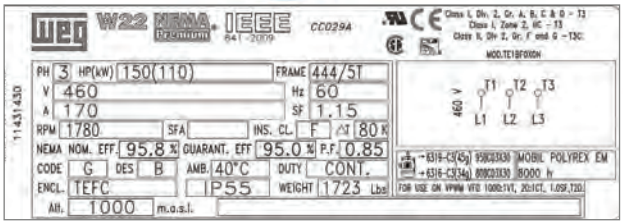

Standard Features

- Heavy Duty FC200 Cast Iron Frame Brackets, Conduit Box and Fan Cover
- Motor rated IP55
- InproSeal VBXX seals rated IP56 on both bearings
- C4 coated Silicon core steel withstands >500C burnout temps for superior repairability
- Dual drilled mounting Feet for increased flexibility
- Foot flatness of <.005" and paint free feet aid mounting and alignment
- Regreasable ball bearings with WEG Positive Pressure Lubrication System (PPLS) including Cast Iron bearing caps, Seamless Stainless Steel grease inlet extensions, and Auto grease relief
- Forged shouldered eyebolts for safe handling (180T and above)
- Stainless Steel automatic condensate Drains in both endshields
- 4-Bolts Conduit Box and Cover with Neoprene gaskets for sure seal
- VFD Rated Class F insulation system per NEMA MG1 Part 31 utilizing Class H Varnish and Magnet wire
- Stainless Steel Nameplate includes Weight, Division 2, and lubrication information
- IEEE 841 Test report with Vibration data included in the conduit box

Features That Make a Difference:

- Low Vibration design .04 in/sec (1/2 IEEE 841 Spec)
- C4 Coated Silicon Core Steel
- Highest Service Factor in the industry 1.25SF on <125HP
- Bearings meet IP56 with InproSeal VBXX on both ends
- Epoxy Paint system exceeds 250Hrs Salt spay per ASTMB117

Custom features and options available as factory modifications as well as many stock modifications for quick delivery

Please contact your authorized WEG distributor or go to **weg.net/us** for further information or additional specifications. **1-800-ASK-4WEG**

www.weg.net/us

Severe Duty – Three-Phase Motors

CRUSHER DUTY

TEFC - NEMA Premium®

Designed for the most demanding crusher applications. These motors are designed for horizontal and vertical mounting and have exceptional high starting and breakdown torques.

WEG's W22 cast iron platform has a superior cooling system and solid feet for cool operation and low vibration and noise, extending the life of the motor.

Standard Features:

- 50/60 Hz rated (380V on Nameplate - 400/415 available)
- Rated 50Hz at same Horsepower up to 250HP 1.0 Service Factor for 2, 4 & 6 Pole motors
- Class F insulation (Impregnation Resin and Magnet wire are class H)
- NEMA design A. All ratings exceed NEMA design C torque
- F1 Mounted (F2 convertible). Frames 447T and up can easily be F2 converted by simply rotating the terminal box adapter
- Stainless Steel Nameplate - Laser etched with high contrast background
- Gasketed conduit box
- Regreasable bearings
- Largest diameter shafts ("Z" frames) for the highest load ratings in the industry
- Labyrinth seal on both ends - 580Z and 586/7T
- Class I, Div. 2, Groups A, B, C & D – T3, Class II, Div 2, Groups F & G – T3C

Features that make a difference:

- Oversized Roller bearings
- Versatile starting methods - capable of wye/delta, across the line and part winding (12 leads) start.
- NPT Threaded terminal box

***Inverter Rated:**
1000:1 for variable torque
20:1 for constant torque

** Insulated housing standard on L447/9T and above*

ADDITIONAL TECHNICAL DATA

ELECTRICAL DATA: CONTACT WEG OR VISIT WWW.WEG.NET

MECHANICAL DATA: **B-68**

TEFC - Foot Mount

HP	kW	RPM	Frame	Catalog Number	List Price	Mult. Symbol	Approx. Shipping Weight (lbs)	Service Factor	FL Amps @ High	FL. Eff (%)	"C" Dimension (in)	Voltage (V)	Notes
50	37	900	404/5T	05009ET3EKD404T-W22	$17,648	K1	1483	1.25	60.0	93.0	39.730	230/460	14
60	45	1200	404/5T	06012ET3ERB404T-W22	$10,497	N1	1262	1.25	69.5	94.5	39.730	230/460	14
		900	404/5T	06009ET3EKD405T-W22	$20,443	K1	1273	1.15	73.0	93.0	39.730	230/460	14
75	55	1200	404/5T	07512ET3ERB405T-W22	$12,058	N1	1262	1.25	84.9	94.5	39.730	230/460	14
		1200	404/5T	07512ET3GRB405T-W22	$12,058	N1	1309	1.25	84.9	94.5	39.730	460	14
		900	444/5T	07509ET3GKD444T-W22	$23,334	K1	2143	1.25	93.0	93.6	45.157	460	14
		900	444/5T	07509ET3QRB444TF2-W2	$23,334	N1	1707	1.25	93.0	93.6	45.157	460	14
100	75	1800	404/5T	10018ET3ERB405T-W22	$11,689	N1	1239	1.25	111	95.4	39.730	230/460	14
		1800	404/5T	10018ET3GRB405T-W22	$11,689	N1	1199	1.25	111	95.4	39.730	460	14
		1800	404/5T	10018ET3HRB405T-W22	$11,689	N1	1294	1.25	88.8	95.4	39.730	575	14
		1200	444/5T	10012ET3ERB444T-W22	$15,631	N1	1859	1.25	121	95.0	45.157	230/460	14
		1200	444/5T	10012ET3GRB444T-W22	$15,631	N1	1854	1.25	121	95.0	45.157	460	14
		900	444/5T	10009ET3GKD445T-W22	$26,988	K1	1952	1.25	127	94.1	45.157	460	14
125	90	1800	444/5T	12518ET3ERB444T-W22	$14,748	N1	1730	1.15	139	95.4	45.157	230/460	14
		1800	444/5T	12518ET3GRB444T-W22	$14,748	N1	1736	1.15	139	95.4	45.157	460	14
		1200	444/5T	12512ET3ERB445T-W22	$17,947	N1	1993	1.15	143	95.0	45.157	230/460	14
		1200	444/5T	12512ET3GRB445T-W22	$17,947	N1	1996	1.15	143	95.0	45.157	460	14
		900	445/7T	12509ET3GKD447T-W22	$28,175	K1	2287	1.15	151	94.5	48.701	460	14
150	110	1800	444/5T	15018ET3GRB445T-W22	$17,420	N1	1853	1.15	170	95.8	45.157	460	14
		1800	444/5T	15018ET3HRB445T-W22	$17,420	N1	2034	1.15	136	95.8	45.157	575	14
		1200	445/7T	15012ET3GRB447T-W22	$20,639	N1	2371	1.15	176	95.8	48.701	460	14
		900	445/7T	15009ET3GKD447T-W22	$30,677	K1	2457	1.15	185	94.5	48.701	460	14;19
200	150	1800	445/7T	20018ET3GRB447T-W22	$21,098	N1	2209	1.15	230	96.2	48.701	460	14
		1800	445/7T	20018ET3HRB447T-W22	$21,098	N1	1850	1.15	184	96.2	48.701	575	14
		1200	445/7T	20012ET3GRB447T-W22	$25,133	N1	2588	1.15	237	95.8	48.701	460	14
		1200	447/9T	20012ET3GRB449T-W22	$25,255	N1	2940	1.15	237	95.8	56.338	460	14
		1200	504/5Z	20012ET3GKD505Z-W22	$25,133	K1	2841	1.15	244	95.4	55.090	460	14;18;43
		1200	504/5Z	20012ET3HKD505Z-W22	$25,133	K1	2861	1.15	197	95.8	55.090	575	14;18;43
		900	447/9T	20009ET3GKD449T-W22	$49,899	K1	3268	1.15	254	95.0	56.338	460	14
250	185	1800	445/7T	25018ET3GKD447T-W22	$26,716	K1	2993	1.15	281	96.2	48.701	460	14
		1800	445/7T	25018ET3GRB447T-W22	$26,716	N1	2554	1.15	281	96.2	48.701	460	14
		1800	445/7T	25018ET3HRB447T-W22	$26,716	N1	2414	1.15	225	96.2	48.701	575	14
		1800	447/9T	25018ET3GRB449T-W22	$26,803	N1	2815	1.15	281	96.2	56.338	460	14
		1800	504/5Z	25018ET3GKD505Z-W22	$26,716	K1	2818	1.15	277	96.2	55.090	460	14;18;43
		1200	447/9T	25012ET3GKD449T-W22	$35,555	K1	3224	1.15	292	95.8	56.338	460	14
		1200	447/9T	25012ET3GRB449T-W22	$35,555	N1	3224	1.15	292	95.8	56.338	460	14
		1200	586/7Z	25012ET3GKD580Z-W22	$39,631	K1	3817	1.15	299	95.8	61.902	460	14;18;43
		1200	586/7Z	25012ET3HKD580Z-W22	$39,631	K1	4636	1.15	239	95.8	61.902	575	14;18;43
		900	586/7T	25009ET3GKD586/7-W22	$56,168	K1	5128	1.15	299	95.8	61.902	460	14;43

continued on next page

Please refer to back cover for description of "NOTES"

For detailed specifications, data sheets, drawings and performance curves visit http://www.weg.net

CRUSHER DUTY

TEFC - Foot Mount - *continued*

HP	kW	RPM	Frame	Catalog Number	List Price	Mult. Symbol	Approx. Shipping Weight (lbs)	Service Factor	FL Amps @ High	FL. Eff (%)	"C" Dimension (in)	Voltage (V)	Notes
300	220	1800	447/9T	30018ET3GKD449T-W22	$31,384	K1	3030	1.15	330	96.2	56.338	460	14
		1800	447/9T	30018ET3GRB449T-W22	$31,384	N1	2992	1.15	330	96.2	56.338	460	14
		1800	586/7Z	30018ET3GKD580Z-W22	$39,112	K1	3552	1.15	351	95.8	61.902	460	14;18;43
		1800	586/7Z	30018ET3HKD580Z-W22	$39,112	K1	4326	1.15	281	95.8	61.902	575	14;18;43
		1200	447/9T	30012ET3GKD449T-W22	$38,437	K1	3313	1.15	356	95.8	56.338	460	14
		1200	586/7T	30012ET3GKD586/7-W22	$44,301	K1	4081	1.15	356	95.8	61.902	460	14;43
		1200	586/7Z	30012ET3GKD580Z-W22	$44,301	K1	4109	1.15	356	95.8	61.902	460	14;18;43
		1200	586/7Z	30012ET3HKD580Z-W22	$44,301	K1	4936	1.15	307	95.8	61.902	575	14;18;43
		900	586/7T	30009ET3GKD586/7-W22	$58,655	K1	5696	1.15	356	95.8	61.902	460	14;43
350	260	1800	447/9T	35018ET3GKD449T-W22	$36,517	K1	3258	1.15	394	96.2	56.338	460	14
		1800	447/9T	35018ET3GRB449T-W22	$36,517	N1	2941	1.15	394	96.2	56.338	460	14
		1800	586/7Z	35018ET3GKD580Z-W22	$41,230	K1	3577	1.15	415	95.8	61.902	460	14;18;43
		1800	586/7Z	35018ET3HKD580Z-W22	$41,230	K1	4572	1.15	327	96.2	61.902	575	14;18;43
		1200	L447/9T	35012ET3GRB449T-W22	$47,633	N1	3800	1.15	415	95.8	57.181	460	14;19;37;43
		1200	586/7Z	35012ET3GKD580Z-W22	$50,250	K1	4401	1.15	421	95.8	61.902	460	14;18;43
		1200	586/7T	35012ET3GKD586/7-W22	$50,250	K1	4373	1.15	421	95.8	61.902	460	14;43
		900	586/7T	35009ET3GKD586/7-W22	$64,873	K1	4797	1.00	426	95.8	61.902	460	1;14;43
400	300	1800	L447/9T	40018ET3GRB449T-W22	$43,805	N1	3404	1.15	445	96.2	57.181	460	14;43
		1800	586/7Z	40018ET3GKD580Z-W22	$45,805	K1	4052	1.15	466	96.2	61.902	460	14;18;43
		1800	586/7Z	40018ET3HKD580Z-W22	$45,805	K1	3692	1.15	364	96.2	61.902	575	14;18;43
		1200	L447/9T	40012ET3GRB449T-W22	$52,307	N1	3827	1.15	477	95.8	57.181	460	14;19;37;43
		1200	586/7T	40012ET3GKD586/7-W22	$56,201	K1	4699	1.15	483	96.2	61.902	460	14;43
		1200	586/7Z	40012ET3GKD580Z-W22	$58,210	K1	4572	1.15	483	96.2	61.902	460	14;18;43
		1200	586/7Z	40012ET3HKD580Z-W22	$58,210	K1	5513	1.15	386	96.2	61.902	575	14;18;43
450	330	1800	L447/9T	45018ET3GRB449T-W22	$48,010	N1	3657	1.15	501	96.2	57.181	460	14;43
		1800	586/7Z	45018ET3GKD580Z-W22	$48,053	K1	4277	1.15	527	95.8	61.902	460	14;18;43
		1800	586/7T	45018ET3GKD586/7-W22	$48,053	K1	5416	1.15	501	96.2	61.902	460	14;43
		1200	586/7Z	45012ET3GKD580Z-W22	$63,251	K1	5724	1.00	532	96.2	61.902	460	1;14;18;43
		1200	586/7	45012ET3GRB586/7-W22	$62,251	N1	5248	1.00	532	96.2	61.902	460	1;14;43
500	370	1800	L447/9T	50018ET3GRB449T-W22	$50,594	N1	5424	1.00	561	96.2	57.181	460	1;14;19;43
		1800	586/7Z	50018ET3GKD580Z-W22	$51,611	K1	4547	1.00	575	96.2	61.902	460	1;14;18;43
		1200	586/7Z	50012ET3GKD580Z-W22	$65,962	K1	5024	1.00	603	96.2	61.902	460	1;14;18;43

Please refer to back cover for description of "NOTES"

For detailed specifications, data sheets, drawings and performance curves visit http:// www.weg.net

Data subject to change without notice.

Severe Duty – Three-Phase Motors

VECTOR DUTY

TENV - Foot Mount - Double C-Face

Designed specifically for inverter operation for applications requiring 1000:1 constant torque turndown ratio.

Standard Features:

- Class F insulation (Impregnation Resin and Magnet wire are class H)
- NEMA design B.
- F1 Mounted (F2 convertible).
- Stainless Steel Nameplate - Laser etched with High contrast background
- Gasketed conduit box

ADDITIONAL TECHNICAL DATA

CONTACT WEG OR VISIT WWW.WEG.NET

Features that make a difference:

- Constant torque operation from 0 to base speed (1000:1) on PWM Vector Drive
- Constant Horsepower operation up to 150% base speed
- Ready for encoder mount
- With thermostats (1 per phase)
- Special nameplate data for easy drive set-up
- Ready for C-face brake, limited to 10 lb-ft braking torque

Inverter Rated:
1000 : 1 for constant torque

TENV - Foot Mount - Double C-Face

HP	kW	RPM	Frame	Catalog Number	List Price	Mult. Symbol	Approx. Shipping Weight (lbs)	Ser-vice Factor	FL Amps @ High	FL. Eff (%)	"C" Dimension (in)	Voltage (V)	Notes
1	0.75	1800	143/5TC	00118NT3FVD143TC-W22	$697	D1	51	1.00	1.41	85.5	14.678	230/460	17;19
1.5	1.1	1800	143/5TC	00158NT3FVD145TC-W22	$705	D1	60	1.00	2.00	86.5	14.678	230/460	17;19
2	1.5	1800	143/5TC	00218NT3FVD145TC-W22	$928	D1	62	1.00	2.65	86.5	14.678	230/460	17;19
3	2.2	1800	182/4TC	00318NT3FVD182TC-W22	$1,150	D1	107	1.00	3.91	89.5	16.569	230/460	17;19
5	3.7	1800	182/4TC	00518NT3FVD184TC-W22	$1,373	D1	116	1.00	7.11	89.5	16.569	230/460	17;19;37
7.5	5.5	1800	213/5TC	00718NT3FVD213TC-W22	$1,803	D1	173	1.00	9.07	91.7	20.041	230/460	17;19
10	7.5	1800	213/5TC	01018NT3FVD215TC-W22	$2,157	D1	207	1.00	13.3	91.7	20.041	230/460	17;19;37
15	11	1800	254/6TC	01518NT3FVD254TC-W22	$2,567	D1	365	1.00	19.4	92.4	25.569	230/460	17;19
20	15	1800	254/6TC	02018NT3FVD256TC-W22	$3,747	D1	398	1.00	26.6	93.0	25.569	230/460	17;19;37

Note: Flanged motors on Cast Iron frame sizes 143/5 to 254/6 have non-NEMA BA dimension. Refer to mechanical section of this catalog for details.

Severe Duty – Three-Phase Motors

IEC TRU-METRIC™ - Three Phase

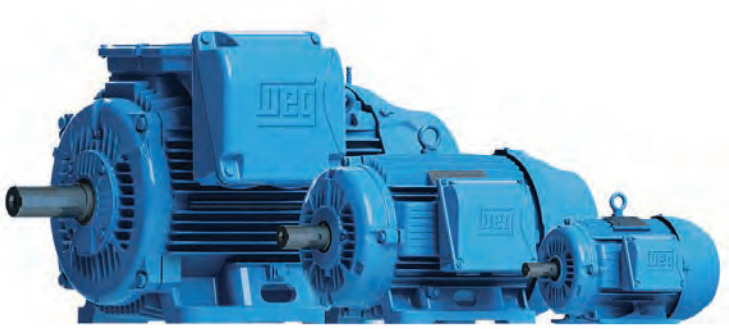

TEFC

This line is designed and built according to IEC Standards 60034 and 60072.

Standard Features:

- 60 Hz (1.25 Service Factor) and 50 Hz (1.0 Service Factor)
- Class F insulation (Impregnation Resin and Magnet wire are class H)
- F2 mounted as standard (F1 convertible)
- Stainless Steel Nameplate - Laser etched with high contrast background
- Regreasable ball bearings (Frames 160 and up)
- Gasketed conduit box
- Class I, Div. 2, Groups A, B, C & D – T3, Class II, Div 2, Groups F & G – T3C (Cast Iron Frames only)
- Suitable for WYE/Delta Start

Features that make a difference:

- 1.25 Service Factor for 60 Hz operation (IE3)
- Optimized ventilation system for cooler operation and low noise levels
- Solid base for lower vibration levels (Cast Iron Frames)
- Frames 225 and up can easily be F1 (B3L) converted by simply rotating the terminal box adapter or F3 by removing it
- Terminal blocks

***Inverter Rated (IE3):**
1000:1 for variable torque
12:1 for constant torque

** Insulated NDE housing standard on 315L and above.*

ADDITIONAL TECHNICAL DATA

ELECTRICAL DATA: B-44
MECHANICAL DATA: B-106

TEFC - Foot Mount - IE3

HP	kW	RPM	Frame	Catalog Number	List Price	Mult. Symbol	Approx. Shipping Weight (lbs)	Service Factor	FL Amps @ High	FL. Eff (%)	"C" Dimension (in)	Voltage (V)	Notes
5.5	4	900//750	160M	00409ET3Y160M-W22	$1,947	T1	299	1.25	8.17	86.5	23.543	460//380-415/660-690	7
7.5	5.5	1200//1000	160M	00512ET3Y160M-W22	$1,760	T1	291	1.25	9.48	91.0	23.543	460//380-415/660-690	7
		900//750	160M	00509ET3Y160M-W22	$2,244	T1	306	1.25	11.1	87.5	23.543	460//380-415/660-690	7
10	7.5	1200//1000	160M	00712ET3Y160M-W22	$2,306	T1	306	1.25	13.1	91.0	23.543	460//380-415/660-690	7
		900//750	160L	00709ET3Y160L-W22	$2,774	T1	352	1.25	15.2	88.5	25.276	460//380-415/660-690	7
15	11	3600//3000	160M	01136ET3Y160M-W22	$2,102	T1	304	1.25	17.9	91.7	23.543	460//380-415/660-690	7
		1800//1500	160M	01118ET3Y160M-W22	$1,726	T1	321	1.25	18.2	92.4	23.543	460//380-415/660-690	7
		1200//1000	160L	01112ET3Y160L-W22	$3,160	T1	354	1.25	18.8	91.7	25.276	460//380-415/660-690	7
		900//750	180L	01109ET3Y180L-W22	$4,031	T1	419	1.25	19.5	89.5	27.638	460//380-415/660-690	7
20	15	3600//3000	160M	01536ET3Y160M-W22	$2,413	T1	320	1.25	24.4	91.7	23.543	460//380-415/660-690	7
		1800//1500	160L	01518ET3Y160L-W22	$2,118	T1	375	1.25	250	93.0	25.276	460//380-415/660-690	7
		1200//1000	180L	01512ET3Y180L-W22	$3,884	T1	447	1.25	24.7	91.7	27.638	460//380-415/660-690	7
		900//750	200L	01509ET3Y200L-W22	$5,158	T1	517	1.25	28.0	91.0	30.197	460//380-415/660-690	7
25	18.5	3600//3000	160L	01836ET3Y160L-W22	$2,925	T1	353	1.25	29.9	92.4	25.276	460//380-415/660-690	7
		1800//1500	180M	01818ET3Y180M-W22	$2,689	T1	436	1.25	30.6	93.6	26.142	460//380-415/660-690	7
		1200//1000	200L	01812ET3Y200L-W22	$4,886	T1	552	1.25	30.8	93.0	30.197	460//380-415/660-690	7
		900//750	225S/M	01809ET3Y225S/M-W22	$5,902	T1	830	1.25	31.6	93.0	34.882	460//380-415/660-690	7
30	22	3600//3000	180M	02236ET3Y180M-W22	$3,492	T1	424	1.25	34.7	92.4	26.142	460//380-415/660-690	7
		1800//1500	180L	02218ET3Y180L-W22	$3,225	T1	457	1.25	36.0	93.6	27.638	460//380-415/660-690	7
		1200//1000	200L	02212ET3Y200L-W22	$4,924	T1	601	1.25	37.1	93.0	30.197	460//380-415/660-690	7
		900//750	225S/M	02209ET3Y225S/M-W22	$7,506	T1	885	1.25	37.6	93.0	34.882	460//380-415/660-690	7
40	30	3600//3000	200L	03036ET3Y200L-W22	$4,877	T1	575	1.25	47.1	93.0	30.197	460//380-415/660-690	7
		1800//1500	200L	03018ET3Y200L-W22	$4,312	T1	580	1.25	49.4	94.1	30.197	460//380-415/660-690	7
		1200//1000	225S/M	03012ET3Y225S/M-W22	$7,689	T1	1055	1.25	47.6	94.1	34.882	460//380-415/660-690	7
		900//750	250S/M	03009ET3Y250S/M-W22	$8,858	T1	1078	1.25	50.9	93.6	37.992	460//380-415/660-690	7
50	37	3600//3000	200L	03736ET3Y200L-W22	$5,487	T1	587	1.25	61.3	93.6	30.197	460//380-415/660-690	7
		1800//1500	225S/M	03718ET3Y225S/M-W22	$6,984	T1	1041	1.25	58.5	94.5	34.882	460//380-415/660-690	7
		1200//1000	250S/M	03712ET3Y250S/M-W22	$9,947	T1	1266	1.25	58.8	94.1	37.992	460//380-415/660-690	7
		900//750	280S/M	03709ET3Y280S/M-W22	$11,751	T1	1481	1.25	64.1	94.1	42.165	460//380-415/660-690	7
60	45	3600//3000	225S/M	04536ET3Y225S/M-W22	$7,961	T1	1053	1.25	66.7	94.1	33.701	460//380-415/660-690	7
		1800//1500	225S/M	04518ET3Y225S/M-W22	$7,391	T1	1022	1.25	69.9	950	34.882	460//380-415/660-690	7
		1200//1000	280S/M	04512ET3Y280S/M-W22	$11,023	T1	1681	1.25	74.7	94.5	42.165	460//380-415/660-690	7
		900//750	280S/M	04509ET3Y280S/M-W22	$12,815	T1	1631	1.25	77.0	94.1	42.165	460//380-415/660-690	7
75	55	3600//3000	250S/M	05536ET3Y250S/M-W22	$9,847	T1	1259	1.25	80.3	94.5	37.992	460//380-415/660-690	7
		1800//1500	250S/M	05518ET3Y250S/M-W22	$8,961	T1	1206	1.25	85.1	95.4	37.992	460//380-415/660-690	7
		1200//1000	280S/M	05512ET3Y280S/M-W22	$13,622	T1	1794	1.25	90.2	94.5	42.165	460//380-415/660-690	7
		900//750	315S/M	05509ET3Y315S/M-W22	$15,379	T1	2436	1.25	93.7	94.5	50.157	460//380-415/660-690	7
100	75	3600//3000	280S/M	07536ET3Y280S/M-W22	$12,472	T1	1776	1.25	111	94.5	42.165	460//380-415/660-690	7
		1800//1500	280S/M	07518ET3Y280S/M-W22	$12,353	T1	1738	1.25	116	95.4	42.165	460//380-415/660-690	7
		1200//1000	315S/M	07512ET3Y315S/M-W22	$16,479	T1	2399	1.25	122	95.0	50.157	460//380-415/660-690	7
		900//750	315S/M	07509ET3Y315S/M-W22	$18,647	T1	2701	1.25	127	95.0	50.157	460//380-415/660-690	7

continued on next page

Please refer to back cover for description of "NOTES"

For detailed specifications, data sheets, drawings and performance curves visit http:// www.weg.net

Severe Duty - Three-Phase Motors

IEC TRU-METRIC™

TEFC - Foot Mount - IE3 - *continued*

HP	kW	RPM	Frame	Catalog Number	List Price	Mult. Symbol	Approx. Shipping Weight (lbs)	Service Factor	FL Amps @ High	FL. Eff (%)	"C" Dimension (in)	Voltage (V)	Notes
125	90	3600//3000	280S/M	09036ET3Y280S/M-W22	$16,720	T1	1862	1.25	132	95.0	42.165	460//380-415/660-690	7
		1800//1500	280S/M	09018ET3Y280S/M-W22	$15,220	T1	1835	1.25	139	95.4	42.165	460//380-415/660-690	7
		1200//1000	315S/M	09012ET3Y315S/M-W22	$19,448	T1	2601	1.25	146	95.4	50.157	460//380-415/660-690	7
		900//750	315S/M	09009ET3Y315S/M-W22	$21,288	T1	2884	1.25	152	95.0	50.157	460//380-415/660-690	7
150	110	3600//3000	315S/M	11036ET3Y315S/M-W22	$21,018	T1	2382	1.25	163	95.0	48.976	460//380-415/660-690	7
		1800//1500	280S/M	11018ET3Y280S/M-W22	$17,078	T1	2210	1.25	170	95.8	42.165	460//380-415/660-690	7
		1200//1000	315S/M	11012ET3Y315S/M-W22	$22,507	T1	2730	1.25	178	95.8	50.157	460//380-415/660-690	7
		900//750	315L	11009ET3Y315L-W22	$27,910	T1	3008	1.25	186	95.4	54.685	460//380-415/660-690	7;43
175	132	3600//3000	315S/M	13236ET3Y315S/M-W22	$23,180	T1	2662	1.25	193	95.4	48.976	460//380-415/660-690	7
		1800//1500	315S/M	13218ET3Y315S/M-W22	$19,732	T1	2540	1.25	203	96.2	50.157	460//380-415/660-690	7
		1200//1000	315S/M	13212ET3Y315S/M-W22	$25,642	T1	3031	1.25	214	95.8	50.157	460//380-415/660-690	7
		900//750	315L	13209ET3Y315L-W22	$33,687	T1	3796	1.25	223	95.4	54.685	460//380-415/660-690	7;43
200	150	3600//3000	315S/M	15036ET3Y315S/M-W22	$26,249	T1	2682	1.25	219	95.4	48.976	460//380-415/660-690	7
		1800//1500	315S/M	15018ET3Y315S/M-W22	$21,772	T1	2784	1.25	228	96.2	50.157	460//380-415/660-690	7
		1200//1000	315L	15012ET3Y315L-W22	$28,298	T1	3557	1.15	240	95.8	54.685	460//380-415/660-690	7;43
250	185	3600//3000	315S/M	18536ET3Y315S/M-W22	$26,529	T1	2900	1.25	269	95.8	48.976	460//380-415/660-690	7
		1800//1500	315S/M	18518ET3Y315S/M-W22	$26,247	T1	2948	1.25	284	96.2	50.157	460//380-415/660-690	7
		1200//1000	355M/L	18512ET3Y355M/L-W22	$43,876	T1	3666	1.15	311	95.8	58.346	460//380-415/660-690	7
300	220	3600//3000	315L	22036ET3Y315L-W22	$44,212	T1	3468	1.25	315	96.2	53.268	460//380-415/660-690	7;43
		1800//1500	315L	22018ET3Y315L-W22	$36,234	T1	3113	1.25	338	96.2	54.685	460//380-415/660-690	7;43
		1200//1000	355M/L	22012ET3Y355M/L-W22	$46,322	T1	4507	1.15	370	95.8	58.346	460//380-415/660-690	7;43
350	260	3600//3000	355M/L	26036ET3Y355M/L-W22	$50,637	T1	4975	1.15	373	96.2	55.591	460//380-415/660-690	7;43
		1800//1500	355M/L	26018ET3Y355M/L-W22	$43,761	T1	4218	1.15	399	96.2	58.346	460//380-415/660-690	7;43
		1200//1000	355M/L	26012ET3Y355M/L-W22	$53,001	T1	5075	1.15	436	95.9	58.346	460//380-415/660-690	7;43
400	300	3600//3000	355M/L	30036ET3Y355M/L-W22	$66,321	T1	4034	1.15	315	96.2	55.591	460//380-415/660-690	7;43
		1800//1500	355M/L	30018ET3Y355M/L-W22	$60,292	T1	4337	1.00	466	96.2	58.346	460//380-415/660-690	7;43
450	330	1800//1500	355M/L	33018ET3Y355M/L-W22	$64,557	T1	4906	1.15	505	96.5	58.346	460//380-415/660-690	7;43

Please refer to back cover for description of "NOTES"

For detailed specifications, data sheets, drawings and performance curves visit http:// www.weg.net

Data subject to change without notice.

SINGLE-PHASE

Foot Mount A-110
C-Face – Foot Mount A-110

THREE-PHASE

Foot Mount A-112
C-Face – Foot Mount A-116
C-Face – Footless A-117
JP – Foot Mount A-117
ATEX Foot Mount A-120

Fractional Explosion Proof Motors

Features:

- Class F insulation
- 1.0 service factor
- Foot mount motors with and without C-flange
- Class I - Group C & D and Class II - Groups E, F & G – T3B
- Thermally Protected
- Long leads for remote wiring
- Aluminum endshields

Features that make a difference:

- 50°C ambient temperature rating
- Three-Phase motors also rated for 50Hz
- Unassembled aluminum conduit box included

Please contact your authorized WEG distributor or go to **weg.net/us** for further information or additional specifications. **1-800-ASK-4WEG**

www.weg.net/us

Please refer to back cover for description of "NOTES"

For detailed specifications, data sheets, drawings and performance curves visit http:// www.weg.net

Data subject to change without notice.

Foot Mount

HP	kW	RPM	Frame	Catalog Number	List Price	Mult. Symbol	Approx. Shipping Weight (lbs)	Service Factor	FL Amps @ High	FL. Eff (%)	"C" Dimension (in)	Voltage (V)	Notes
0.33	0.25	3600	56	**.3336XS1B56**	**$612**	XF	23	1.00	2.60	59.7	11.790	115/208-230	1;3;9;42
		1800	56	**.3318XS1B56**	**$670**	XF	25	1.00	3.00	60.4	11.790	115/208-230	1;3;9;42
0.5	0.37	3600	56	**.5036XS1B56**	**$636**	XF	26	1.00	3.40	66.7	12.040	115/208-230	1;3;9;42
		1800	56	**.5018XS1B56**	**$739**	XF	27	1.00	4.20	62.4	12.290	115/208-230	1;3;9;42
0.75	0.55	3600	56	**.7536XS1B56**	**$717**	XF	30	1.00	4.30	74.5	12.540	115/208-230	1;3;9;42
		1800	56	**.7518XS1B56**	**$868**	XF	34	1.00	4.52	70.8	13.040	115/208-230	1;3;9;42
1	0.75	3600	56	**00136XS1B56**	**$774**	XF	32	1.00	5.30	76.5	13.040	115/208-230	1;3;9;42
		1800	56	**00118XS1B56**	**$988**	XF	37	1.00	6.30	74.8	13.790	115/208-230	1;3;9;42
1.5	1.1	3600	56	**00156XS1C56**	**$1,121**	XF	38	1.00	7.80	80.0	14.040	208-230	1;3;9;42
		1800	56H	**00158XS1C56H**	**$1,324**	XF	48	1.00	7.80	80.0	15.420	208-230	1;3;9;42
2	1.5	3600	56H	**00236XS1C56H**	**$1,408**	XF	43	1.00	9.80	81.1	14.540	208-230	1;3;9;42

C-Face - Foot Mount

HP	kW	RPM	Frame	Catalog Number	List Price	Mult. Symbol	Approx. Shipping Weight (lbs)	Service Factor	FL Amps @ High	FL. Eff (%)	"C" Dimension (in)	Voltage (V)	Notes
0.33	0.25	3600	56C	**.3336XS1B56C**	**$737**	XF	23	1.00	2.60	59.7	11.790	115/208-230	1;3;9;42
		1800	56C	**.3318XS1B56C**	**$816**	XF	25	1.00	3.00	60.4	11.790	115/208-230	1;3;9;42
0.5	0.37	3600	56C	**.5036XS1B56C**	**$717**	XF	26	1.00	3.40	66.7	12.040	115/208-230	1;3;9;42
		1800	56C	**.5018XS1B56C**	**$817**	XF	27	1.00	4.20	62.4	12.290	115/208-230	1;3;9;42
0.75	0.55	3600	56C	**.7536XS1B56C**	**$773**	XF	30	1.00	4.30	74.5	12.540	115/208-230	1;3;9;42
		1800	56C	**.7518XS1B56C**	**$912**	XF	34	1.00	4.52	70.8	13.040	115/208-230	1;3;9;42
1	0.75	3600	56C	**00136XS1B56C**	**$814**	XF	32	1.00	5.30	76.5	13.040	115/208-230	1;3;9;42
		1800	56C	**00118XS1B56C**	**$1,036**	XF	37	1.00	6.30	74.8	13.790	115/208-230	1;3;9;42
1.5	1.1	3600	56C	**00156XS1C56C**	**$1,274**	XF	38	1.00	7.80	80.0	14.040	208-230	1;3;9;42
		1800	56HC	**00158XS1C56HC**	**$1,420**	XF	48	1.00	7.80	80.0	15.420	208-230	1;3;9;42
2	1.5	3600	56HC	**00236XS1C56HC**	**$1,457**	XF	43	1.00	9.80	81.1	14.540	208-230	1;3;9;42

Please refer to back cover for description of "NOTES"

For detailed specifications, data sheets, drawings and performance curves visit http:// www.weg.net

Explosion Proof Motors

NEMA Premium® EFFICIENCY MOTORS

WEG Explosion Proof motors are suitable for applications requiring UL or CSA certification for hazardous locations.

Standard Features:

- Class F insulation (Impregnation Resin and Magnet wire are class H)
- F1 Mounted
- Stainless Steel Nameplate - Laser etched with high contrast background
- Regreasable ball bearings (Frames 254T and up)
- CSA Approved - File LR50962
  - Class I, Division 1, Groups C & D Temperature Code T3C
  - Class II, Division 1, Groups F & G Temperature Code T3C
- UL Listed - File E87848
  - Class I, Division 1, Groups C & D
  - Class II, Division 1, Groups F & G[1]
  - Frame (143T-326T) Temperature Code T3C
  - Frame (364T and up) Temperature Code T3C

[1] Class II UL only available as IP54 Modification.

Stock units are Class II only for $cCSA_{US}$

Available with AEGIS® SGR Inside

Features that make a difference:

- NPT threaded terminal box
- Non-sparking fan
- Thermostats
- IP55 rated enclosure
- VFD Service 20:1 CT; 1000:1 VT (cCSAus and excludes frames 449T & 586/7)

CSA files are NRTL cCSAus listings

Inverter Rated:

UL Listed - 143T - 215T only (File E87848)

CSA US - all frames (Certificate 1629892)

Constant Torque

20:1 for frames 143T to 447T - Class I & II
4:1 for frame 449T - Class I only
20:1 for frame 504/5 - Class I & II
2:1 for frame 586/7 - Class I & II

Variable Torque

1000:1 for all frames excluding 449T - Class I & II
1000:1 for 449T - Class I only

ADDITIONAL TECHNICAL DATA

ELECTRICAL DATA: B-19
MECHANICAL DATA: B-76

For detailed specifications, data sheets, drawings and performance curves visit http:// www.weg.net

Data subject to change without notice.

Foot Mount

HP	kW	RPM	Frame	Catalog Number	List Price	Mult. Symbol	Approx. Shipping Weight (lbs)	Service Factor	FL Amps @ High	FL. Eff (%)	"C" Dimension (in)	Voltage (V)	Notes
0.33	0.25	3600	56	.3336XS3E56	$650	XF	21	1.00	0.60	69.8	10.520	208-230/460	1;3;9;42
		1800	56	.3318XS3E56	$713	XF	23	1.00	0.60	76.7	10.520	208-230/460	1;3;9;17;42
0.5	0.37	3600	56	.5036XS3E56	$782	XF	24	1.00	0.90	73.1	11.790	208-230/460	1;3;9;42
		1800	56	.5018XS3E56	$741	XF	27	1.00	0.85	79.1	11.920	208-230/460	1;3;9;42
0.75	0.55	3600	56	.7536XS3E56	$815	XF	25	1.00	1.20	77.1	11.790	208-230/460	1;3;9;42
		1800	56	.7518XS3E56	$817	XF	28	1.00	1.40	78.6	12.290	208-230/460	1;3;9;42
1	0.75	3600	56	00136XT3E56	$858	XF	27	1.00	1.60	77.0	11.920	230/460	1;3;9;42
		3600	143/5T	00136XT3E143/5T	$886	XT	64	1.15	1.41	81.5	13.752	230/460	
		1800	56	00118XT3E56	$922	XF	31	1.00	1.60	85.5	13.660	230/460	1;3;9;42
		1800	143/5T	00118XT3E143/5T	$901	XT	62	1.15	1.43	85.5	13.752	230/460	
		1800	143/5T	00118XT3H143/5T	$901	XT	62	1.15	1.14	85.5	13.752	575	
		1200	145T	00112XT3E145T	$988	XT	71	1.15	1.54	82.5	13.752	230/460	
		1200	145T	00112XT3H145T	$988	XT	71	1.15	1.23	82.5	13.752	575	
		900	182/4T	00109XT3E182T	$1,974	XT	120	1.15	2.30	78.5	15.862	230/460	
1.5	1.1	3600	56	00156XT3E56	$1,050	XF	30	1.00	2.10	84.0	12.780	230/460	1;3;9;42
		3600	143/5T	00156XT3E143/5T	$916	XT	65	1.15	2.05	84.0	13.752	230/460	
		3600	143/5T	00156XT3H143/5T	$916	XT	64	1.15	1.64	84.0	13.752	575	
		1800	56H	00158XT3E56H	$1,003	XF	41	1.00	2.10	86.5	14.540	230/460	1;3;9;42
		1800	145T	00158XT3E145T	$963	XT	70	1.15	2.05	86.5	13.752	230/460	
		1800	145T	00158XT3H145T	$963	XT	69	1.15	1.64	86.5	13.752	575	
		1200	182/4T	00152XT3E182T	$1,105	XT	121	1.15	2.32	87.5	15.862	230/460	
		1200	182/4T	00152XT3H182T	$1,105	XT	119	1.15	1.86	87.5	15.862	575	
		900	184T	00159XT3E184T	$1,901	XT	136	1.15	2.70	82.5	15.862	230/460	
2	1.5	3600	56H	00236XT3E56H	$1,171	XF	35	1.00	2.70	85.5	14.040	230/460	1;3;9;42
		3600	145T	00236XT3E145T	$935	XT	72	1.15	2.69	85.5	13.752	230/460	
		3600	145T	00236XT3H145T	$935	XT	72	1.15	2.15	85.5	13.752	575	
		1800	56H	00218XT3E56H	$1,090	XF	48	1.00	2.70	86.5	15.040	230/460	1;3;9;42
		1800	145T	00218XT3E145T	$995	XT	70	1.15	2.72	86.5	13.752	230/460	
		1800	145T	00218XT3H145T	$995	XT	70	1.15	2.18	86.5	13.752	575	
		1200	184T	00212XT3E184T	$1,158	XT	137	1.15	3.13	88.5	15.862	230/460	
		1200	184T	00212XT3H184T	$1,158	XT	137	1.15	2.50	88.5	15.862	575	
		900	213/5T	00209XT3E213/5T	$2,439	XT	174	1.15	3.45	84.0	19.450	230/460	39
3	2.2	3600	182/4T	00336XT3E182T	$1,192	XT	120	1.15	3.76	86.5	15.862	230/460	
		3600	182/4T	00336XT3H182T	$1,192	XT	120	1.15	3.01	86.5	15.862	575	
		1800	182/4T	00318XT3E182T	$1,208	XT	120	1.15	3.91	89.5	15.862	230/460	
		1800	182/4T	00318XT3H182T	$1,208	XT	120	1.15	3.13	89.5	15.862	575	
		1200	213/5T	00312XT3E213/5T	$1,792	XT	187	1.15	4.41	89.5	19.450	230/460	
		1200	213/5T	00312XT3H213/5T	$1,792	XT	187	1.15	3.53	89.5	19.450	575	
		900	215T	00309XT3E215T	$2,805	XT	205	1.15	4.36	85.5	19.450	230/460	39
5	3.7	3600	184T	00536XT3E184T	$1,255	XT	135	1.15	6.10	88.5	15.862	230/460	39
		3600	184T	00536XT3H184T	$1,255	XT	135	1.15	4.88	88.5	15.862	575	39
		1800	184T	00518XT3E184T	$1,220	XT	127	1.15	6.57	89.5	15.862	230/460	39
		1800	184T	00518XT3H184T	$1,220	XT	137	1.15	5.26	89.5	15.862	575	39
		1200	215T	00512XT3E215T	$1,899	XT	213	1.15	6.83	89.5	19.450	230/460	
		1200	215T	00512XT3H215T	$1,899	XT	213	1.15	5.46	89.5	19.450	575	
		900	254T	00509XT3E254T	$3,953	XT	344	1.15	7.93	87.5	23.175	230/460	

continued on next page

Please refer to back cover for description of "NOTES"

For detailed specifications, data sheets, drawings and performance curves visit http://www.weg.net

Data subject to change without notice.

Foot Mount - *continued*

HP	kW	RPM	Frame	Catalog Number	List Price	Mult. Symbol	Approx. Shipping Weight (lbs)	Service Factor	FL Amps @ High	FL. Eff (%)	"C" Dimension (in)	Voltage (V)	Notes
7.5	5.5	3600	213/5T	00736XT3E213/5T	$1,646	XT	182	1.15	8.57	89.5	19.450	230/460	
		3600	213/5T	00736XT3H213/5T	$1,646	XT	182	1.15	6.86	89.5	19.450	575	
		1800	213/5T	00718XT3E213/5T	$1,897	XT	178	1.15	9.41	91.7	19.450	230/460	
		1800	213/5T	00718XT3H213/5T	$1,897	XT	177	1.15	7.53	91.7	19.450	575	
		1200	254T	00712XT3E254T	$2,483	XT	344	1.15	9.73	91.0	23.175	230/460	
		1200	254T	00712XT3H254T	$2,483	XT	344	1.15	7.78	91.0	23.175	575	
		900	256T	00709XT3E256T	$4,707	XT	388	1.15	11.6	87.5	24.923	230/460	39
10	7.5	3600	215T	01036XT3E215T	$1,727	XT	207	1.15	11.6	90.2	19.450	230/460	
		3600	215T	01036XT3H215T	$1,727	XT	206	1.15	9.28	90.2	19.450	575	
		1800	L215T	01018XT3E215T	$1,997	XT	149	1.15	12.7	91.7	20.631	230/460	
		1800	L215T	01018XT3H215T	$1,997	XT	213	1.15	10.2	91.7	20.631	575	
		1200	256T	01012XT3E256T	$2,900	XT	387	1.15	13.3	91.0	24.923	230/460	
		1200	256T	01012XT3H256T	$2,900	XT	387	1.15	10.6	91.0	24.923	575	39
		900	284T	01009XT3E284T	$5,668	XT	496	1.15	13.3	91.0	26.407	230/460	
15	11	3600	254T	01536XT3E254T	$2,387	XT	343	1.15	17.4	91.0	23.175	230/460	
		3600	254T	01536XT3H254T	$2,387	XT	342	1.15	13.9	91.0	23.175	575	
		1800	254T	01518XT3E254T	$2,653	XT	348	1.15	18.4	92.4	23.175	230/460	
		1800	254T	01518XT3H254T	$2,653	XT	302	1.15	14.7	92.4	23.175	575	
		1200	284T	01512XT3E284T	$4,048	XT	498	1.15	17.5	91.7	26.407	230/460	
		1200	284T	01512XT3H284T	$4,048	XT	497	1.15	14.0	91.7	26.407	575	
		900	286T	01509XT3E286T	$7,102	XT	536	1.15	19.0	91.0	27.905	230/460	
20	15	3600	256T	02036XT3E256T	$3,083	XT	380	1.15	23.2	91.0	24.923	230/460	
		3600	256T	02036XT3H256T	$3,083	XT	379	1.15	18.6	91.0	24.923	575	
		1800	256T	02018XT3E256T	$3,008	XT	391	1.15	25.0	93.0	24.923	230/460	
		1800	256T	02018XT3H256T	$3,008	XT	392	1.15	20.0	93.0	24.923	575	
		1200	286T	02012XT3E286T	$4,444	XT	537	1.15	24.2	91.7	27.905	230/460	
		1200	286T	02012XT3H286T	$4,444	XT	536	1.15	19.4	91.7	27.905	575	
		900	324T	02009XT3E324T	$8,390	XT	654	1.15	27.5	92.4	29.602	230/460	
25	18.5	3600	284TS	02536XT3E284TS	$4,188	XT	493	1.15	28.6	92.4	25.033	230/460	
		3600	284TS	02536XT3H284TS	$4,188	XT	493	1.15	22.9	92.4	25.033	575	
		1800	284T	02518XT3E284T	$3,886	XT	486	1.15	29.9	93.6	26.407	230/460	
		1800	284T	02518XT3H284T	$3,886	XT	506	1.15	23.9	93.6	26.407	575	
		1200	324T	02512XT3E324T	$5,375	XT	686	1.15	30.4	93.0	29.602	230/460	
		1200	324T	02512XT3H324T	$5,375	XT	665	1.15	24.3	93.0	29.602	575	
		900	326T	02509XT3E326T	$10,512	XT	713	1.15	35.4	92.4	31.106	230/460	
30	22	3600	286TS	03036XT3E286TS	$4,262	XT	544	1.15	33.7	93.0	26.531	230/460	
		3600	286TS	03036XT3H286TS	$4,262	XT	543	1.15	27.0	93.0	26.531	575	
		1800	286T	03018XT3E286T	$4,296	XT	650	1.15	36.0	93.6	27.905	230/460	
		1800	286T	03018XT3H286T	$4,296	XT	546	1.15	28.8	93.6	27.905	575	
		1200	326T	03012XT3E326T	$6,196	XT	747	1.15	36.7	93.0	31.106	230/460	39
		1200	326T	03012XT3H326T	$6,196	XT	734	1.15	29.4	93.0	31.106	575	
		900	364/5T	03009XT3E364T	$15,071	XT	1010	1.15	38.5	93.0	33.701	230/460	

continued on next page

Please refer to back cover for description of "NOTES"

For detailed specifications, data sheets, drawings and performance curves visit http:// www.weg.net

Data subject to change without notice.

Foot Mount - *continued*

HP	kW	RPM	Frame	Catalog Number	List Price	Mult. Symbol	Approx. Shipping Weight (lbs)	Service Factor	FL Amps @ High	FL. Eff (%)	"C" Dimension (in)	Voltage (V)	Notes
40	30	3600	324TS	04036XT3E324TS	$5,583	XT	669	1.15	45.8	93.6	28.102	230/460	
		3600	324TS	04036XT3H324TS	$5,583	XT	669	1.15	36.6	93.6	28.102	575	
		1800	324T	04018XT3E324T	$5,380	XT	690	1.15	48.2	94.1	29.602	230/460	
		1800	324T	04018XT3H324T	$5,380	XT	693	1.15	38.6	94.1	29.602	575	
		1200	364/5T	04012XT3E364T	$10,576	XT	1091	1.15	47.1	94.1	33.701	230/460	
		1200	364/5T	04012XT3H364T	$10,576	XT	1084	1.15	37.7	94.1	33.701	575	
		900	364/5T	04009XT3E365T	$15,505	XT	1110	1.15	52.2	93.6	33.701	230/460	
50	37	3600	326TS	05036XT3E326TS	$6,582	XT	731	1.15	55.5	94.1	29.606	230/460	
		3600	326TS	05036XT3H326TS	$6,582	XT	723	1.15	44.4	94.1	29.606	575	
		1800	326T	05018XT3E326T	$6,545	XT	702	1.15	60.6	94.5	31.106	230/460	
		1800	326T	05018XT3H326T	$6,545	XT	732	1.15	48.5	94.5	31.106	575	
		1200	364/5T	05012XT3E365T	$10,597	XT	1124	1.15	58.1	94.1	33.701	230/460	39
		1200	364/5T	05012XT3H365T	$10,597	XT	1113	1.15	46.5	94.1	33.701	575	
		900	404/5T	05009XT3E404T	$22,443	XT	1338	1.15	68.0	93.6	38.074	230/460	
60	45	3600	364/5TS	06036XT3E364TS	$9,988	XT	1109	1.15	68.2	94.1	31.575	230/460	
		3600	364/5TS	06036XT3H364TS	$9,988	XT	1114	1.15	54.6	94.1	31.575	575	
		1800	364/5T	06018XT3E364T	$10,460	XT	1146	1.15	68.3	95.0	33.701	230/460	
		1800	364/5T	06018XT3H364T	$10,460	XT	1112	1.15	54.6	95.0	33.701	575	
		1200	404/5T	06012XT3E404T	$13,196	XT	1279	1.15	70.3	94.5	38.074	230/460	39
		1200	404/5T	06012XT3H404T	$13,196	XT	1222	1.15	56.2	94.5	38.074	575	
		900	404/5T	06009XT3E405T	$26,900	XT	1336	1.15	75.9	93.0	38.074	230/460	
75	55	3600	364/5TS	07536XT3E365TS	$11,285	XT	1110	1.15	82.4	94.1	31.575	230/460	
		3600	364/5TS	07536XT3H365TS	$11,285	XT	1033	1.15	65.9	94.1	31.575	575	
		1800	364/5T	07518XT3E365T	$11,125	XT	1146	1.15	83.2	95.4	33.701	230/460	
		1800	364/5T	07518XT3H365T	$11,125	XT	1133	1.15	66.6	95.4	33.701	575	
		1200	404/5T	07512XT3E405T	$13,836	XT	1330	1.15	87.0	94.5	38.074	230/460	
		900	444/5T	07509XT3E444T	$29,094	XT	2077	1.15	92.2	93.6	43.797	230/460	
100	75	3600	404/5TS	10036XT3E405TS	$12,999	XT	1290	1.15	110	95.0	35.074	230/460	
		3600	404/5TS	10036XT3G405TS	$12,999	XT	1214	1.15	110	95.0	35.074	460	
		3600	404/5TS	10036XT3H405TS	$12,999	XT	1296	1.15	88.1	95.0	35.074	575	39
		1800	404/5T	10018XT3E405T	$14,206	XT	1317	1.15	113	95.4	38.074	230/460	
		1800	404/5T	10018XT3G405T	$14,206	XT	1313	1.15	113	95.4	38.074	460	
		1800	404/5T	10018XT3H405T	$14,206	XT	1322	1.15	90.4	95.4	38.074	575	
		1200	444/5T	10012XT3E444T	$21,032	XT	2268	1.15	121	95.0	43.797	230/460	
		1200	444/5T	10012XT3G444T	$21,032	XT	2233	1.15	121	95.0	43.797	460	
		900	444/5T	10009XT3E445T	$31,191	XT	2225	1.15	125	94.1	43.797	230/460	
		900	444/5T	10009XT3G445T	$31,191	XT	2061	1.15	125	94.1	43.797	460	
125	90	3600	444/5TS	12536XT3G444TS	$20,874	XT	2173	1.15	132	95.0	40.047	460	
		1800	444/5T	12518XT3E444T	$19,961	XT	2214	1.15	142	95.4	43.797	230/460	
		1800	444/5T	12518XT3G444T	$19,961	XT	2208	1.15	142	95.4	43.797	460	
		1200	444/5T	12512XT3G445T	$21,537	XT	2428	1.15	150	95.0	43.797	460	

continued on next page

Please refer to back cover for description of "NOTES"

For detailed specifications, data sheets, drawings and performance curves visit http://www.weg.net

THREE -PHASE

Foot Mount - *continued*

HP	kW	RPM	Frame	Catalog Number	List Price	Mult. Symbol	Approx. Shipping Weight (lbs)	Service Factor	FL Amps @ High	FL. Eff (%)	"C" Dimension (in)	Voltage (V)	Notes
150	110	3600	444/5TS	15036XT3G445TS	$21,320	XT	2345	1.15	161	95.4	40.047	460	39
		1800	444/5T	15018XT3E445T	$21,557	XT	2364	1.15	170	95.8	43.797	230/460	
		1800	444/5T	15018XT3G445T	$21,557	XT	2358	1.15	170	95.8	43.797	460	
		1800	444/5T	15018XT3H445T	$21,557	XT	2353	1.15	136	95.8	43.797	575	39
		1200	447T	15012XT3G447T	$32,370	XT	2828	1.15	174	95.8	47.339	460	
		1200	504/5T	15012XT3G504	$32,370	XT	2869	1.15	174	95.8	49.445	460	43
200	150	3600	447TS	20036XT3G447TS	$29,446	XT	2656	1.15	221	95.8	43.589	460	
		1800	447T	20018XT3G447T	$29,397	XT	2585	1.15	230	96.2	47.339	460	
		1800	504/5T	20018XT3G504	$29,397	XT	2534	1.15	230	96.2	49.445	460	37;43
		1200	447T	20012XT3G447T	$33,613	XT	2848	1.15	249	95.8	47.339	460	
250	185	3600	447TS	25036XT3G447TS	$31,124	XT	2774	1.15	269	95.8	43.589	460	
		1800	447T	25018XT3G447T	$32,866	XT	2853	1.15	284	96.2	47.339	460	
		1800	447T	25018XT3H447T	$32,866	XT	2742	1.15	227	96.2	47.339	575	
		1200	449T	25012XT3G449T	$48,048	XT	3352	1.15	299	95.8	54.996	460	
300	220	3600	449TS	30036XT3G449TS	$48,747	XT	3185	1.15	320	95.8	51.246	460	37
		1800	449T	30018XT3G449T	$42,566	XT	3280	1.15	334	96.2	54.996	460	37
		1200	449T	30012XT3G449T	$52,790	XT	3361	1.15	351	95.8	54.996	460	
350	260	3600	449TS	35036XT3G449TS	$65,868	XT	3802	1.15	379	95.8	51.246	460	
		1800	449T	35018XT3G449T	$53,222	XT	3476	1.15	390	96.2	54.996	460	37;39
		1200	586/7	35012XT3G586/7	$71,652	XT	4655	1.15	421	95.8	61.389	460	39;43
400	300	1800	586/7	40018XT3G586/7	$61,096	XT	4345	1.15	460	96.2	61.389	460	43
		1200	586/7	40012XT3G586/7	$75,473	XT	5267	1.15	479	95.8	61.389	460	43
450	330	1800	586/7	45018XT3G586/7	$65,201	XT	4747	1.15	501	96.2	61.389	460	19;39;43
500	370	1800	586/7	50018XT3G586/7	$70,086	XT	5063	1.00	568	96.2	61.389	460	1;19;43

Please refer to back cover for description of "NOTES"

For detailed specifications, data sheets, drawings and performance curves visit http:// www.weg.net

Data subject to change without notice.

C-Face - Foot Mount

HP	kW	RPM	Frame	Catalog Number	List Price	Mult. Symbol	Approx. Shipping Weight (lbs)	Service Factor	FL Amps @ High	FL. Eff (%)	"C" Dimension (in)	Voltage (V)	Notes
0.33	0.25	3600	56C	.3336XS3E56C	$821	XF	21	1.00	0.60	69.8	10.520	208-230/460	1;3;9;42
		1800	56C	.3318XS3E56C	$877	XF	23	1.00	0.60	76.7	10.520	208-230/460	1;3;9;17;42
0.5	0.37	3600	56C	.5036XS3E56C	$856	XF	24	1.00	0.90	73.1	11.790	208-230/460	1;3;9;42
		1800	56C	.5018XS3E56C	$926	XF	27	1.00	0.85	79.1	11.920	208-230/460	1;3;9;42
0.75	0.55	3600	56C	.7536XS3E56C	$884	XF	25	1.00	1.20	77.1	11.790	208-230/460	1;3;9;42
		1800	56C	.7518XS3E56C	$944	XF	28	1.00	1.40	78.6	12.290	208-230/460	1;3;9;42
1	0.75	3600	56C	00136XT3E56C	$924	XF	27	1.00	1.60	77.0	11.920	230/460	1;3;9;42
		1800	56C	00118XT3E56C	$1,007	XF	31	1.00	1.60	82.2	13.660	230/460	1;3;9;42
		1800	143TC	00118XT3E143TC	$1,054	XT	71	1.15	1.43	85.5	12.760	230/460	
		1200	143/5TC	00112XT3E145TC	$1,107	XT	80	1.15	1.54	82.5	13.752	230/460	
1.5	1.1	3600	56C	00156XT3E56C	$1,038	XF	30	1.00	2.10	84.0	12.780	230/460	1;3;9;42
		3600	143/5TC	00156XT3E143TC	$1,069	XT	73	1.15	2.05	84.0	13.752	230/460	
		1800	56HC	00158XT3E56HC	$1,011	XF	41	1.00	2.10	86.5	14.540	230/460	1;3;9;42
		1800	143/5TC	00158XT3E145TC	$1,116	XT	79	1.15	2.05	86.5	13.752	230/460	
		1800	143/5TC	00158XT3H145TC	$1,024	XT	75	1.15	1.64	86.5	13.752	575	
		1200	182/4TC	00152XT3E182TC	$1,270	XT	123	1.15	2.32	87.5	15.862	230/460	
2	1.5	3600	56HC	00236XT3E56HC	$1,125	XF	35	1.00	2.70	85.5	14.040	230/460	1;3;9;42
		3600	143/5TC	00236XT3E145TC	$1,045	XT	81	1.15	2.69	85.5	13.752	230/460	39
		1800	56HC	00218XT3E56HC	$1,162	XF	48	1.00	2.70	86.5	15.040	230/460	1;3;9;42
		1800	143/5TC	00218XT3E145TC	$1,148	XT	79	1.15	2.72	86.5	13.752	230/460	
		1800	143/5TC	00218XT3H145TC	$1,148	XT	78	1.15	2.18	86.5	13.752	575	
		1200	1824TC	00212XT3E184TC	$1,323	XT	140	1.15	3.13	88.5	15.862	230/460	
3	2.2	3600	182/4TC	00336XT3E182TC	$1,262	XT	122	1.15	3.76	86.5	15.862	230/460	39
		1800	182/4TC	00318XT3E182TC	$1,373	XT	122	1.15	3.91	89.5	15.862	230/460	
		1800	182/4TC	00318XT3H182TC	$1,373	XT	122	1.15	3.13	89.5	15.862	575	
		1200	213/5TC	00312XT3E213TC	$1,868	XT	195	1.15	4.41	89.5	19.450	230/460	39
5	3.7	3600	182/4TC	00536XT3E184TC	$1,325	XT	137	1.15	6.10	88.5	15.862	230/460	39
		3600	182/4TC	00536XT3H184TC	$1,325	XT	137	1.15	4.88	88.5	15.862	575	39
		1800	182/4TC	00518XT3E184TC	$1,385	XT	139	1.15	6.57	89.5	15.862	230/460	39
		1800	182/4TC	00518XT3H184TC	$1,385	XT	139	1.15	5.26	89.5	15.862	575	39
		1200	213/5TC	00512XT3E215TC	$1,975	XT	221	1.15	6.83	89.5	19.450	230/460	
7.5	5.5	3600	213/5TC	00736XT3E213TC	$1,722	XT	190	1.15	8.57	89.5	19.450	230/460	
		1800	213/5TC	00718XT3E213TC	$2,080	XT	186	1.15	9.41	91.7	19.450	230/460	
		1800	213/5TC	00718XT3H213TC	$2,080	XT	185	1.15	7.53	91.7	19.450	575	
10	7.5	3600	213/5TC	01036XT3E215TC	$1,803	XT	215	1.15	11.6	90.2	19.450	230/460	
		3600	213/5TC	01036XT3H215TC	$1,803	XT	214	1.15	9.28	90.2	19.450	575	
		1800	L215TC	01018XT3E215TC	$2,180	XT	215	1.15	12.7	91.7	20.631	230/460	
		1800	L215TC	01018XT3H215TC	$2,180	XT	221	1.15	10.2	91.7	20.631	575	
15	11	3600	254TC	01536XT3E254TC	$2,490	XT	346	1.15	17.4	91.0	23.175	230/460	
		1800	254TC	01518XT3E254TC	$2,976	XT	306	1.15	18.4	92.4	23.175	230/460	
		1800	254TC	01518XT3H254TC	$2,976	XT	305	1.15	14.7	92.4	23.175	575	
20	15	1800	256TC	02018XT3E256TC	$3,331	XT	395	1.15	25.0	93.0	24.923	230/460	
		1800	256TC	02018XT3H256TC	$3,111	XT	394	1.15	20.0	93.0	24.923	575	
25	18.5	1800	284TC	02518XT3E284TC	$4,262	XT	514	1.15	29.9	93.6	26.407	230/460	
		1800	284TC	02518XT3H284TC	$4,262	XT	513	1.15	23.9	93.6	26.407	575	

continued on next page

Please refer to back cover for description of "NOTES"

For detailed specifications, data sheets, drawings and performance curves visit http://www.weg.net

THREE -PHASE

C-Face - Foot Mount - *continued*

HP	kW	RPM	Frame	Catalog Number	List Price	Mult. Symbol	Approx. Shipping Weight (lbs)	Service Factor	FL Amps @ High	FL. Eff (%)	"C" Dimension (in)	Voltage (V)	Notes
30	22	1800	286TC	03018XT3E286TC	$4,672	XT	555	1.15	36.0	93.6	27.905	230/460	
40	30	1800	324TC	04018XT3E324TC	$5,919	XT	700	1.15	48.2	94.1	29.602	230/460	
50	37	1800	326TC	05018XT3E326TC	$7,084	XT	740	1.15	60.6	94.5	31.106	230/460	
60	45	1800	364/5TC	06018XT3E364TC	$11,116	XT	1126	1.15	68.3	95.0	33.701	230/460	
75	55	1800	364/5TC	07518XT3E365TC	$11,781	XT	1147	1.15	83.2	95.4	33.701	230/460	
100	75	1800	404/5TC	10018XT3E405TC	$14,993	XT	1335	1.15	113	95.4	38.074	230/460	

C-Face - Footless

HP	kW	RPM	Frame	Catalog Number	List Price	Mult. Symbol	Approx. Shipping Weight (lbs)	Service Factor	FL Amps @ High	FL. Eff (%)	"C" Dimension (in)	Voltage (V)	Notes
1	0.75	1800	143/5TC	00118XT3ER143TC	$1,072	XT	71	1.15	1.43	85.5	14.460	230/460	15
1.5	1.1	1800	143/5TC	00158XT3ER145TC	$1,135	XT	78	1.15	2.05	86.5	14.460	230/460	15
2	1.5	1800	143/5TC	00218XT3ER145TC	$1,168	XT	78	1.15	2.72	86.5	14.460	230/460	15
3	2.2	1800	182/4TC	00318XT3ER182TC	$1,397	XT	128	1.15	3.91	89.5	17.082	230/460	15
5	3.7	1800	182/4TC	00518XT3ER184TC	$1,409	XT	142	1.15	6.57	89.5	17.082	230/460	15;39
7.5	5.5	1800	213/5TC	00718XT3ER213TC	$2,118	XT	186	1.15	9.41	91.7	19.450	230/460	15
10	7.5	1800	L215TC	01018XT3ER215TC	$2,220	XT	220	1.15	12.7	91.7	23.493	230/460	15
15	11	1800	254TC	01518XT3ER254TC	$3,029	XT	320	1.15	18.4	92.4	25.025	230/460	15
20	15	1800	256TC	02018XT3ER256TC	$3,391	XT	403	1.15	25.0	93.0	26.773	230/460	15
25	18.5	1800	284TC	02518XT3ER284TC	$4,340	XT	523	1.15	29.9	93.6	28.651	230/460	15
30	22	1800	286TC	03018XT3ER286TC	$4,758	XT	548	1.15	36.0	93.6	30.149	230/460	15
40	30	1800	324TC	04018XT3ER324TC	$6,027	XT	702	1.15	48.2	94.1	32.240	230/460	15
50	37	1800	326TC	05018XT3ER326TC	$7,215	XT	739	1.15	60.6	94.5	33.744	230/460	15

JP - Foot Mount

HP	kW	RPM	Frame	Catalog Number	List Price	Mult. Symbol	Approx. Shipping Weight (lbs)	Service Factor	FL Amps @ High	FL. Eff (%)	"C" Dimension (in)	Voltage (V)	Notes
3	2.2	1800	182/4JP	00318XT3E182JP	$1,586	XT	119	1.15	3.91	89.5	20.431	230/460	
		1800	182/4JP	00318XT3H182JP	$1,586	XT	119	1.15	3.13	89.5	20.431	575	
5	3.7	1800	182/4JP	00518XT3E184JP	$1,609	XT	136	1.15	6.57	89.5	20.306	230/460	
		1800	182/4JP	00518XT3H184JP	$1,609	XT	136	1.15	5.26	89.5	20.306	575	

Please refer to back cover for description of "NOTES"

For detailed specifications, data sheets, drawings and performance curves visit http:// www.weg.net

Data subject to change without notice.

Motors | Automation | Energy | Transmission & Distribution | Coatings

WEG offers a complete range of products and services for the Oil & Gas segment

WEG / EM has manufactured motors and generators for the petroleum industry for over 100 years. We understand that every application is different and will work with the customer to meet their needs.

Motors can be designed to API Standards (where applicable), meeting welding, structural, vibration and testing requirements. Motors can be built for operation in classified hazardous areas per NEC or IEC/EN (ATEX) requirements. For synchronous motors, standard brushless excitation is non-sparking for hazardous atmospheres.

WEG Group

Synchronous and Induction Motors
Up to 150,000 HP

Turbogenerators
Up to 150 MW

NEMA, Above NEMA and IEC Low Voltage Motors
Up to 2,000 HP

Low and Medium Voltage Drives and Soft Starters
Up to 10,000 HP

1-800-ASK-4WEG Visit us online at www.weg.net/us Transforming energy into solutions.

Three-Phase IEC - Flameproof Motors

ATEX MOTORS

TEFC - Ex d - IE2

Standard Features:

- 50 Hz and and 60 Hz rated (1.00 Service Factor)
- Class F insulation (Impregnation Resin and magnet Wire are class H)
- F3 mounted as standard
- Stainless Steel Nameplate - Laser etched with high contrast background
- Regreasable ball bearings (Frames 225 and up)
- Gasketed conduit box
- Zone 1 and 2, Groups IIA and IIB, class of temperature T4
- Suitable for WYE/Delta Start
- Design N
- Conductive plastic fan (frames 63 up to 315)
- Aluminum fan (frame 355)
- Lip Seal on both endshields
- Thermistors 1 per phase
- IP56
- CT: 2:1
- VFD Suitable

ADDITIONAL TECHNICAL DATA

CONTACT WEG OR VISIT WWW.WEG.NET

Please refer to back cover for description of "NOTES"

For detailed specifications, data sheets, drawings and performance curves visit http:// www.weg.net

Data subject to change without notice.

ATEX Foot Mount

HP	kW	RPM	Frame	Catalog Number	List Price	Mult. Symbol	Approx. Shipping Weight (lbs)	Service Factor	FL Amps @ High	FL. Eff (%)	"C" Dimension (in)	Voltage (V)	Notes
1	0.75	3000//3600	90S/L	**E0.7536XP3WAX90SF3-W**	**$1,267**	XD	68	1.00	1.69	79.2	15.118	220-240/380-415//440-460	1;8;27
		1500//1800	90S/L	**E0.7518XP3WAX90SF3-W**	**$1,283**	XD	91	1.00	1.66	80.4	15.118	220-240/380-415//440-460	1;8;27
		1000//1200	90S/L	**E0.7512XP3WAX90LF3-W**	**$1,199**	XD	75	1.00	1.92	76.4	15.118	220-240/380-415//440-460	1;8;27
1.5	1.1	3000//3600	90S/L	**E00136XP3WAX90SF3-W**	**$1,318**	XD	68	1.00	2.33	81.0	15.118	220-240/380-415//440-460	1;8;27
		1500//1800	90S/L	**E00118XP3WAX90LF3-W**	**$1,334**	XD	75	1.00	2.45	82.1	15.118	220-240/380-415//440-460	1;8;27
		1000//1200	90S/L	**E00112XP3WAX90LF3-W**	**$1,588**	XD	75	1.00	2.80	78.1	15.118	220-240/380-415//440-460	1;8;27
2	1.5	3000//3600	90S/L	**E00156XP3WAX90SF3-W**	**$1,371**	XD	60	1.00	3.12	82.5	15.118	220-240/380-415//440-460	1;8;27
		1500//1800	100L	**E00158XP3WAX100LF3-W**	**$1,488**	XD	123	1.00	3.16	83.7	17.244	220-240/380-415//440-460	1;8;27
		1000//1200	100L	**E00152XP3WAX100LF3-W**	**$1,757**	XD	101	1.00	3.71	80.3	17.244	220-240/380-415//440-460	1;8;27
3	2.2	3000//3600	90S/L	**E00236XP3WAX90LF3-W**	**$1,534**	XD	51	1.00	4.56	83.9	15.118	220-240/380-415//440-460	1;8;27
		1500//1800	100L	**E00218XP3WAX100LF3-W**	**$1,783**	XD	136	1.00	4.56	84.9	17.244	220-240/380-415//440-460	1;8;27
		1000//1200	112M	**E00212XP3YAX112MF3-W**	**$2,040**	XD	126	1.00	6.04	84.4	17.953	380-415/660-690//440-460	1;8;27
4	3	3000//3600	100L	**E00336XP3WAX100LF3-W**	**$1,918**	XD	130	1.00	5.85	85.0	17.244	220-240/380-415//440-460	1;8;27
		1500//1800	112M	**E00318XP3YAX112MF3-W**	**$2,137**	XD	145	1.00	6.09	87.9	17.953	380-415/660-690//440-460	1;8;27
		1000//1200	132S/M	**E00312XP3YAX132SF3-W**	**$3,224**	XD	180	1.00	7.34	83.6	20.630	380-415/660-690//440-460	1;8;27
5.5	4	3000//3600	112M	**E00436XP3YAX112MF3-W**	**$2,414**	XD	164	1.00	7.50	86.3	17.953	380-415/660-690//440-460	1;8;27
		1500//1800	112M	**E00418XP3YAX112MF3-W**	**$2,468**	XD	147	1.00	8.00	87.0	17.953	380-415/660-690//440-460	1;8;27
		1000//1200	132S/M	**E00412XP3YAX132MF3-W**	**$3,607**	XD	202	1.00	9.50	84.9	20.630	380-415/660-690//440-460	1;8;27
7.5	5.5	3000//3600	132S/M	**E00536XP3YAX132SF3-W**	**$3,083**	XD	239	1.00	10.6	87.3	20.630	380-415/660-690//440-460	1;8;27
		1500//1800	132S/M	**E00518XP3YAX132SF3-W**	**$3,025**	XD	247	1.00	10.4	87.7	20.630	380-415/660-690//440-460	1;8;27
		1000//1200	132S/M	**E00512XP3YAX132MF3-W**	**$3,800**	XD	219	1.00	12.9	86.2	20.630	380-415/660-690//440-460	1;8;27
10	7.5	3000//3600	132S/M	**E00736XP3YAX132SF3-W**	**$3,556**	XD	252	1.00	13.8	88.7	20.630	380-415/660-690//440-460	1;8;27
		1500//1800	132S/M	**E00718XP3YAX132MF3-W**	**$3,685**	XD	224	1.00	13.9	89.4	20.630	380-415/660-690//440-460	1;8;27
		1000//1200	160M/L	**E00712XP3YAX160MF3-W**	**$5,017**	XD	350	1.00	14.7	88.5	28.228	380-415/660-690//440-460	1;8;27

continued on next page

Please refer to back cover for description of "NOTES"

For detailed specifications, data sheets, drawings and performance curves visit http://www.weg.net

THREE -PHASE

ATEX Foot Mount - *continued*

HP	kW	RPM	Frame	Catalog Number	List Price	Mult. Symbol	Approx. Shipping Weight (lbs)	Service Factor	FL Amps @ High	FL. Eff (%)	"C" Dimension (in)	Voltage (V)	Notes
15	11	3000//3600	160M/L	**E01136XP3YAX160MF3-W**	**$4,148**	XD	446	1.00	20.1	90.6	28.228	380-415/660-690//440-460	1;8;27
		1500//1800	160M/L	**E01118XP3YAX160MF3-W**	**$4,151**	XD	359	1.00	20.9	90.3	28.228	380-415/660-690//440-460	1;8;27
		1000//1200	160M/L	**E01112XP3YAX160LF3-W**	**$5,281**	XD	392	1.00	21.7	89.3	28.228	380-415/660-690//440-460	1;8;27
20	15	3000//3600	160M/L	**E01536XP3YAX160MF3-W**	**$4,924**	XD	461	1.00	27.2	91.4	28.228	380-415/660-690//440-460	1;8;27
		1500//1800	160M/L	**E01518XP3YAX160LF3-W**	**$4,608**	XD	381	1.00	28.2	91.2	28.228	380-415/660-690//440-460	1;8;27
		1000//1200	180M/L	**E01512XP3YAX180LF3-W**	**$6,436**	XD	512	1.00	27.1	90.6	29.606	380-415/660-690//440-460	1;8;27
25	18.5	3000//3600	160M/L	**E01836XP3YAX160LF3-W**	**$5,915**	XD	409	1.00	33.2	92.2	28.228	380-415/660-690//440-460	1;8;27
		1500//1800	180M/L	**E01818XP3YAX180MF3-W**	**$6,059**	XD	584	1.00	34.7	91.7	29.606	380-415/660-690//440-460	1;8;27
		1000//1200	200M/L	**E01812XP3YAX200LF3-W**	**$8,379**	XD	617	1.00	35.2	91.3	32.323	380-415/660-690//440-460	1;8;27
30	22	3000//3600	180M/L	**E02236XP3YAX180MF3-W**	**$7,099**	XD	582	1.00	38.1	92.4	29.606	380-415/660-690//440-460	1;8;27
		1500//1800	180M/L	**E02218XP3YAX180LF3-W**	**$6,706**	XD	478	1.00	39.9	92.4	29.606	380-415/660-690//440-460	1;8;27
		1000//1200	200M/L	**E02212XP3YAX200LF3-W**	**$9,487**	XD	529	1.00	41.8	91.6	32.323	380-415/660-690//440-460	1;8;27
40	30	3000//3600	200M/L	**E03036XP3YAX200LF3-W**	**$8,824**	XD	647	1.00	52.2	93.0	32.323	380-415/660-690//440-460	1;8;27
		1500//1800	200M/L	**E03018XP3YAX200LF3-W**	**$8,717**	XD	684	1.00	56.9	92.9	32.323	380-415/660-690//440-460	1;8;27
		1000//1200	225S/M	**E03012XP3YAX225SMF3W**	**$12,936**	XD	937	1.00	54.9	92.7	37.441	380-415/660-690//440-460	1;8;27
50	37	3000//3600	200M/L	**E03736XP3YAX200LF3-W**	**$10,812**	XD	573	1.00	64.0	93.5	32.323	380-415/660-690//440-460	1;8;27
		1500//1800	225S/M	**E03718XP3YAX225SMF3W**	**$11,099**	XD	998	1.00	64.9	93.3	37.441	380-415/660-690//440-460	1;8;27
		1000//1200	250S/M	**E03712XP3YAX250SMF3W**	**$15,176**	XD	1103	1.00	65.0	93.2	39.724	380-415/660-690//440-460	1;8;27
60	45	3000//3600	225S/M	**E04536XP3YAX225SMF3W**	**$17,255**	XD	1075	1.00	75.8	93.8	36.260	380-415/660-690//440-460	1;8;27
		1500//1800	225S/M	**E04518XP3YAX225SMF3W**	**$12,846**	XD	970	1.00	81.5	93.7	37.441	380-415/660-690//440-460	1;8;27
		1000//1200	280S/M	**E04512XP3YAX280SMF3W**	**$21,544**	XD	1793	1.00	83.7	93.5	44.705	380-415/660-690//440-460	1;8;27
75	55	3000//3600	250S/M	**E05536XP3YAX250SMF3W**	**$21,608**	XD	1227	1.00	92.5	94.0	39.724	380-415/660-690//440-460	1;8;27
		1500//1800	250S/M	**E05518XP3YAX250SMF3W**	**$19,034**	XD	1312	1.00	94.6	94.1	39.724	380-415/660-690//440-460	1;8;27
		1000//1200	280S/M	**E05512XP3YAX280SMF3W**	**$27,320**	XD	1704	1.00	99.4	93.9	44.705	380-415/660-690//440-460	1;8;27

continued on next page

Please refer to back cover for description of "NOTES"

For detailed specifications, data sheets, drawings and performance curves visit http:// www.weg.net

Data subject to change without notice.

ATEX Foot Mount - *continued*

HP	kW	RPM	Frame	Catalog Number	List Price	Mult. Symbol	Approx. Shipping Weight (lbs)	Service Factor	FL Amps @ High	FL. Eff (%)	"C" Dimension (in)	Voltage (V)	Notes
100	75	3000//3600	280S/M	**E07536XP3YAX280SMF3W**	**$30,248**	XD	1854	1.00	126	94.3	44.705	380-415/660-690//440-460	1;8;27
		1500//1800	280S/M	**E07518XP3YAX280SMF3W**	**$23,986**	XD	1852	1.00	130	94.4	44.705	380-415/660-690//440-460	1;8;27
		1000//1200	315S/M	**E07512XP3YAX315SMF3W**	**$31,133**	XD	1599	1.00	137	94.2	51.654	380-415/660-690//440-460	1;8;27
125	90	3000//3600	280S/M	**E09036XP3YAX280SMF3W**	**$36,063**	XD	1934	1.00	151	94.5	44.705	380-415/660-690//440-460	1;8;27
		1500//1800	280S/M	**E09018XP3YAX280SMF3W**	**$33,209**	XD	2060	1.00	154	94.7	44.705	380-415/660-690//440-460	1;8;27
		1000//1200	315S/M	**E09012XP3YAX315SMF3W**	**$40,124**	XD	2271	1.00	159	94.6	51.654	380-415/660-690//440-460	1;8;27
150	110	3000//3600	315S/M	**E11036XP3YAX315SMF3W**	**$42,763**	XD	2205	1.00	183	94.9	50.472	380-415/660-690//440-460	1;8;27
		1500//1800	315S/M	**E11018XP3YAX315SMF3W**	**$37,846**	XD	2426	1.00	192	95.0	51.654	380-415/660-690//440-460	1;8;27
		1000//1200	315S/M	**E11012XP3YAX315SMF3W**	**$48,658**	XD	2569	1.00	194	94.9	51.654	380-415/660-690//440-460	1;8;27
175	132	3000//3600	315S/M	**E13236XP3YAX315SMF3W**	**$54,064**	XD	2337	1.00	217	95.2	50.472	380-415/660-690//440-460	1;8;27
		1500//1800	315S/M	**E13218XP3YAX315SMF3W**	**$45,939**	XD	2624	1.00	224	95.2	51.654	380-415/660-690//440-460	1;8;27
		1000//1200	315S/M	**E13212XP3YAX315SMF3W**	**$82,346**	XD	3749	1.00	233	95.0	51.654	380-415/660-690//440-460	1;8;27
220	160	3000//3600	315S/M	**E16036XP3YAX315SMF3W**	**$67,306**	XD	2567	1.00	262	95.3	50.472	380-415/660-690//440-460	1;8;27
		1500//1800	315S/M	**E16018XP3YAX315SMF3W**	**$50,129**	XD	2668	1.00	271	95.4	51.654	380-415/660-690//440-460	1;8;27
		1000//1200	355M/L	**E16012XP3YAX355MLF3W**	**$90,159**	XD	3969	1.00	290	96.0	61.358	380-415/660-690//440-460	1;8;27
270	200	3000//3600	355M/L	**E20036XP3YAX355MLF3W**	**$100,962**	XD	4035	1.00	320	95.6	58.602	380-415/660-690//440-460	1;8;27
		1500//1800	355M/L	**E20018XP3YAX355MLF3W**	**$80,905**	XD	4006	1.00	346	95.6	61.358	380-415/660-690//440-460	1;8;27
		1000//1200	355M/L	**E20012XP3YAX355MLF3W**	**$110,130**	XD	4212	1.00	368	95.7	61.358	380-415/660-690//440-460	1;8;27
340	250	3000//3600	355M/L	**E25036XP3YAX355MLF3W**	**$111,375**	XD	4348	1.00	392	96.4	58.602	380-415/660-690//440-460	1;8;27
		1500//1800	355M/L	**E25018XP3YAX355MLF3W**	**$94,903**	XD	4236	1.00	432	95.8	61.358	380-415/660-690//440-460	1;8;27
		1000//1200	355M/L	**E25012XP3YAX355MLF3W**	**$133,308**	XD	4818	1.00	461	95.5	61.358	380-415/660-690//440-460	1;8;27
430	315	1500//1800	355M/L	**E31518XP3YAX355MLF3W**	**$108,540**	XD	4844	1.00	538	95.8	61.358	380-415/660-690//440-460	1;8;27

Please refer to back cover for description of "NOTES"

For detailed specifications, data sheets, drawings and performance curves visit http://www.weg.net

HYDRODUTY™ - STAINLESS STEEL
TEFC - Three-Phase - C-Face Foot Mount A-129
TENV - Three-Phase - C-Face Foot Mount A-129
TEFC – Three-Phase C-Face Footless A-130
TENV – Three-Phase C-Face Footless A-130
PICKERPLUS™ - WHITE EPOXY
TEFC - Three-Phase - C-Face Foot Mount A-131
TEFC – Three-Phase C-Face Footless A-131
SHARK™ - STAINLESS STEEL
TEFC - Three-Phase - C-Face Foot Mount A-132
TENV - Three-Phase - C-Face Foot Mount A-132
TEFC - Three-Phase - C-Face Foot Mount A-133
TENV - Three-Phase - C-Face Foot Mount A-133
HYDROWASH™ - WHITE EPOXY
TEFC - Three-Phase - C-Face Foot Mount A-134
TENV - Three-Phase - C-Face Foot Mount A-134
TEFC – Three-Phase C-Face Footless A-134
TENV – Three-Phase C-Face Footless A-134
WASHDOWN DUTY VARIABLE FREQUENCY DRIVE
CFW08 Washdown VFD - NEMA 4X Enclosure A-137
CFW08 Options and Accessories A-138
Dynamic Braking Resistors for CFW08 Wash A-139
CFW08 Technical Data A-140

Bluffton Hydroduty™

The Ultimate Washdown Motor

- This is the ultimate stainless steel waterproof motor. It has been proven to provide 75% more cycles than other brands through extreme environment testing.
- Significantly reduces motor replacement and downtime costs

Performance Specifications
- 1/2 to 5 hp, 860, 1140, 1725 or 3450 RPM
- TENV or TEFC enclosures
- NEMA Frames 56C, 143TC, 145TC and 182TC
- Metric Frame 80-B5 and 100L - B14
- IP66

Bluffton PickerPlus™

Severe Duty Feather Picker Motor

- Withstands Frequent sanitizing with high pressure sprays and caustic fluids.
- Designed to withstand extreme side loading requirements
- Meets NEMA MG1 Part 31 for Inverter Duty operation

Performance Specifications
- 3 hp, 1725 RPM
- TEFC enclosure
- 145TC NEMA or 100L Metric Frames
- Footless or Base Mounted
- IP66

General Purpose Washdown Motors

Shark™

Stainless Steel Washdown Motor

- For use in food processing, pharmaceutical and other applications requiring extreme cleanliness
- Class F epoxy insulation
- F1 mounted

Performance Specifications
- 1-10 hp NEMA Premium®
- 1800 and 3600 RPM
- TEFC enclosures
- Frames 143TC to 215TC
- Base Mounted
- IP55

Bluffton HydroWash™

White Painted Washdown Motor

- Designed for long service life in general purpose washdown applications
- It provides extended service life that can reduce your downtime costs for motor replacement

Performance Specifications
- 1/2 to 2 hp, 1725 RPM
- TENV or TEFC enclosures
- NEMA Frames 56C or 145TC
- Footless or Base Mounted
- IP56

Please refer to back cover for description of "NOTES"

For detailed specifications, data sheets, drawings and performance curves visit http:// www.weg.net

Bluffton™ Severe Duty Washdown Motors - HydroDuty™ and PickerPlus™

Patented Three Stage Sealing System
Ensures watertight fit. Includes custom lip seal, stainless steel shaft slinger and severe duty check seal.

Indelible Laser Etched Nameplate

Sealed Conduit Box
Includes patented lead system, potted and encapsulated to prevent water intrusion

Patented Breather Vent
Prevents oil and water contamination

Double Sealed Ball Bearings
Provide long service life. Drip grooves keep condensation away from bearings

Both Endshields include O-Rings
Prevents moisture from entering the frame

Frame and Construction Hydroduty™
Premium stainless steel for maximum corrosion resistance

HydroWash™ and PickerPlus™
High grade steel with corrosion resistance

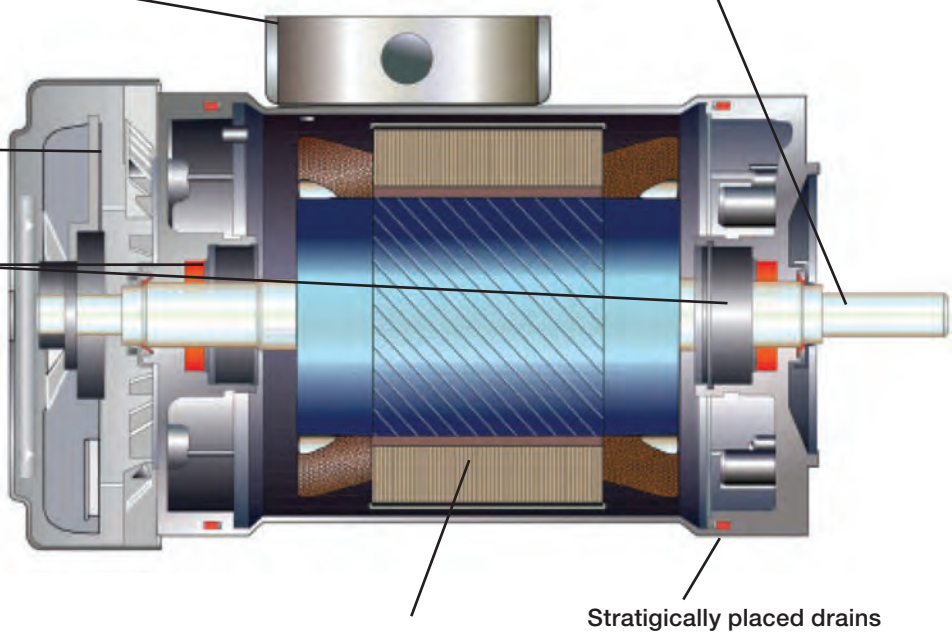

Stratigically placed drains

Windings

Hydroduty™ & Picker Plus™: Premium, Patented SprayGuard™ Encapsulated Windings for Optimum Service Life. NEMA MG1 Inverter Duty.

- **Built Durable** Withstands frequent sanitizing with high pressure sprays and extreme side loading requirements Especially designed for severe duty washdown applications.
- **Economical** Long lasting design that outperforms any other motor on the market. Extended service life that can save you $10,000 - $15,000 in downtime costs for motor replacement.
- **Best Warranty** We stand by our motors with the best warranties in the business.

Bluffton Hydroduty™ - Stainless Steel - TEFC - C-Face - Foot Mount

HP	kW	RPM	Frame	Catalog Number	List Price	Mult. Symbol	Approx. Shipping Weight (lbs)	Service Factor	FL Amps @ High	FL. Eff (%)	"C" Dimension (in)	Voltage (V)	Notes
0.50	0.37	1200	56C	1311017133	$1,694	S1	53	1.15	1.10	80.0	13.990	230/460	21;41
0.75	0.55	1800	56C	1311017121	$1,544	S1	48	1.15	1.30	82.5	13.240	230/460	21;41
		1200	56C	1311017134	$1,722	S1	56	1.15	1.50	82.5	14.490	230/460	21;41
		900	56C	1311017159	$1,794	S1	61	1.00	2.70	70.0	15.420	460	1;21
1	0.75	3600	56C	1313017156	$1,601	S1	49	1.15	1.50	78.5	13.240	230/460	21;41
		1800	56C	1311017115	$1,619	S1	57	1.15	1.60	85.5	14.490	230/460	21;41
		1800	143TC	1311017124	$1,642	S1	57	1.15	1.60	85.5	14.560	230/460	21;41
		1200	56C	1311017138	$1,875	S1	64	1.15	1.90	82.5	15.490	230/460	21;41
		1200	143TC	1311017130	$1,886	S1	64	1.15	1.90	82.5	15.560	230/460	21;41
1.5	1.1	3600	56C	1313017154	$1,658	S1	50	1.15	2.30	84.0	13.250	230/460	21;41
		3600	145TC	1313017155	$1,658	S1	50	1.15	2.30	84.0	13.310	230/460	21;41
		1800	56C	1311017110	$1,683	S1	65	1.15	2.20	86.5	15.490	230/460	21;41
		1800	145TC	1311017111	$1,706	S1	65	1.15	2.20	86.5	15.560	230/460	21;41
2	1.5	3600	56C	1313017152	$1,958	S1	53	1.15	2.90	85.5	13.990	230/460	21;41
		3600	145TC	1313017153	$1,976	S1	53	1.15	2.90	85.5	14.060	230/460	21;41
		1800	56C	1311017114	$1,981	S1	65	1.15	2.80	86.5	15.490	230/460	21;41
		1800	145TC	1311017113	$2,005	S1	65	1.15	2.80	86.5	15.560	230/460	21;41
5	3.7	1800	184TC	H311007102	$4,953	S1	138	1.00	6.70	89.5	15.960	230/460	1;21

Bluffton Hydroduty™ - Stainless Steel - TENV - C-Face - Foot Mount

HP	kW	RPM	Frame	Catalog Number	List Price	Mult. Symbol	Approx. Shipping Weight (lbs)	Service Factor	FL Amps @ High	FL. Eff (%)	"C" Dimension (in)	Voltage (V)	Notes
0.50	0.37	3600	56C	1323007112	$1,416	S1	48	1.15	0.80	84.0	11.400	230/460	17;21;41
		1800	56C	1321007115	$1,439	S1	47	1.00	0.90	82.5	11.400	230/460	1;17;21;41
0.75	0.55	3600	56C	1323007110	$1,460	S1	53	1.15	1.10	87.5	12.150	230/460	17;21;41
		1800	56C	1321007113	$1,483	S1	50	1.00	1.20	84.0	12.150	230/460	1;17;21;41
1	0.75	1800	56C	1321007112	$1,591	S1	58	1.00	1.60	85.5	13.150	230/460	1;17;21;41
		1800	56C	1321007139	$1,696	S1	58	1.00	1.60	85.5	13.150	230/460	1;17;21;41
		1800	143TC	1321007119	$1,615	S1	58	1.00	1.60	85.5	13.220	230/460	1;17;21;41
		1800	143TC	1321007159	$1,550	S1	58	1.00	1.60	85.5	13.220	230/460	1;17;21;41

Please refer to back cover for description of "NOTES"

For detailed specifications, data sheets, drawings and performance curves visit http:// www.weg.net

Bluffton Hydroduty™ - Stainless Steel - TEFC - C-Face - Footless

HP	kW	RPM	Frame	Catalog Number	List Price	Mult. Symbol	Approx. Shipping Weight (lbs)	Service Factor	FL Amps @ High	FL. Eff (%)	"C" Dimension (in)	Voltage (V)	Notes
0.50	0.37	1200	56C	1311017136	$1,666	S1	53	1.15	1.10	80.0	13.990	230/460	20;21;41
0.75	0.55	1800	56C	1311017122	$1,526	S1	48	1.15	1.30	82.5	13.240	230/460	20;21;41
		1200	56C	1311017137	$1,704	S1	56	1.15	1.50	82.5	14.490	230/460	20;21;41
1	0.75	3600	56C	1313017161	$1,581	S1	49	1.15	1.50	78.5	13.240	230/460	20;21;41
		1800	56C	1311017123	$1,601	S1	57	1.15	1.60	85.5	14.490	230/460	20;21;41
		1800	143TC	1311017125	$1,626	S1	57	1.15	1.60	85.5	14.560	230/460	20;21;41
		1800	80-B5	1311017152	$1,879	S1	58	1.15	1.60	85.5	15.340	230/460	20;21;41
		1200	56C	1311017135	$1,771	S1	64	1.15	1.90	82.5	15.490	230/460	20;21;41
		1200	143TC	1311017139	$1,782	S1	64	1.15	1.90	82.5	15.560	230/460	20;21;41
1.5	1.1	3600	56C	1313017159	$1,641	S1	50	1.15	2.30	84.0	13.240	230/460	20;21;41
		3600	145TC	1313017160	$1,597	S1	50	1.15	2.30	84.0	13.310	230/460	20;21;41
		1800	56C	1311017117	$1,663	S1	65	1.15	2.20	86.5	15.490	230/460	20;21;41
		1800	145TC	1311017118	$1,688	S1	65	1.15	2.20	86.5	15.560	230/460	20;21;41
2	1.5	3600	56C	1313017157	$1,940	S1	53	1.15	2.90	85.5	13.990	230/460	20;21;41
		3600	145TC	1313017158	$1,958	S1	53	1.15	2.90	85.5	14.060	230/460	20;21;41
		1800	56C	1311017119	$1,962	S1	65	1.15	2.80	86.5	15.490	230/460	20;21;41
		1800	145TC	1311017120	$1,985	S1	65	1.15	2.80	86.5	15.560	230/460	20;21;41
5	3.7	1800	184TC	H311007104	$4,924	S1	138	1.00	6.70	89.5	15.960	230/460	1;20;21

Bluffton Hydroduty™ - Stainless Steel - TENV - C-Face - Footless

HP	kW	RPM	Frame	Catalog Number	List Price	Mult. Symbol	Approx. Shipping Weight (lbs)	Service Factor	FL Amps @ High	FL. Eff (%)	"C" Dimension (in)	Voltage (V)	Notes
0.50	0.37	3600	56C	1323007113	$1,398	S1	48	1.15	0.80	84.0	11.400	230/460	17;20;21;41
		1800	56C	1321007121	$1,421	S1	47	1.00	0.90	82.5	11.400	230/460	1;17;20;21;41
0.75	0.55	3600	56C	1323007114	$1,443	S1	53	1.15	1.10	87.5	12.150	230/460	17;20;21;41
		1800	56C	1321007117	$1,465	S1	52	1.00	1.20	84.0	12.150	230/460	1;17;20;21;41
1	0.75	1800	56C	1321007125	$1,572	S1	60	1.00	1.60	85.5	13.150	230/460	1;17;20;21;41
		1800	56C	1321007140	$1,676	S1	58	1.00	1.60	85.5	13.150	230/460	1;17;20;21;41
		1800	143TC	1321007124	$1,595	S1	60	1.00	1.60	85.5	13.220	230/460	1;17;20;21;41
		1800	100-B14	1321007158	$1,891	S1	52	1.00	1.60	85.5	13.440	230/460	1;17;20;21

Please refer to back cover for description of "NOTES"
For detailed specifications, data sheets, drawings and performance curves visit http:// www.weg.net

Data subject to change without notice.

Bluffton PickerPlus™ - White Epoxy - TEFC - C-Face - Foot Mount

HP	kW	RPM	Frame	Catalog Number	List Price	Mult. Symbol	Approx. Shipping Weight (lbs)	Service Factor	FL Amps @ High	FL. Eff (%)	"C" Dimension (in)	Voltage (V)	Notes
3	2.2	1800	145TC	1311017192	$1,736	S1	68	1.00	4.40	81.5	15.560	230/460	1;9
3	2.2	1800	100L-B14	1311017196	$1,852	S1	68	1.00	4.40	81.5	15.780	230/460	1;9

Bluffton PickerPlus™ - White Epoxy - TEFC - C-Face - Footless

HP	kW	RPM	Frame	Catalog Number	List Price	Mult. Symbol	Approx. Shipping Weight (lbs)	Service Factor	FL Amps @ High	FL. Eff (%)	"C" Dimension (in)	Voltage (V)	Notes
3	2.2	1800	100L-B14	1311017195	$1,803	S1	66	1.00	4.40	81.5	15.780	230/460	1;9;20
3	2.2	1800	100L-B5	1311017191	$1,820	S1	67	1.00	4.40	81.5	16.180	230/460	1;9;20

Please refer to back cover for description of "NOTES"

For detailed specifications, data sheets, drawings and performance curves visit http:// www.weg.net

Shark™ - Stainless Steel - TEFC - C-Face - Foot Mount

HP	kW	RPM	Frame	Catalog Number	List Price	Mult. Symbol	Approx. Shipping Weight (lbs)	Service Factor	FL Amps @ High	FL. Eff (%)	"C" Dimension (in)	Voltage (V)	Notes
1	0.75	3600	56HC	00136ET3ESS56C	$701	S1	38	1.15	1.45	77.0	14.000	230/460	21
		1800	56HC	00118ET3ESS56C	$723	S1	38	1.15	1.46	85.5	14.000	230/460	21
		1800	143TC	00118ET3ESS143TC	$857	S1	38	1.15	1.46	85.5	13.400	230/460	21
1.5	1.1	3600	56HC	00156ET3ESS56C	$825	S1	41	1.15	1.99	84.0	14.000	230/460	21
		1800	56HC	00158ET3ESS56C	$846	S1	44	1.15	2.06	86.5	14.000	230/460	21
		1800	145TC	00158ET3ESS145TC	$872	S1	43	1.15	2.06	86.5	14.200	230/460	21
2	1.5	3600	56HC	00236ET3ESS56C	$989	S1	47	1.15	2.55	85.5	14.000	230/460	21
		3600	145TC	00236ET3ESS145TC	$1,113	S1	45	1.15	2.55	85.5	14.200	230/460	21
		1800	56HC	00218ET3ESS56C	$1,001	S1	51	1.15	2.71	86.5	14.000	230/460	21
		1800	145TC	00218ET3ESS145TC	$1,219	S1	52	1.15	2.78	86.5	13.600	230/460	21
3	2.2	3600	182TC	00336ET3ESS182TC	$1,564	S1	100	1.15	3.73	86.5	17.300	230/460	21
		1800	182TC	00318ET3ESS182TC	$1,453	S1	113	1.15	3.92	89.5	17.100	230/460	21
5	3.7	3600	184TC	00536ET3ESS184TC	$1,779	S1	111	1.15	6.01	88.5	17.900	230/460	21
		1800	184TC	00518ET3ESS184TC	$1,607	S1	120	1.15	6.54	89.5	17.900	230/460	21
7.5	5.5	3600	213TC	00736ET3ESS213TC	$2,208	S1	158	1.15	8.82	89.5	20.500	230/460	21
		1800	213TC	00718ET3ESS213TC	$2,201	S1	173	1.15	9.12	91.7	20.500	230/460	21
10	7.5	3600	215TC	01036ET3ESS215TC	$2,713	S1	177	1.15	11.5	90.2	22.000	230/460	21
		1800	215TC	01018ET3ESS215TC	$2,452	S1	208	1.15	12.2	91.7	22.000	230/460	21

Shark™ - Stainless Steel - TENV - C-Face - Foot Mount

HP	kW	RPM	Frame	Catalog Number	List Price	Mult. Symbol	Approx. Shipping Weight (lbs)	Service Factor	FL Amps @ High	FL. Eff (%)	"C" Dimension (in)	Voltage (V)	Notes
0.33	0.25	1800	56C	.3318EP3ESS56C	$550	S1	29	1.15	0.53	79.8	11.250	230/460	17;21
0.50	0.37	3600	56C	.5036EP3ESS56C	$569	S1	30	1.15	0.65	78.3	11.250	230/460	17;21
		1800	56C	.5018EP3ESS56C	$575	S1	33	1.15	0.73	81.2	11.250	230/460	17;21
		1200	56C	.5012EP3ESS56C	$682	S1	34	1.15	0.86	79.1	11.670	230/460	17;21
0.75	0.55	3600	56C	.7536EP3ESS56C	$590	S1	30	1.15	1.02	81.9	11.250	230/460	17;21
		1800	56C	.7518EP3ESS56C	$616	S1	34	1.15	1.06	81.3	11.250	230/460	17;21
		1200	56HC	.7512EP3ESS56C	$723	S1	41	1.15	1.22	82.9	11.670	230/460	17;21
1	0.75	3600	56HC	00136NT3ESS56C	$713	S1	39	1.15	1.45	77.0	11.940	230/460	17;21
		1800	56HC	00118NT3ESS56C	$735	S1	38	1.15	1.46	85.5	11.940	230/460	17;21
		1800	143TC	00118NT3ESS143TC	$889	S1	38	1.15	1.46	85.5	11.210	230/460	17;21

Please refer to back cover for description of "NOTES"

For detailed specifications, data sheets, drawings and performance curves visit http:// www.weg.net

Data subject to change without notice.

Shark™ - Stainless Steel - TEFC - C-Face - Footless

HP	kW	RPM	Frame	Catalog Number	List Price	Mult. Symbol	Approx. Shipping Weight (lbs)	Service Factor	FL Amps @ High	FL. Eff (%)	"C" Dimension (in)	Voltage (V)	Notes
1	0.75	3600	56HC	00136ET3ESS56CFL	$701	S1	37	1.15	1.45	77.0	14.000	230/460	20;21
		1800	56HC	00118ET3ESS56CFL	$723	S1	37	1.15	1.46	85.5	14.000	230/460	20;21
		1800	143TC	00118ET3ESS143TCFL	$857	S1	38	1.15	1.46	85.5	13.400	230/460	20;21
1.5	1.1	3600	56HC	00156ET3ESS56CFL	$825	S1	40	1.15	1.99	84.0	14.000	230/460	20;21
		3600	143TC	00156ET3ESS143TCFL	$858	S1	41	1.15	1.99	84.0	13.400	230/460	20;21
		1800	56HC	00158ET3ESS56CFL	$846	S1	43	1.15	2.06	86.5	14.000	230/460	20;21
		1800	145TC	00158ET3ESS145TCFL	$872	S1	43	1.15	2.06	86.5	14.200	230/460	20;21
2	1.5	3600	56HC	00236ET3ESS56CFL	$989	S1	45	1.15	2.55	85.5	14.000	230/460	20;21
		3600	145TC	00236ET3ESS145TCFL	$1,113	S1	45	1.15	2.55	85.5	14.200	230/460	20;21
		1800	56HC	00218ET3ESS56CFL	$1,001	S1	49	1.15	2.71	86.5	14.000	230/460	20;21
		1800	145TC	00218ET3ESS145TCFL	$1,219	S1	52	1.15	2.78	86.5	13.600	230/460	20;21
3	2.2	3600	145TC	00336ET3ESS145TCFL	$1,564	S1	59	1.15	3.78	86.5	16.200	230/460	20;21
		3600	182TC	00336ET3ESS182TCFL	$1,564	S1	98	1.15	3.73	86.5	17.300	230/460	20;21
		1800	182TC	00318ET3ESS182TCFL	$1,453	S1	111	1.15	3.92	89.5	17.100	230/460	20;21
5	3.7	3600	184TC	00536ET3ESS184TCFL	$1,779	S1	109	1.15	6.01	88.5	17.900	230/460	20;21
		1800	184TC	00518ET3ESS184TCFL	$1,607	S1	118	1.15	6.54	89.5	17.900	230/460	20;21
7.5	5.5	3600	213TC	00736ET3ESS213TCFL	$2,208	S1	155	1.15	8.82	89.5	20.500	230/460	20;21
		1800	213TC	00718ET3ESS213TCFL	$2,201	S1	170	1.15	9.12	91.7	20.500	230/460	20;21
10	7.5	3600	215TC	01036ET3ESS215TCFL	$2,713	S1	174	1.15	11.5	90.2	22.000	230/460	20;21
		1800	215TC	01018ET3ESS215TCFL	$2,452	S1	205	1.15	12.2	91.7	22.000	230/460	20;21

Shark™ - Stainless Steel - TENV - C-Face - Footless

HP	kW	RPM	Frame	Catalog Number	List Price	Mult. Symbol	Approx. Shipping Weight (lbs)	Service Factor	FL Amps @ High	FL. Eff (%)	"C" Dimension (in)	Voltage (V)	Notes
0.33	0.25	1800	56C	.3318EP3ESS56CFL	$550	S1	28	1.15	0.53	79.8	11.250	230/460	17;20;21
0.50	0.37	3600	56C	.5036EP3ESS56CFL	$569	S1	29	1.15	0.65	78.3	11.250	230/460	17;20;21
		1800	56C	.5018EP3ESS56CFL	$575	S1	32	1.15	0.73	81.2	11.250	230/460	17;20;21
		1200	56C	.5012EP3ESS56CFL	$682	S1	33	1.15	0.86	79.1	11.670	230/460	17;20;21
0.75	0.55	3600	56C	.7536EP3ESS56CFL	$590	S1	29	1.15	1.02	81.9	11.250	230/460	17;20;21
		1800	56C	.7518EP3ESS56CFL	$616	S1	33	1.15	1.06	81.3	11.250	230/460	17;20;21
		1200	56C	.7512EP3ESS56CFL	$723	S1	40	1.15	1.22	82.9	11.670	230/460	17;20;21
1	0.75	3600	56HC	00136NT3ESS56CFL	$713	S1	38	1.15	1.45	77.0	11.940	230/460	17;20;21
		1800	56HC	00118NT3ESS56CFL	$735	S1	38	1.15	1.46	85.5	11.940	230/460	17;20;21
		1800	143TC	00118NT3ESS143TCFL	$889	S1	38	1.15	1.46	85.5	11.210	230/460	17;20;21

Please refer to back cover for description of "NOTES"

For detailed specifications, data sheets, drawings and performance curves visit http:// www.weg.net

Bluffton HydroWash™ - White Epoxy - TEFC - C-Face - Foot Mount

HP	kW	RPM	Frame	Catalog Number	List Price	Mult. Symbol	Approx. Shipping Weight (lbs)	Service Factor	FL Amps @ High	FL. Eff (%)	"C" Dimension (in)	Voltage (V)	Notes
1.5	1.1	1800	56C	1311017163	$683	S1	44	1.15	2.20	86.5	13.460	230/460	9;20
		1800	145TC	1311017155	$683	S1	44	1.15	2.20	86.5	13.570	230/460	9
2	1.5	1800	56C	1311017161	$728	S1	51	1.15	2.80	86.5	14.550	230/460	9
		1800	145TC	1311017154	$728	S1	51	1.15	2.80	86.5	14.550	230/460	9

Bluffton HydroWash™ - White Epoxy - TENV - C-Face - Foot Mount

HP	kW	RPM	Frame	Catalog Number	List Price	Mult. Symbol	Approx. Shipping Weight (lbs)	Service Factor	FL Amps @ High	FL. Eff (%)	"C" Dimension (in)	Voltage (V)	Notes
0.50	0.37	1800	56C	1321007145	$516	S1	29	1.15	0.80	80.0	10.230	230/460	9;17
0.75	0.55	1800	56C	1321007146	$566	S1	35	1.15	1.20	82.5	10.990	230/460	9;17
1	0.75	1800	56C	1321007143	$605	S1	42	1.15	1.50	85.5	11.980	230/460	9;17
		1800	145TC	1321007148	$642	S1	42	1.15	1.50	85.5	11.720	230/460	9;17

Bluffton HydroWash™ - White Epoxy - TEFC - C-Face - Footless

HP	kW	RPM	Frame	Catalog Number	List Price	Mult. Symbol	Approx. Shipping Weight (lbs)	Service Factor	FL Amps @ High	FL. Eff (%)	"C" Dimension (in)	Voltage (V)	Notes
1.5	1.1	1800	56C	1311017164	$668	S1	44	1.15	2.20	86.5	13.460	230/460	9
		1800	145TC	1311017156	$668	S1	44	1.15	2.20	86.5	13.570	230/460	9;20
2	1.5	1800	56C	1311017162	$672	S1	51	1.15	2.80	86.5	14.550	230/460	9;20
		1800	145TC	1311017157	$672	S1	51	1.15	2.80	86.5	14.550	230/460	9;20

Bluffton HydroWash™ - White Epoxy - TENV - C-Face - Footless

HP	kW	RPM	Frame	Catalog Number	List Price	Mult. Symbol	Approx. Shipping Weight (lbs)	Service Factor	FL Amps @ High	FL. Eff (%)	"C" Dimension (in)	Voltage (V)	Notes
0.50	0.37	1800	56C	1321007144	$510	S1	29	1.15	0.80	80.0	10.230	230/460	9;17;20
0.75	0.55	1800	56C	1321007147	$553	S1	35	1.15	1.20	82.5	10.990	230/460	9;17;20
1	0.75	1800	56C	1321007142	$599	S1	42	1.15	1.50	85.5	11.980	230/460	9;17;20
		1800	145TC	1321007149	$628	S1	42	1.15	1.50	85.5	11.720	230/460	9;17;20

Please refer to back cover for description of "NOTES"

For detailed specifications, data sheets, drawings and performance curves visit http:// www.weg.net

Data subject to change without notice.

CFW08 WASH

The WEG CFW08 WASH Series is a redesign of our successful uline VFDs. Engineering improvements have produced one of the most compact and full featured microdrives in the marketplace.

Outstanding features and options in a NEMA 4 enclosure allow the CFW08 WASH to be successfully used in a large variety of applications.

Standard Features

- Same programming as other WEG VFD's
- V/Hz and Sensorless Vector Control
- NEMA 4X(IP56) Enclosure
- Single and Three-phase input voltage
- 200-240V, 380-480V or 500-600 input voltage
- 150% current overload capacity
- 16 bit DSP controlled PWM output
- 2.5 / 5 / 10 / 15 kHz adjustable swiching frequency
- Four isolated programmable digital inputs
- Two programmable relay outputs (1NO, 1NC, 240vac 0.5A)
- Two isolated programmable analog inputs (0-10V, 0/4-20mA)
- Protective features: Over current, motor overload, drive over temperature, output phase-to-phase and phase-to-ground short circuit, DC bus over and under voltage and external fault
- Control features: Linear and "S" ramp acceleration and deceleration, local/remote control, DC braking, torque boost, motor slip compensation, electronic pot, preset speeds, adjustable V/Hz profile, maximum and minimum adjustable frequency limits, two skip frequencies, adjustable output current limit, JOG, ride-thru, flying start and PID regulator.
- Display readings: Motor speed, frequency, voltage, current, last fault, heatsink temperature and drive status
- Ambient: 32°F (0°C) to 104°F (40°C), 3300ft (1000m) altitude, 90% humidity, non-condensing
- SuperDrive (G1) compatible

Applications NEMA 4X

- Pumps
- Fans
- Blowers
- Conveyors
- Rollout tables
- Agitators
- Mixers
- Any washdown applications

Optional Features

- Dynamic Braking Resistors available
- Remote Keypad with Copy Function
- RS-232 or RS-485 Serial Interface
- Modbus Communication*
- DIN rail mounting through 2HP

*Requires optional RS-232 or RS-485 Interface

Please refer to back cover for description of "NOTES"

For detailed specifications, data sheets, drawings and performance curves visit http:// www.weg.net

CFW08 WASH Catalog Number Sequence

CFW08	0016	B	D	N4	A1	Z

Rated Current

0016 = 1.6 Amps
0026 = 2.6 Amps
0040 = 4.0 Amps
0073 = 7.3 Amps
0100 = 10.0 Amps
0240 = 24.0 Amps
0300 = 30.0 Amps

Supply Voltage

D = 200-240 Vac
G = 380-480 Vac
H = 500-600 Vac

Supply Phases

B = 1 or 3 Phase
T = Three Phase

Options

N4 = NEMA 4X
A1 = Plus Version
Z = End

Table intended as reference only and not to create part numbers.

Wash Down - NEMA 4X Enclosure

Motor Voltage	Motor HP [1]	Drive Amps [2]	Catalog Number	Braking Transistor	Frame Size	Dimensions (in.) HxWxD	Approx. Weight (lbs.)	List Price	Multiplier
230 Vac	**Input Power Supply: Single or Three-Phase 200-240 Vac**								
	2	7.3	CFW080073BDN4A1Z	Yes	A	10.4 x 6.5 x 8.5	5	**$929**	V1
	3	10.0	CFW080100BDN4A1Z	Yes	A	10.4 x 6.5 x 8.5	5	**$1,039**	V1
	Input Power Supply: Three-Phase 230 Vac								
	5	16	CFW080160TDN4A1Z	Yes	A	10.4 x 6.5 x 8.5	5	**$1,228**	V1
	7 1/2	22	CFW080220TDN4A1Z	Yes	B	13.4 x 8.5 x 8.5	18	**$1,769**	V1
	10	28	CFW080280TDN4A1Z	Yes	B	13.4 x 8.5 x 8.5	18	**$2,266**	V1
460 Vac	**Input Power Supply: Three-Phase 380-480 Vac**								
	1	2.7	CFW080027TGN4A1Z	Yes	A	10.4 x 6.5 x 8.5	5	**$894**	V1
	2	4.3	CFW080043TGN4A1Z	Yes	A	10.4 x 6.5 x 8.5	5	**$1,118**	V1
	3	6.5	CFW080065TGN4A1Z	Yes	A	10.4 x 6.5 x 8.5	5	**$1,331**	V1
	5	10	CFW080100TGN4A1Z	Yes	A	10.4 x 6.5 x 8.5	5	**$1,516**	V1
	7 1/2	13	CFW080130TGN4A1Z	Yes	B	13.4 x 8.5 x 8.5	18	**$1,856**	V1
	10	16	CFW080160TGN4A1Z	Yes	B	13.4 x 8.5 x 8.5	18	**$2,144**	V1
	15	24	CFW080240TGN4A1Z	Yes	B	13.4 x 8.5 x 8.5	18	**$2,876**	V1
	20	30	CFW080300TGN4A1Z	Yes	B	13.4 x 8.5 x 8.5	18	**$3,474**	V1
575 Vac [3]	**Input Power Supply: Three-Phase 500-600 Vac**								
	1	1.7	CFW080017THN4A1Z	Yes	B	13.4 x 8.5 x 8.5	18	**$1,259**	V1
	2	3.0	CFW080030THN4A1Z	Yes	B	13.4 x 8.5 x 8.5	18	**$1,421**	V1
	3	4.3	CFW080043THN4A1Z	Yes	B	13.4 x 8.5 x 8.5	18	**$1,485**	V1
	5	7.0	CFW080070THN4A1Z	Yes	B	13.4 x 8.5 x 8.5	18	**$1,767**	V1
	7 1/2	10	CFW080100THN4A1Z	Yes	B	13.4 x 8.5 x 8.5	18	**$2,077**	V1
	10	12	CFW080120THN4A1Z	Yes	B	13.4 x 8.5 x 8.5	18	**$2,388**	V1

Notes:
1) "HP" rating based on "average FLA values". Use as a guide only.
2) Motor FLA may vary with speed and manufacturer. ALWAYS compare motor FLA to Nominal AMPS of drive.
3) All 575V drives are non-stocked items. Consult WEG for availability.
For other technical data please refer to WEG product manual.

THREE -PHASE

Options and Accessories

Type	Catalog Number	Description	List Price	Multiplier
Keypad	HMI-CFW08-RS	NEMA12 Remote Keypad (requires MIS-CFW08-RS & cable)	$135	V1
	MIS-CFW08-RS	Remote Keypad Interface	$64	V1
	TCL-CFW08	Keypad Cover	$13	V1
	CAB-RS-1	3.3 ft (1m) Remote Keypad Cable	$23	V1
	CAB-RS-2	6.6 ft (2m) Remote Keypad Cable	$31	V1
	CAB-RS-3	9.9 ft (3m) Remote Keypad Cable	$41	V1
	CAB-RS-5	16 ft (3m) Remote Keypad Cable	$51	V1
	CAB-RS-7.5	25 ft (7.5m) Remote Keypad Cable	$62	V1
	CAB-RS-10	33 ft (10m) Remote Keypad Cable	$72	V1
I/O	KAC-120-CFW08	120VAC Digital Input Adaptor Board (4 inputs)	$145	V1
Communication	KCS-CFW08	RS-232 Serial Comm. Module (mounted in place of keypad)	$97	V1
	MIW-02	RS-232/485 Converter (mounted externally)	$221	V1
	KSD-CFW08	PC Communication Kit	$124	V1
	KRS-485-CFW08	Interface for RS-485 Communication	$186	V1
DC Power Supply	KDC-24V-CFW08	24VDC power supply with standard CFW08 HMI integrated	$177	V1
	KDC-24VR-CFW08	24VDC power supply with interface for remote keypad	$211	V1
Remote Oper. Station	CSW-SP3PBS	Remote Operator Station-includes 22mm Start PB, Stop PB, 1-NC and 1-NO contact block, 5k-ohm Potentiometer and legends (replaces CFW-REM)	$460	Z5
	CSW30-SP3PBS	Remote Operator Station-includes 30mm Start PB, Stop PB, 1-NC and 1-NO contact block, 5k-ohm Potentiometer and legends (replaces CFW-REM)	$535	Z5

Dynamic Braking Resistors for CFW08 WASH
10% Duty Cycle

Motor Voltage	Motor HP [1]	CFW08 Catalog Number	WEG DB Resistor Catalog Number [2]	Ohms	Watts	List Price	Multiplier
230 Vac	**Input Power Supply: Single or Three-Phase 200-240 Vac**						
	2	CFW080073BDN4A1Z	**CFDB39-224**	39	224	**$183**	V1
	3	CFW080100BDN4A1Z	**CFDB27-298**	27	298	**$183**	V1
	5	CFW080160TDN4A1Z	**CFDB22-373**	22	373	**$183**	V1
	7 1/2	CFW080220TDN4A1Z	**CFDB15-560**	15	560	**$319**	V1
	10	CFW080280TDN4A1Z	**CFDB10-746**	10	746	**$319**	V1
460 Vac	**Input Power Supply: Three-Phase 380-480 Vac**						
	1	CFW080027TGN1A1Z	**CFDB120-298**	120	298	**$183**	V1
	2	CFW080043TGN1A1Z	**CFDB120-298**	120	298	**$183**	V1
	3	CFW080065TGN1A1Z	**CFDB100-224**	100	224	**$183**	V1
	5	CFW080100TGN1A1Z	**CFDB47-746**	47	746	**$319**	V1
	7 1/2	CFW080130TGN1A1Z	**CFDB33-746**	33	746	**$319**	V1
	10	CFW080160TGN1A1Z	**CFDB33-746**	33	746	**$319**	V1
	15	CFW080240TGN1A1Z	**CFDB22-1119**	22	1119	**$481**	V1
	20	CFW080300TGN1A1Z	**CFDB18-1492**	18	1492	**$638**	V1

Notes:
1) "HP" rating based on "average FLA values". Use as a guide only.
2) Dynamic Braking Resistors are non-stock items. Consult WEG for availability

THREE -PHASE

Technical Data

Power Supply	Voltage	Single Phase or Three Phase	200-240V (+10%, -15%)
		Three phase	380-480V (+10%, -15%)
	Frequency	50 / 60Hz +/- 2Hz	
	Displacement Power Factor (Cos)	Greater than 0.98	
Enclosure	Degree of Protection	NEMA 4	
Control	Control Modes	Volts per Hertz (Scalar)	
		Sensorless Voltage Vector VVW	
	Power Output	Sinusoidal PWM (Space Vector Modulation)	
		IGBT Transistors	
	Switching Frequency	2.5, 5, 10 or 15kHz	
	Frequency Range	0-300 Hz	
	Overload Capacity	150% for 60 seconds, repeatable every 10 min.	
Control Inputs	4 programmable isolated digital inputs, NPN or 24Vdc logic (PNP)		
	2 programmable differential analog inputs; programmable for current or voltage Can be set as DI or as PTC input (0-10V, 4-20mA or 0-20mA)		
Control Outputs	2 programmable relay outputs: One NO (Form A) and one NC (Form B): 240 V / 0.5 A		
	1 Output with independent NO and NC at a same common		
	1 Analog Output; programmable for voltage (0-10V) or current (0-20 mA or 4-20 mA) and with 0.25% linearity error		
Communication	Serial	Optional RS-232 serial interface, RS-485 with external RS-232/485 converter	
	Field Bus	Modbus RTU with external RS-232/485 converter	
Safety	Protections	Motor over current	DC link over voltage
		Motor overload	DC link under voltage
		Output phase-to-phase short circuit	Drive over temperature
		Output phase-to-ground short circuit	External fault
		Programming error	
Ambient	Temperature	32° - 104°F (40°C), up to 122°F (50°C) with 2% / 1.8°F (1°C) output current derating	
	Humidity	5-90% Non Condensing	
	Altitude	0-3300 ft (1000m), up to 13,200 ft (4000m) with 1% output current derating per 330ft (100m) above 3300 ft (1000m).	
Regulatory Conformance	EMC Directive 89 / 336 / EEC	Electromagnetic compatibility – Industrial Environment EMC Emission and Immunity with optional filter	
	ENC61800-3		
	LVD 73/23/EEC	Low Voltage Directive	
	UL 508 C	Power Conversion Equipment	
Special Functions	Linear and "S" ramp accel and decel, local/remote control, FWD/REV selection, DC braking, manual and auto torque boost, motor slip compensation, electronic pot, two skip frequencies, maximum and minimum adjustable frequency limits, adjustable output current, PID Controller		
Keypad	4 digit display, 2 indicator LEDs and 8 keys		
	Readouts for: output frequency (Hz), output current (A), output voltage (V), motor torque (%) in vector mode, DC bus voltage (V), value proportional to frequency (Ex.: RPM), heatsink temperature, fault and status messages		
Mounting	Surface mounting with screws.		

Please refer to back cover for description of "NOTES"

For detailed specifications, data sheets, drawings and performance curves visit http:// www.weg.net

Data subject to change without notice.

SINGLE-PHASE

TEFC – Foot Mount A-144
TEFC – C-Face – Foot Mount A-145
TEFC – C-Face – Footless A-145
TEFC – Foot Mount – Thermally Protected A-146
ODP – Foot Mount A-147
ODP – Resilient Base A-148
ODP – C-Face – Foot Mount A-149
ODP – C-Face – Footless A-150
ODP – Foot Mount – Thermally Protected A-150

THREE-PHASE

TEFC – Foot Mount A-151
TEFC – C-Face – Foot Mount A-152
TEFC – C-Face – Footless A-153
ODP – Foot Mount A-154
ODP – C-Face – Foot Mount A-155
ODP – C-Face – Footless A-156
ODP – Resilient Base A-156

DC MOTORS

NEMA 56 PMDC Motors A-157
NEMA 145TC PMDC Motors A-157

EXPLOSION PROOF - SINGLE-PHASE

Foot Mount A-159
C-Face – Foot Mount A-159

EXPLOSION PROOF - THREE-PHASE

Foot Mount A-160
C-Face – Foot Mount A-160

Fractional Motors

Single-Phase TEFC & ODP

High Starting Torque makes these motors ideal for a wide range of applications.

Standard Features:

- Ball bearings
- Class F insulation

ODP

TEFC

Features that make a difference:

- High Starting Torque
- TEFC motors are rated IP55 (gasketed conduit box and capacitor cover)

Resilient Base

ADDITIONAL TECHNICAL DATA

ELECTRICAL DATA:	TEFC - STANDARD EFF. - B-7
	ODP - STANDARD EFF. - B-9
	ODP - PREMIUM EFF. - B-11
MECHANICAL DATA:	TEFC - STANDARD EFF. - B-56
	ODP - STANDARD EFF. - B-60
	ODP - PREMIUM EFF. - B-64

Fractional Motors

Three-Phase TEFC & ODP

High Starting Torque makes these motors ideal for a wide range of applications.

ODP

TEFC

Standard Features:

- 50/60 Hz Rated
- Ball bearings
- Class F insulation

Resilient Base

Features that make a difference:

- Motors are suitable for VFD operation (TEFC)
- 50/60 Hz Rated
- Service Factor 1.15 or better
- TEFC rated IP55 (gasketed conduit box and capacitor cover)

							Inverter Rated
	Max Ambient temp.	Efficiency	Frame	Output	Poles	CT Constant Torque	VT Variable torque
ODP	Up to 40°C	None (Standard Eff)	48 - 56	<1Hp	-	4:1	1000:1
				≥ 1Hp	-	2:1	
		Premium Efficiency	48 - 56	<1Hp	2	5:1	
				≥ 1Hp	2	3:1	
				-	4 and 6	5:1	
TEFC		None (Standard Eff)	48 - 56	<1Hp	-	10:1	
				≥ 1Hp	-	5:1	
		Premium Efficiency	48 - 56	-	2	10:1	
				-	4, 6 and 8	4:1	

ADDITIONAL TECHNICAL DATA

ELECTRICAL DATA:
TEFC - STANDARD EFF. - B-23
TEFC - PREMIUM EFF. - B-22
ODP - STANDARD EFF. - B-25
ODP - PREMIUM EFF. - B-24

MECHANICAL DATA:
TEFC - STANDARD EFF. - B-80
TEFC - PREMIUM EFF. - B-78
ODP - STANDARD EFF. - B-84
ODP - PREMIUM EFF. - B-82

Please refer to back cover for description of "NOTES"

For detailed specifications, data sheets, drawings and performance curves visit http://www.weg.net

Fractional Motors

SINGLE -PHASE

TEFC - Foot Mount

HP	kW	RPM	Frame	Catalog Number	List Price	Mult. Symbol	Approx. Shipping Weight (lbs)	Service Factor	FL Amps @ High	FL. Eff (%)	"C" Dimension (in)	Voltage (V)	Notes
0.25	0.18	3600	W56	**.2536ES1BW56-S**	**$257**	F1	20	1.15	2.10	50.0	10.713	115/208-230	9
		1800	W56	**.2518ES1BW56-S**	**$267**	F1	20	1.15	2.30	57.0	11.106	115/208-230	9
0.33	0.25	3600	W56	**.3336ES1BW56-S**	**$267**	F1	23	1.15	2.60	54.0	11.106	115/208-230	9
		1800	W56	**.3318ES1BW56-S**	**$283**	F1	22	1.15	3.00	61.0	11.500	115/208-230	9
		1800	W56	**.3318ES1RFDW56-S**	**$284**	R1	22	1.15	3.00	61.0	11.500	115/230	4;9
0.5	0.37	3600	W56	**.5036ES1BW56-S**	**$284**	F1	24	1.15	3.50	60.0	11.500	115/208-230	9
		3600	W56	**.5036ES1BOLW56-S**	**$316**	F1	24	1.15	3.50	60.0	11.500	115/208-230	4;9
		1800	W56	**.5018ES1RFDW56-S**	**$308**	R1	25	1.15	4.00	64.0	11.894	115/230	4;9
		1800	W56	**.5018ES1BW56-S**	**$312**	F1	24	1.15	4.00	64.0	11.894	115/208-230	9
		1200	W56	**.5012ES1B56-S**	**$512**	F1	38	1.15	3.20	71.0	13.508	115/208-230	9
0.75	0.55	3600	56	**.7536ES1BOL56-S**	**$329**	F1	31	1.15	4.00	66.0	12.721	115/208-230	4;9
		3600	56	**.7536ES1B56-S**	**$297**	F1	31	1.15	4.00	66.0	12.721	115/208-230	9
		1800	56	**.7518ES1RFD56-S**	**$357**	R1	34	1.15	5.30	68.5	13.114	115/230	4;9
		1800	56	**.7518ES1B56-S**	**$348**	F1	33	1.15	5.30	68.5	13.114	115/208-230	9
		1200	56H	**.7512ES1B56-S**	**$648**	F1	44	1.15	4.70	70.0	14.295	115/208-230	9
1	0.75	3600	56	**00136ES1BOL56-S**	**$408**	F1	35	1.15	5.10	70.0	13.114	115/208-230	4;9
		3600	56	**00136ES1B56-S**	**$376**	F1	34	1.15	5.10	70.0	13.114	115/208-230	9
		1800	56	**00118ES1RFD56-S**	**$394**	R1	40	1.15	6.80	71.0	13.901	115/230	4;9
		1800	56	**00118ES1B56-S**	**$401**	F1	39	1.15	6.80	71.0	13.902	115/208-230	9
1.5	1.1	3600	56	**00156ES1B56-S**	**$432**	F1	39	1.15	6.60	75.0	13.902	115/208-230	9
		3600	56	**00156ES1BOL56-S**	**$463**	F1	39	1.15	6.60	75.0	13.902	115/208-230	4;9
		1800	56H	**00158ES1RFD56H-S**	**$502**	R1	51	1.15	7.50	77.0	15.083	115/230	4;9
		1800	56H	**00158ES1B56-S**	**$456**	F1	40	1.15	7.50	77.0	15.083	115/208-230	9
2	1.5	3600	56H	**00236ES1BOL56-S**	**$592**	F1	44	1.15	8.70	77.0	14.295	115/208-230	4;9
		3600	56H	**00236ES1B56-S**	**$561**	F1	44	1.15	8.70	77.0	14.295	115/208-230	9
		1800	56H	**00218ES1RFD56H-S**	**$529**	R1	56	1.15	10.0	78.5	15.870	115/230	4;9

Please refer to back cover for description of "NOTES"

For detailed specifications, data sheets, drawings and performance curves visit http:// www.weg.net

Data subject to change without notice.

TEFC - C-Face - Foot Mount

HP	kW	RPM	Frame	Catalog Number	List Price	Mult. Symbol	Approx. Shipping Weight (lbs)	Service Factor	FL Amps @ High	FL. Eff (%)	"C" Dimension (in)	Voltage (V)	Notes
0.25	0.18	3600	W56C	**.2536ES1BW56C-S**	**$280**	F1	20	1.15	2.10	50.0	10.713	115/208-230	9
		1800	W56C	**.2518ES1BW56C-S**	**$288**	F1	20	1.15	2.30	57.0	11.106	115/208-230	9
0.33	0.25	3600	W56C	**.3336ES1BW56C-S**	**$288**	F1	22	1.15	2.60	54.0	11.106	115/208-230	9
		1800	W56C	**.3318ES1BW56C-S**	**$304**	F1	22	1.15	3.00	61.0	11.500	115/208-230	9
0.5	0.37	3600	W56C	**.5036ES1BW56C-S**	**$313**	F1	24	1.15	3.50	60.0	11.500	115/208-230	9
		1800	W56C	**.5018ES1BW56C-S**	**$333**	F1	26	1.15	4.00	64.0	11.894	115/208-230	9
		1800	W56C	**.5018ES1BOW56C-S**	**$348**	F1	24	1.15	4.00	64.0	11.894	115/208-230	3;9
		1200	W56C	**.5012ES1B56C-S**	**$535**	F1	39	1.15	3.20	67.0	13.508	115/208-230	9
0.75	0.55	3600	56C	**.7536ES1B56C-S**	**$353**	F1	32	1.15	4.00	66.0	12.721	115/208-230	9
		1800	56C	**.7518ES1B56C-S**	**$370**	F1	34	1.15	5.30	68.5	13.114	115/208-230	9
		1200	56HC	**.7512ES1B56C-S**	**$669**	F1	45	1.15	4.70	70.0	14.295	115/208-230	9
1	0.75	3600	56C	**00136ES1B56C-S**	**$378**	F1	35	1.15	5.10	70.0	13.114	115/208-230	9
		1800	56C	**00118ES1B56C-S**	**$424**	F1	40	1.15	6.80	71.0	13.902	115/208-230	9
		1800	56C	**00118ES1BO56C-S**	**$439**	F1	40	1.15	6.80	71.0	13.902	115/208-230	3;9
1.5	1.1	3600	56C	**00156ES1B56C-S**	**$454**	F1	40	1.15	6.60	75.0	13.902	115/208-230	9
		1800	56HC	**00158ES1BO56C-S**	**$493**	F1	41	1.15	7.50	77.0	15.083	115/208-230	3;9
		1800	56HC	**00158ES1B56C-S**	**$478**	F1	41	1.15	7.50	77.0	15.083	115/208-230	9
2	1.5	3600	56HC	**00236ES1B56C-S**	**$589**	F1	44	1.15	8.70	77.0	14.295	115/208-230	9

TEFC - C-Face - Footless

HP	kW	RPM	Frame	Catalog Number	List Price	Mult. Symbol	Approx. Shipping Weight (lbs)	Service Factor	FL Amps @ High	FL. Eff (%)	"C" Dimension (in)	Voltage (V)	Notes
0.33	0.25	3600	W56C	**.3336ES1BW56CFL-S**	**$288**	F1	21	1.15	2.60	53.0	11.106	115/208-230	9;20
		1800	W56C	**.3318ES1BW56CFL-S**	**$304**	F1	22	1.15	3.00	61.0	11.500	115/208-230	9;20
0.5	0.37	3600	W56C	**.5036ES1BW56CFL-S**	**$313**	F1	24	1.15	3.50	60.0	11.500	115/208-230	9;20
		1800	W56C	**.5018ES1BW56CFL-S**	**$333**	F1	24	1.15	4.00	64.0	11.894	115/208-230	9;20
		1200	56C	**.5012ES1B56CFL-S**	**$535**	F1	38	1.15	3.20	71.0	13.508	115/208-230	9;20
0.75	0.55	3600	56C	**.7536ES1B56CFL-S**	**$353**	F1	31	1.15	4.00	66.0	12.721	115/208-230	9;20
		1800	56C	**.7518ES1B56CFL-S**	**$370**	F1	34	1.15	5.30	68.5	13.114	115/208-230	9;20
		1200	56C	**.7512ES1B56CFL-S**	**$669**	F1	44	1.15	4.70	70.0	14.295	115/208-230	9;20
1	0.75	3600	56C	**00136ES1B56CFL-S**	**$378**	F1	35	1.15	5.10	70.0	13.114	115/208-230	9;20
		1800	56C	**00118ES1B56CFL-S**	**$424**	F1	39	1.15	6.80	71.0	13.902	115/208-230	9;20
1.5	1.1	3600	56C	**00156ES1B56CFL-S**	**$454**	F1	39	1.15	6.60	75.0	13.902	115/208-230	9;20
		1800	56C	**00158ES1B56CFL-S**	**$478**	F1	40	1.15	7.50	77.0	15.083	115/208-230	9;20
2	1.5	3600	56C	**00236ES1B56CFL-S**	**$589**	F1	43	1.15	8.70	77.0	14.295	115/208-230	9;20

Please refer to back cover for description of "NOTES"

For detailed specifications, data sheets, drawings and performance curves visit http://www.weg.net

TEFC - Foot Mount - Thermally Protected

HP	kW	RPM	Frame	Catalog Number	List Price	Mult. Symbol	Approx. Shipping Weight (lbs)	Service Factor	FL Amps @ High	FL. Eff (%)	"C" Dimension (in)	Voltage (V)	Notes
0.33	0.25	1800	W56	**.3318ES1RFDW56-S**	**$284**	R1	22	1.15	3.00	61.0	11.500	115/230	4;9
0.5	0.37	3600	W56	**.5036ES1BOLW56-S**	**$316**	F1	24	1.15	3.50	60.0	11.500	115/208-230	4;9
		1800	W56	**.5018ES1RFDW56-S**	**$308**	R1	25	1.15	4.00	64.0	11.894	115/230	4;9
0.75	0.55	3600	56	**.7536ES1BOL56-S**	**$329**	F1	31	1.15	4.00	66.0	12.721	115/208-230	4;9
		1800	56	**.7518ES1RFD56-S**	**$357**	R1	34	1.15	5.30	68.5	13.114	115/230	4;9
1	0.75	3600	56	**00136ES1BOL56-S**	**$408**	F1	35	1.15	5.10	70.0	13.114	115/208-230	4;9
		1800	56	**00118ES1RFD56-S**	**$394**	R1	40	1.15	6.80	71.0	13.901	115/230	4;9
1.5	1.1	3600	56	**00156ES1BOL56-S**	**$463**	F1	39	1.15	6.60	75.0	13.902	115/208-230	4;9
		1800	56H	**00158ES1RFD56H-S**	**$502**	R1	51	1.15	7.50	77.0	15.083	115/230	4;9
2	1.5	3600	56H	**00236ES1BOL56-S**	**$592**	F1	44	1.15	8.70	77.0	14.295	115/208-230	4;9
		1800	56H	**00218ES1RFD56H-S**	**$529**	R1	56	1.15	10.0	78.5	15.870	115/230	4;9

Please refer to back cover for description of "NOTES"

For detailed specifications, data sheets, drawings and performance curves visit http:// www.weg.net

Data subject to change without notice.

ODP - Foot Mount

HP	kW	RPM	Frame	Catalog Number	List Price	Mult. Symbol	Approx. Shipping Weight (lbs)	Service Factor	FL Amps @ High	FL. Eff (%)	"C" Dimension (in)	Voltage (V)	Notes
0.12	0.09	1800	48	.12180S1B48-S	$201	F1B	18	1.40	1.40	50.0	9.098	115/208-230	9
0.16	0.12	3600	48	.16360S1B48-S	$216	F1B	21	1.35	1.40	53.0	9.098	115/208-230	9
		1800	48	.16180S1B48-S	$208	F1B	22	1.35	1.70	53.0	9.098	115/208-230	9
0.25	0.18	3600	48	.25360T1B48-S	$253	F2B	19	1.35	1.30	66.6	9.492	115/208-230	9
		3600	W56	.25360T1BW56-S	$253	F2B	19	1.35	1.30	66.6	9.866	115/208-230	9
		1800	48	.25180T1B48-S	$241	F2B	18	1.35	1.60	68.5	9.492	115/208-230	9
		1800	W56	.25180T1BW56-S	$241	F2B	19	1.35	1.60	68.5	9.866	115/208-230	9
0.33	0.25	3600	48	.33360T1B48-S	$256	F2B	23	1.35	1.60	70.5	9.886	115/208-230	9
		3600	W56	.33360T1BW56-S	$257	F2B	23	1.35	1.60	70.5	10.260	115/208-230	9
		1800	48	.33180T1B48-S	$275	F2B	20	1.35	2.10	72.4	9.886	115/208-230	9
		1800	W56	.33180T1BW56-S	$275	F2B	21	1.35	2.10	72.4	10.260	115/208-230	9
0.5	0.37	3600	48	.50360T1B48-S	$276	F2B	23	1.25	2.40	72.4	9.886	115/208-230	9
		3600	W56	.50360S1BCDW56-S	$224	C1S	28	1.00	3.10	63.0	9.866	115/208-230	1;4;6;9
		3600	W56	.50360T1BW56-S	$282	F2B	24	1.25	2.40	72.4	10.260	115/208-230	9
		1800	48	.50180T1B48-S	$318	F2B	23	1.25	2.80	76.2	10.280	115/208-230	9
		1800	W56	.50180T1BW56-S	$307	F2B	23	1.25	2.80	76.2	10.654	115/208-230	9
0.75	0.55	3600	W56	.75360S1BCDW56-S	$237	C1S	22	1.00	4.30	68.5	10.260	115/208-230	1;4;6;9
		3600	56	.75360T1B56-S	$320	F2B	30	1.25	3.40	76.2	11.890	115/208-230	9
		1800	56	.75180T1B56-S	$387	F2B	38	1.25	3.40	81.8	11.890	115/208-230	9
1	0.75	3600	56	001360S1BCD56-S	$278	C1S	36	1.00	6.60	67.0	11.102	115/208-230	1;4;6;9
		3600	56	001360T1B56-S	$347	F2B	35	1.25	4.30	80.4	11.890	115/208-230	9
		1800	56	001180T1B56-S	$421	F2B	41	1.15	4.50	82.6	12.677	115/208-230	9
		1800	56	001180T1B056-S	$438	F2B	41	1.15	4.50	82.6	12.677	115/208-230	3;9
1.5	1.1	3600	56	001560S1BCD56-S	$311	C1S	40	1.00	8.70	68.0	11.496	115/208-230	1;4;6;9
		3600	56	001560T1B56-S	$393	F2B	38	1.15	6.20	81.5	12.284	115/208-230	9
		1800	56H	001580T1B56-S	$523	F2B	49	1.15	6.80	83.8	13.071	115/208-230	9
		1800	56H	001580T1B056-S	$541	F2B	50	1.15	6.80	83.8	13.465	115/208-230	3;9
2	1.5	3600	56H	002360S1BCD56-S	$372	C1S	34	1.00	8.90	70.0	11.890	115/208-230	1;4;6;9
		3600	56H	002360T1B56-S	$485	F2B	43	1.15	8.40	82.9	12.677	115/208-230	9
		1800	56H	002180T1B56-S	$626	F2B	54	1.15	9.30	84.5	13.465	115/208-230	9
3	2.2	3600	56H	003360S1CCD56-S	$432	C1S	41	1.00	12.7	80.0	12.677	208-230	1;4;6;9
		3600	56H	003360T1B56-S	$568	F2B	52	1.15	12.2	84.1	13.465	115/208-230	9
5	3.7	3600	56H	005360S1DCD56H-S	$458	C1S	53	1.00	20.3	80.0	13.465	230	1;4;6;9
		3600	56HZ	005360S1DCD56HZ-S	$481	C1S	53	1.00	20.3	80.0	13.533	230	1;4;5;6;9

Please refer to back cover for description of "NOTES"

For detailed specifications, data sheets, drawings and performance curves visit http://www.weg.net

ODP - Resilient Base

HP	kW	RPM	Frame	Catalog Number	List Price	Mult. Symbol	Approx. Shipping Weight (lbs)	Service Factor	FL Amps @ High	FL. Eff (%)	"C" Dimension (in)	Voltage (V)	Notes
0.16	0.12	1800	48Z	.16180S1ASPRB048Z-S	$272	F1B	21	1.35	3.00	50.5	10.138	115	3;9;13;16
		1800	48Z	.16180S1ASPRB48Z-S	$260	F1B	21	1.35	3.00	50.5	10.138	115	9;13;16
0.25	0.18	1800	48Z	.25180S1BSPRB048Z-S	$274	F1B	22	1.35	2.10	55.0	10.138	115/208-230	3;9;13;16
		1800	48Z	.25180S1ASPRB048Z-S	$274	F1B	22	1.35	4.30	55.0	10.138	115	3;9;13;16
		1800	48Z	.25180S1ASPRB48Z-S	$262	F1B	22	1.35	4.30	55.0	10.138	115	9;13;16
0.33	0.25	1800	48Z	.33180S1BSPRB048Z-S	$284	F1B	24	1.35	2.60	60.8	10.138	115/208-230	3;9;13;16
		1800	W56	.33180S1BSPRB0W56-S	$288	F1B	25	1.35	2.60	62.0	10.138	115/208-230	3;9;13;16
		1800	W56	.33180S1BSPRBW56-S	$276	F1B	25	1.35	2.60	62.0	10.138	115/208-230	9;13;16
		1800	48Z	.33180S1BSPRB48Z-S	$272	F1B	24	1.35	2.60	60.8	10.138	115/208-230	9;13;16
		1800	W56	.33180T1BRB0W56-S	$325	F2B	24	1.35	2.10	72.4	10.925	115/208-230	3;9;13
0.5	0.37	1800	48Z	.50180S1BSPRB048Z-S	$311	F1B	29	1.25	3.70	63.5	10.925	115/208-230	3;9;13;16
		1800	48Z	.50180S1BSPRB48Z-S	$299	F1B	29	1.25	3.70	63.5	10.925	115/208-230	9;13;16
		1800	W56	.50180S1BSPRB0W56-S	$316	F1B	30	1.25	3.70	63.5	10.945	115/208-230	3;9;13;16
		1800	W56	.50180S1BSPRBW56-S	$304	F1B	30	1.25	3.70	63.5	10.945	115/208-230	9;13;16
		1800	W56	.50180T1BRB0W56-S	$368	F2B	26	1.25	2.75	76.2	11.319	115/208-230	3;9;13
0.75	0.55	1800	56	.75180T1BRB056-S	$434	F2B	38	1.25	3.40	81.8	12.402	115/208-230	3;9;13
1	0.75	1800	56	00118OT1BRB056-S	$468	F2B	43	1.15	4.50	82.6	13.189	115/208-230	3;9;13
1.5	1.1	3600	56	00156OT1BRB056-S	$450	F2B	39	1.15	6.20	81.5	12.795	115/208-230	3;9;13
		1800	56H	00158OT1BRB056-S	$570	F2B	50	1.15	6.80	83.8	13.583	115/208-230	3;9;13
2	1.5	1800	56H	00218OT1BRB056H-S	$616	F2B	57	1.15	9.30	84.5	14.373	115/208-230	3;9;13

Please refer to back cover for description of "NOTES"

For detailed specifications, data sheets, drawings and performance curves visit http:// www.weg.net

Data subject to change without notice.

ODP - C-Face - Foot Mount

HP	kW	RPM	Frame	Catalog Number	List Price	Mult. Symbol	Approx. Shipping Weight (lbs)	Service Factor	FL Amps @ High	FL. Eff (%)	"C" Dimension (in)	Voltage (V)	Notes
0.12	0.09	1800	48CH	.12180S1B48CH-S	$222	F1B	18	1.40	1.40	50.0	9.098	115/208-230	9
0.16	0.12	3600	48CH	.16360S1B48CH-S	$237	F1B	21	1.35	1.40	53.0	9.098	115/208-230	9
		1800	48CH	.16180S1B48CH-S	$231	F1B	22	1.35	1.70	53.0	9.098	115/208-230	9
0.25	0.18	3600	48CH	.25360T1B48CH-S	$277	F2B	19	1.35	1.30	66.6	9.492	115/208-230	9
		3600	W56C	.25360T1BW56C-S	$281	F2B	19	1.35	1.30	66.6	9.866	115/208-230	9
		1800	48CH	.25180T1B48CH-S	$269	F2B	18	1.35	1.60	68.5	9.492	115/208-230	9
		1800	W56C	.25180T1BW56C-S	$269	F2B	19	1.35	1.60	68.5	9.866	115/208-230	9
0.33	0.25	3600	48CH	.33360T1B48CH-S	$282	F2B	23	1.35	1.60	70.5	9.886	115/208-230	9
		3600	W56C	.33360T1BW56C-S	$285	F2B	23	1.35	1.60	70.5	10.260	115/208-230	9
		1800	48CH	.33180T1B48CH-S	$299	F2B	20	1.35	2.10	72.4	9.886	115/208-230	9
		1800	W56C	.33180T1BW56C-S	$303	F2B	21	1.35	2.10	72.4	10.260	115/208-230	9
0.5	0.37	3600	48CH	.50360T1B48CH-S	$300	F2B	23	1.25	2.40	72.4	9.886	115/208-230	9
		3600	W56C	.50360T1BW56C-S	$310	F2B	24	1.25	2.40	72.4	10.260	115/208-230	9
		1800	W56C	.50180T1BOW56C-S	$352	F2B	24	1.25	2.80	76.2	10.654	115/208-230	3;9
		1800	W56C	.50180T1BW56C-S	$335	F2B	24	1.25	2.80	76.2	10.654	115/208-230	9
0.75	0.55	3600	56C	.75360T1B56C-S	$348	F2B	30	1.25	3.40	76.2	11.890	115/208-230	9
		1800	56C	.75180T1B56C-S	$415	F2B	38	1.25	3.40	81.8	11.890	115/208-230	9
1	0.75	3600	56C	001360T1B56C-S	$375	F2B	35	1.25	4.30	80.4	11.890	115/208-230	9
		1800	56C	001180T1B56C-S	$449	F2B	41	1.15	4.50	82.6	12.677	115/208-230	9
1.5	1.1	3600	56C	001560T1B56C-S	$421	F2B	38	1.15	6.20	81.5	12.284	115/208-230	9
		1800	56HC	001580T1B56C-S	$551	F2B	49	1.15	6.80	83.8	13.071	115/208-230	9
2	1.5	3600	56HC	002360T1B56C-S	$513	F2B	43	1.15	8.40	82.9	12.677	115/208-230	9
		1800	56HC	002180T1B56C-S	$654	F2B	54	1.15	9.30	84.5	13.465	115/208-230	9
3	2.2	3600	56HC	003360T1B56C-S	$596	F2B	52	1.15	12.2	84.1	13.465	115/208-230	9

Please refer to back cover for description of "NOTES"

For detailed specifications, data sheets, drawings and performance curves visit http://www.weg.net

Fractional Motors

SINGLE -PHASE

ODP - C-Face - Footless

HP	kW	RPM	Frame	Catalog Number	List Price	Mult. Symbol	Approx. Shipping Weight (lbs)	Service Factor	FL Amps @ High	FL. Eff (%)	"C" Dimension (in)	Voltage (V)	Notes
0.25	0.18	1800	W56C	.25180T1BW56CFL-S	$269	F2B	18	1.35	1.60	68.5	9.866	115/208-230	9;20
0.33	0.25	3600	W56C	.33360T1BW56CFL-S	$285	F2B	23	1.35	1.60	70.5	10.260	115/208-230	9;20
		3600	W56C	.33360T1BOW56CFL-S	$302	F2B	23	1.35	1.60	70.5	10.260	115/208-230	3;9;20
		1800	W56C	.33180T1BW56CFL-S	$303	F2B	20	1.35	2.10	72.4	10.260	115/208-230	9;20
0.5	0.37	3600	W56C	.50360T1BOW56CFL-S	$327	F2B	23	1.25	2.40	72.4	10.260	115/208-230	3;9;20
		3600	W56C	.50360T1BW56CFL-S	$310	F2B	23	1.25	2.40	72.4	10.260	115/208-230	9;20
		1800	W56C	.50180T1BW56CFL-S	$335	F2B	23	1.25	2.80	76.2	10.654	115/208-230	9;20
0.75	0.55	3600	56C	.75360T1BO56CFL-S	$365	F2B	29	1.25	3.40	76.2	11.890	115/208-230	3;9;20
		3600	56C	.75360T1B56CFL-S	$348	F2B	29	1.25	3.40	76.2	11.890	115/208-230	9;20
		1800	56C	.75180T1B56CFL-S	$415	F2B	38	1.25	3.40	81.8	11.890	115/208-230	9;20
1	0.75	3600	56C	001360T1B56CFL-S	$375	F2B	35	1.25	4.30	80.4	11.890	115/208-230	9;20
		3600	56C	001360T1BO56CFL-S	$392	F2B	35	1.25	4.30	80.4	11.890	115/208-230	3;9;20
		1800	56C	001180T1B56CFL-S	$449	F2B	41	1.15	4.50	82.6	12.677	115/208-230	9;20
1.5	1.1	3600	56C	001560T1B56CFL-S	$421	F2B	38	1.15	6.20	81.5	12.284	115/208-230	9;20
		3600	56C	001560T1BO56CFL-S	$438	F2B	38	1.15	6.20	81.5	12.284	115/208-230	3;9;20
		1800	56C	001580T1B56CFL-S	$551	F2B	48	1.15	6.80	83.8	13.071	115/208-230	9;20
2	1.5	3600	56C	002360T1B56CFL-S	$513	F2B	43	1.15	8.40	82.9	12.677	115/208-230	9;20
		3600	56C	002360T1BO56CFL-S	$530	F2B	43	1.15	8.40	82.9	12.677	115/208-230	3;9;20
		1800	56C	002180T1B56CFL-S	$654	F2B	54	1.15	9.30	84.5	13.465	115/208-230	9;20
3	2.2	3600	56C	003360T1BO56CFL-S	$613	F2B	51	1.15	12.2	84.1	13.465	115/208-230	3;9;20
		3600	56C	003360T1B56CFL-S	$596	F2B	51	1.15	12.2	84.1	13.465	115/208-230	9;20

ODP - Foot Mount - Thermally Protected

HP	kW	RPM	Frame	Catalog Number	List Price	Mult. Symbol	Approx. Shipping Weight (lbs)	Service Factor	FL Amps @ High	FL. Eff (%)	"C" Dimension (in)	Voltage (V)	Notes
0.5	0.37	3600	W56	.50360S1BCDW56-S	$224	C1S	28	1.00	3.10	63.0	9.866	115/208-230	1;4;6;9
0.75	0.55	3600	W56	.75360S1BCDW56-S	$237	C1S	22	1.00	4.30	68.5	10.260	115/208-230	1;4;6;9
1	0.75	3600	56	001360S1BCD56-S	$278	C1S	36	1.00	6.60	67.0	11.102	115/208-230	1;4;6;9
		1800	56	001180T1BO56-S	$438	F2B	41	1.15	4.50	82.6	12.677	115/208-230	3;9
1.5	1.1	3600	56	001560S1BCD56-S	$311	C1S	40	1.00	8.70	68.0	11.496	115/208-230	1;4;6;9
		1800	56H	001580T1BO56-S	$541	F2B	50	1.15	6.80	83.8	13.465	115/208-230	3;9
2	1.5	3600	56H	002360S1BCD56-S	$372	C1S	34	1.00	8.90	70.0	11.890	115/208-230	1;4;6;9
3	2.2	3600	56H	003360S1CCD56-S	$432	C1S	41	1.00	12.7	80.0	12.677	208-230	1;4;6;9
5	3.7	3600	56H	005360S1DCD56H-S	$458	C1S	53	1.00	20.3	80.0	13.465	230	1;4;6;9
		3600	56HZ	005360S1DCD56HZ-S	$481	C1S	53	1.00	20.3	80.0	13.533	230	1;4;5;6;9

Please refer to back cover for description of "NOTES"

For detailed specifications, data sheets, drawings and performance curves visit http:// www.weg.net

Data subject to change without notice.

TEFC - Foot Mount

HP	kW	RPM	Frame	Catalog Number	List Price	Mult. Symbol	Approx. Shipping Weight (lbs)	Service Factor	FL Amps @ High	FL. Eff (%)	"C" Dimension (in)	Voltage (V)	Notes
0.25	0.18	3600	56	.2536ES3E56-S	$237	F1	21	1.15	0.50	57.5	11.142	208-230/460	9
		1800	56	.2518ES3E56-S	$249	F1	23	1.15	0.50	70.0	11.142	208-230/460	9
0.33	0.25	3600	56	.3336ES3E56-S	$249	F1	22	1.15	0.60	62.0	11.142	208-230/460	9
		1800	56	.3318ES3E56-S	$253	F1	24	1.15	0.60	74.0	11.535	208-230/460	9
0.5	0.37	3600	56	.5036ES3E56-S	$258	F1	24	1.15	0.80	68.0	11.535	208-230/460	9
		1800	56	.5018ES3E56-S	$287	F1	26	1.15	0.90	77.0	11.535	208-230/460	9
		1800	56	.5018ES3H56-S	$288	F1	26	1.15	0.70	77.0	11.535	575	9
		1200	56	.5012ES3E56-S	$417	F1	31	1.15	1.00	72.0	12.323	208-230/460	9
0.75	0.55	3600	56	.7536ES3E56-S	$287	F1	25	1.15	1.10	72.0	11.535	208-230/460	9
		3600	56	.7536ES3H56-S	$288	F1	25	1.15	0.90	72.0	11.535	575	9
		1800	56	.7518ES3E56-S	$311	F1	28	1.15	1.20	78.5	11.929	208-230/460	9
		1200	56H	.7512ES3E56-S	$427	F1	34	1.15	1.30	75.5	12.716	208-230/460	9
1	0.75	3600	W56	00136ET3EW56-S	$392	F1	25	1.15	1.50	78.5	11.106	230/460	9
		3600	W56	00136ET3HW56-S	$392	F1	25	1.15	1.20	78.5	11.106	575	9
		1800	56	00118ET3E56-S	$379	F1	41	1.15	1.50	85.5	13.504	230/460	9
		1800	56	00118ET3H56-S	$379	F1	41	1.15	1.20	85.5	13.504	575	9
		1200	56H	00112ET3E56-S	$497	F1	42	1.15	1.60	82.5	13.504	230/460	9
1.5	1.1	3600	56	00156ET3E56-S	$433	F1	37	1.15	1.90	84.0	13.109	230/460	9
		1800	56H	00158ET3E56-S	$435	F1	44	1.15	2.00	86.5	13.504	230/460	9
2	1.5	3600	56H	00236ET3E56-S	$489	F1	44	1.15	2.50	85.5	13.898	230/460	9
		1800	56H	00218ET3E56-S	$478	F1	46	1.15	2.70	86.5	13.898	230/460	9
3	2.2	3600	56H	00336ET3E56-S	$578	F1	54	1.15	3.50	86.5	15.079	230/460	9

Please refer to back cover for description of "NOTES"

For detailed specifications, data sheets, drawings and performance curves visit http:// www.weg.net

THREE -PHASE

TEFC - C-Face - Foot Mount

HP	kW	RPM	Frame	Catalog Number	List Price	Mult. Symbol	Approx. Shipping Weight (lbs)	Service Factor	FL Amps @ High	FL. Eff (%)	"C" Dimension (in)	Voltage (V)	Notes
0.25	0.18	3600	56C	.2536ES3E56C-S	$258	F1	21	1.15	0.50	57.5	11.142	208-230/460	9
		1800	56C	.2518ES3E56C-S	$270	F1	23	1.15	0.50	70.0	11.142	208-230/460	9
		1800	56C	.2518ES3H56C-S	$270	F1	23	1.15	0.40	70.0	11.142	575	9
0.33	0.25	3600	56C	.3336ES3E56C-S	$270	F1	22	1.15	0.60	62.0	11.142	208-230/460	9
		3600	56C	.3336ES3H56C-S	$270	F1	22	1.15	0.50	62.0	11.142	575	9
		1800	56C	.3318ES3E56C-S	$274	F1	24	1.15	0.60	74.0	11.535	208-230/460	9
0.5	0.37	3600	56C	.5036ES3E56C-S	$282	F1	24	1.15	0.80	68.0	11.535	208-230/460	9
		3600	56C	.5036ES3H56C-S	$281	F1	24	1.15	0.70	68.0	11.535	575	9
		1800	56C	.5018ES3E56C-S	$311	F1	26	1.15	0.90	77.0	11.535	208-230/460	9
		1800	56C	.5018ES3H56C-S	$263	F1	26	1.15	0.70	77.0	11.535	575	9
		1200	56C	.5012ES3E56C-S	$440	F1	31	1.15	1.00	72.0	12.323	208-230/460	9
0.75	0.55	3600	56C	.7536ES3E56C-S	$311	F1	25	1.15	1.10	72.0	11.535	208-230/460	9
		3600	56C	.7536ES3H56C-S	$310	F1	25	1.15	0.90	72.0	11.535	575	9
		1800	56C	.7518ES3E56C-S	$332	F1	28	1.15	1.20	78.5	11.929	208-230/460	9
		1800	56C	.7518ES3H56C-S	$333	F1	28	1.15	1.00	78.5	11.929	575	9
		1200	56HC	.7512ES3E56C-S	$449	F1	34	1.15	1.30	75.5	12.716	208-230/460	9
1	0.75	3600	W56C	00136ET3EW56C-S	$420	F1	25	1.15	1.50	78.5	11.106	230/460	9
		3600	W56C	00136ET3HW56C-S	$420	F1	25	1.15	1.20	78.5	11.106	575	9
		1800	56C	00118ET3E56C-S	$407	F1	41	1.15	1.50	85.5	13.504	230/460	9
		1800	56C	00118ET3H56C-S	$407	F1	41	1.15	1.20	85.5	13.504	575	9
		1200	56HC	00112ET3E56C-S	$525	F1	42	1.15	1.60	82.5	13.504	230/460	9
1.5	1.1	3600	56C	00156ET3E56C-S	$461	F1	37	1.15	1.90	84.0	13.109	230/460	9
		3600	56C	00156ET3H56C-S	$461	F1	37	1.15	1.50	84.0	13.109	575	9
		1800	56HC	00158ET3E56C-S	$463	F1	44	1.15	2.00	86.5	13.504	230/460	9
		1800	56HC	00158ET3H56C-S	$463	F1	44	1.15	1.60	86.5	13.504	575	9
2	1.5	3600	56HC	00236ET3E56C-S	$517	F1	44	1.15	2.50	85.5	13.898	230/460	9
		3600	56HC	00236ET3H56C-S	$517	F1	44	1.15	2.00	85.5	13.898	575	9
		1800	56HC	00218ET3E56C-S	$506	F1	46	1.15	2.70	86.5	13.898	230/460	9
3	2.2	3600	56HC	00336ET3E56C-S	$606	F1	54	1.15	3.50	86.5	15.079	230/460	9
		3600	56HC	00336ET3H56C-S	$606	F1	54	1.15	2.80	86.5	15.079	575	9

Please refer to back cover for description of "NOTES"

For detailed specifications, data sheets, drawings and performance curves visit http:// www.weg.net

Data subject to change without notice.

TEFC - C-Face - Footless

HP	kW	RPM	Frame	Catalog Number	List Price	Mult. Symbol	Approx. Shipping Weight (lbs)	Service Factor	FL Amps @ High	FL. Eff (%)	"C" Dimension (in)	Voltage (V)	Notes
0.33	0.25	3600	56C	.3336ES3E56CFL-S	$270	F1	22	1.15	0.60	62.0	11.142	208-230/460	9;20
		3600	56C	.3336ES3H56CFL-S	$270	F1	22	1.15	0.50	62.0	11.142	575	9;20
		1800	56C	.3318ES3E56CFL-S	$274	F1	24	1.15	0.60	74.0	11.535	208-230/460	9;20
0.5	0.37	3600	56C	.5036ES3E56CFL-S	$282	F1	24	1.15	0.80	68.0	11.535	208-230/460	9;20
		1800	56C	.5018ES3E56CFL-S	$311	F1	26	1.15	0.90	77.0	11.535	208-230/460	9;20
		1800	56C	.5018ES3H56CFL-S	$281	F1	26	1.15	0.70	77.0	11.535	575	9;20
		1200	56C	.5012ES3E56CFL-S	$440	F1	31	1.15	1.00	72.0	12.323	208-230/460	9;20
		1200	56C	.5012ES3H56CFL-S	$441	F1	31	1.15	0.80	72.0	12.323	575	9;20
0.75	0.55	3600	56C	.7536ES3E56CFL-S	$311	F1	25	1.15	1.10	72.0	11.535	208-230/460	9;20
		3600	56C	.7536ES3H56CFL-S	$310	F1	25	1.15	0.90	72.0	11.535	575	9;20
		1800	56C	.7518ES3E56CFL-S	$332	F1	28	1.15	1.20	78.5	11.929	208-230/460	9;20
		1800	56C	.7518ES3H56CFL-S	$333	F1	28	1.15	1.00	78.5	11.929	575	9;20
		1200	56C	.7512ES3E56CFL-S	$449	F1	34	1.15	1.30	75.5	12.716	208-230/460	9;20
		1200	56C	.7512ES3H56CFL-S	$448	F1	34	1.15	1.10	75.5	12.716	575	9;20
1	0.75	3600	W56C	00136ET3EW56CFL-S	$420	F1	25	1.15	1.50	78.5	11.106	230/460	9;20
		1800	56C	00118ET3E56CFL-S	$407	F1	41	1.15	1.50	85.5	13.504	230/460	9;20
		1800	56C	00118ET3H56CFL-S	$407	F1	41	1.15	1.20	85.5	13.504	575	9;20
		1200	56C	00112ET3E56CFL-S	$528	F1	42	1.15	1.60	82.5	13.504	230/460	9;20
		1200	56C	00112ET3H56CFL-S	$528	F1	42	1.15	1.30	82.5	13.504	575	9;20
1.5	1.1	3600	56C	00156ET3E56CFL-S	$461	F1	37	1.15	1.90	84.0	13.109	230/460	9;20
		1800	56C	00158ET3E56CFL-S	$463	F1	44	1.15	2.00	86.5	13.504	230/460	9;20
2	1.5	3600	56C	00236ET3E56CFL-S	$517	F1	44	1.15	2.50	85.5	13.898	230/460	9;20
		1800	56C	00218ET3E56CFL-S	$506	F1	46	1.15	2.70	86.5	13.898	230/460	9;20
3	2.2	3600	56C	00336ET3E56CFL-S	$606	F1	54	1.15	3.50	86.5	15.079	230/460	9;20
		3600	56C	00336ET3H56CFL-S	$606	F1	54	1.15	2.80	86.5	15.079	575	9;20

Please refer to back cover for description of "NOTES"

For detailed specifications, data sheets, drawings and performance curves visit http:// www.weg.net

Fractional Motors

THREE -PHASE

ODP - Foot Mount

HP	kW	RPM	Frame	Catalog Number	List Price	Mult. Symbol	Approx. Shipping Weight (lbs)	Service Factor	FL Amps @ High	FL. Eff (%)	"C" Dimension (in)	Voltage (V)	Notes
0.25	0.18	3600	56	.25360T3E56-S	$231	F2B	19	1.35	0.46	65.6	10.315	230/460	9
		1800	48	.25180T3E48-S	$235	F2B	18	1.35	0.48	70.0	9.492	230/460	9
		1800	56	.25180T3E56-S	$235	F2B	19	1.35	0.53	69.5	9.921	230/460	9
		1200	56	.25120T3E56-S	$288	F2B	21	1.35	0.55	67.5	10.315	230/460	9
0.33	0.25	3600	56	.33360T3E56-S	$242	F2B	19	1.35	0.61	69.5	10.315	230/460	9
		1800	56	.33180T3E56-S	$256	F2B	20	1.35	0.67	73.4	10.315	230/460	9
		1800	56	.33180T3H56-S	$269	F2B	20	1.35	0.54	73.4	10.315	575	9
		1200	56	.33120T3E56-S	$333	F2B	22	1.35	0.70	71.4	10.315	230/460	9
0.5	0.37	3600	56	.50360T3E56-S	$258	F2B	20	1.25	0.81	73.4	10.315	230/460	9
		1800	56	.50180T3E56-S	$296	F2B	24	1.25	0.86	78.2	10.709	230/460	9
		1800	56	.50180T3H56-S	$311	F2B	24	1.25	0.69	78.2	10.709	575	9
		1200	56	.50120T3E56-S	$349	F2B	25	1.25	0.93	75.3	10.709	230/460	9
0.75	0.55	3600	56	.75360T3E56-S	$305	F2B	22	1.25	1.14	76.8	10.709	230/460	9
		1800	56	.75180T3E56-S	$330	F2B	27	1.25	1.15	81.1	11.102	230/460	9
		1800	56	.75180T3H56-S	$347	F2B	27	1.25	0.92	81.1	11.102	575	9
		1200	56H	.75120T3E56-S	$384	F2B	38	1.15	1.26	81.7	12.677	230/460	9
1	0.75	3600	56	001360T3E56-S	$355	F2B	23	1.25	1.51	77.0	10.709	230/460	9
		1800	56	001180T3E56-S	$350	F2B	30	1.15	1.57	83.5	11.495	230/460	9
		1200	56H	001120T3E56-S	$458	F2B	42	1.15	1.68	82.5	13.070	230/460	9
1.5	1.1	3600	56	001560T3E56-S	$380	F2B	30	1.15	1.85	84.0	11.889	230/460	9
		1800	56H	001580T3E56-S	$361	F2B	40	1.15	2.10	86.5	12.677	230/460	9
2	1.5	3600	56H	002360T3E56-S	$436	F2B	38	1.15	2.42	85.5	12.677	230/460	9
		1800	56H	002180T3E56-S	$371	F2B	40	1.15	2.69	86.5	12.677	230/460	9
3	2.2	3600	56H	003360T3E56-S	$485	F2B	42	1.15	3.59	85.5	13.070	230/460	9
		1800	56HZ	003180T3E56Z-S	$481	F2B	48	1.15	3.97	86.9	13.071	230/460	9

Please refer to back cover for description of "NOTES"

For detailed specifications, data sheets, drawings and performance curves visit http:// www.weg.net

Data subject to change without notice.

ODP - C-Face - Foot Mount

HP	kW	RPM	Frame	Catalog Number	List Price	Mult. Symbol	Approx. Shipping Weight (lbs)	Service Factor	FL Amps @ High	FL. Eff (%)	"C" Dimension (in)	Voltage (V)	Notes
0.25	0.18	3600	56C	.25360T3E56C-S	$259	F2B	19	1.35	0.46	65.6	10.315	230/460	9
		1800	56C	.25180T3E56C-S	$263	F2B	19	1.35	0.53	69.5	9.921	230/460	9
		1200	56C	.25120T3E56C-S	$316	F2B	21	1.35	0.55	67.5	10.315	230/460	9
0.33	0.25	3600	56C	.33360T3E56C-S	$270	F2B	19	1.35	0.61	69.5	10.315	230/460	9
		1800	56C	.33180T3E56C-S	$284	F2B	20	1.35	0.67	73.4	10.315	230/460	9
		1200	56C	.33120T3E56C-S	$361	F2B	22	1.35	0.70	71.4	10.315	230/460	9
0.5	0.37	3600	56C	.50360T3E56C-S	$286	F2B	20	1.25	0.81	73.4	10.315	230/460	9
		1800	56C	.50180T3E56C-S	$324	F2B	24	1.25	0.86	78.2	10.709	230/460	9
		1200	56C	.50120T3E56C-S	$377	F2B	25	1.25	0.93	75.3	10.709	230/460	9
0.75	0.55	3600	56C	.75360T3E56C-S	$333	F2B	22	1.25	1.14	76.8	10.709	230/460	9
		1800	56C	.75180T3E56C-S	$358	F2B	27	1.25	1.15	81.1	11.102	230/460	9
		1800	56C	.75180T3H56C-S	$358	F2B	27	1.25	0.92	81.1	11.102	575	9
		1200	56HC	.75120T3E56C-S	$412	F2B	38	1.15	1.26	81.7	12.677	230/460	9
1	0.75	3600	56C	001360T3E56C-S	$383	F2B	23	1.25	1.51	77.0	10.709	230/460	9
		1800	56C	001180T3E56C-S	$378	F2B	30	1.15	1.57	83.5	11.495	230/460	9
		1200	56HC	001120T3E56C-S	$486	F2B	42	1.15	1.68	82.5	13.070	230/460	9
1.5	1.1	3600	56C	001560T3E56C-S	$408	F2B	30	1.15	1.85	84.0	11.889	230/460	9
		1800	56HC	001580T3E56C-S	$389	F2B	40	1.15	2.10	86.5	12.677	230/460	9
2	1.5	3600	56HC	002360T3E56C-S	$464	F2B	38	1.15	2.42	85.5	12.677	230/460	9
		1800	56HC	002180T3E56C-S	$399	F2B	40	1.15	2.69	86.5	12.677	230/460	9
3	2.2	3600	56HC	003360T3E56C-S	$513	F2B	42	1.15	3.59	85.5	13.070	230/460	9

Please refer to back cover for description of "NOTES"

For detailed specifications, data sheets, drawings and performance curves visit http:// www.weg.net

ODP - C-Face - Footless

HP	kW	RPM	Frame	Catalog Number	List Price	Mult. Symbol	Approx. Shipping Weight (lbs)	Service Factor	FL Amps @ High	FL. Eff (%)	"C" Dimension (in)	Voltage (V)	Notes
0.25	0.18	1800	56C	.25180T3E56CFL-S	$263	F2B	19	1.35	0.53	66.0	9.921	230/460	9;20
		1800	56C	.25180T3H56CFL-S	$263	F2B	19	1.35	0.42	69.5	9.921	575	9;20
0.33	0.25	3600	56C	.33360T3E56CFL-S	$270	F2B	19	1.35	0.61	69.5	10.315	230/460	9;20
		1800	56C	.33180T3E56CFL-S	$284	F2B	20	1.35	0.67	73.4	10.315	230/460	9;20
		1800	56C	.33180T3H56CFL-S	$284	F2B	20	1.35	0.54	73.4	10.315	575	9;20
0.5	0.37	3600	56C	.50360T3E56CFL-S	$286	F2B	20	1.25	0.81	73.4	10.315	230/460	9;20
		1800	56C	.50180T3E56CFL-S	$324	F2B	24	1.25	0.86	78.2	10.709	230/460	9;20
		1800	56C	.50180T3H56CFL-S	$324	F2B	24	1.25	0.69	78.2	10.709	575	9;20
0.75	0.55	3600	56C	.75360T3E56CFL-S	$333	F2B	22	1.25	1.14	76.8	10.709	230/460	9;20
		1800	56C	.75180T3E56CFL-S	$358	F2B	27	1.25	1.15	81.1	11.102	230/460	9;20
		1800	56C	.75180T3H56CFL-S	$358	F2B	27	1.25	0.92	81.1	11.102	575	9;20
1	0.75	3600	56C	00136OT3E56CFL-S	$383	F2B	23	1.25	1.51	77.0	10.709	230/460	9;20
		1800	56C	00118OT3E56CFL-S	$378	F2B	30	1.15	1.57	83.5	11.495	230/460	9;20
		1800	56C	00118OT3H56CFL-S	$378	F2B	30	1.15	1.26	83.5	11.495	575	9;20
1.5	1.1	3600	56C	00156OT3E56CFL-S	$408	F2B	30	1.15	1.85	84.0	11.889	230/460	9;20
		1800	56C	00158OT3E56CFL-S	$389	F2B	40	1.15	2.10	86.5	12.677	230/460	9;20
		1800	56C	00158OT3H56CFL-S	$389	F2B	40	1.15	1.68	86.5	12.677	575	9;20
2	1.5	3600	56C	00236OT3E56CFL-S	$464	F2B	38	1.15	2.42	85.5	12.677	230/460	9;20
		1800	56C	00218OT3E56CFL-S	$399	F2B	40	1.15	2.69	86.5	12.677	230/460	9;20
		1800	56C	00218OT3H56CFL-S	$399	F2B	40	1.15	2.15	86.5	12.677	575	9;20
3	2.2	3600	56C	00336OT3E56CFL-S	$513	F2B	42	1.15	3.59	85.5	13.070	230/460	9;20

ODP - Three-Phase - Resilient Base

HP	kW	RPM	Frame	Catalog Number	List Price	Mult. Symbol	Approx. Shipping Weight (lbs)	Service Factor	FL Amps @ High	FL. Eff (%)	"C" Dimension (in)	Voltage (V)	Notes
0.33	0.25	1800	56	.33180T3ERB56-S	$314	F2B	22	1.35	0.67	73.4	10.827	230/460	9;13
0.5	0.37	1800	56	.50180T3ERB56-S	$354	F2B	25	1.25	0.86	78.2	11.220	230/460	9;13
0.75	0.55	1800	56	.75180T3ERB56-S	$388	F2B	28	1.25	1.15	81.1	11.614	230/460	9;13
1	0.75	1800	56	00118OT3ERB56-S	$408	F2B	31	1.15	1.57	83.5	12.008	230/460	9;13
1.5	1.1	1800	56H	00158OT3ERB56-S	$419	F2B	42	1.15	2.10	86.5	13.189	230/460	9;13

Please refer to back cover for description of "NOTES"

For detailed specifications, data sheets, drawings and performance curves visit http:// www.weg.net

Data subject to change without notice.

DC MOTORS

NEMA 56 PMDC Motors

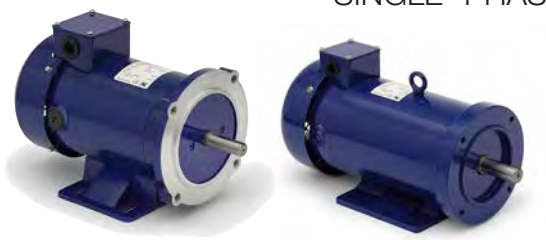

- UL recognized Also CE and RoHs listed.
- Replaceable brushes
- ¼ Hp thru ½ Hp ratings have a 4.45” frame/tube OD
- ¾ Hp and 1.0 Hp ratings have a 4.85” frame/tube OD.
- Optional Low Voltage (12V or 24V), or TENV Enclosed

Catalog Number	HP	Voltage	Current (Amp)	Speed (RPM)	INSUL Class	Torque (In/lbs)	L Max (inches)	List Price	Multiplier
MT-031	0.25	90	2.9	1750	F	9	9.63	**$516**	DC1
MT-041	0.25	180	1.39	1750	F	9	9.63	**$516**	DC1
MT-033	0.33	90	3.7	1750	F	12	9.63	**$563**	DC1
MT-042	0.33	180	1.85	1750	F	12	9.63	**$563**	DC1
MT-032	0.5	90	5.3	1750	F	18	10.24	**$644**	DC1
MT-043	0.5	180	2.78	1750	F	18	10.24	**$644**	DC1
MT-035	0.75	90	7.8	1750	F	27	11.67	**$791**	DC1
MT-044	0.75	180	3.9	1750	F	27	11.67	**$791**	DC1
MT-034	1	90	10.4	1750	F	36	13.05	**$930**	DC1
MT-037	1	180	5.2	1750	F	36	13.05	**$930**	DC1

NEMA 145TC PMDC Motors

- Optional 90V ratings for both 1.5 Hp and 2.0 Hp ratings

Catalog Number	HP	Voltage	Current (Amp)	Speed (RPM)	INSUL Class	Torque (In/lbs)	L Max (inches)	List Price	Multiplier
MT-038	1.5	180	8	1750	F	54	15.6	**$1,151**	DC1
MT-039	2	180	9.5	1750	F	72	16.5	**$2,093**	DC1
MT-040	3	180	14	1750	F	108	18.7	**$2,930**	DC1

NEMA 56 Dimensions

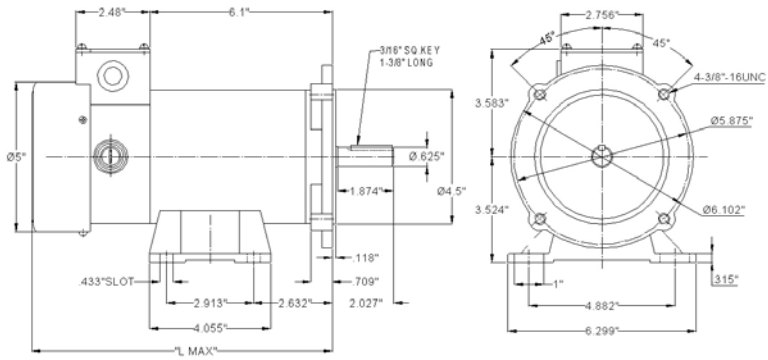

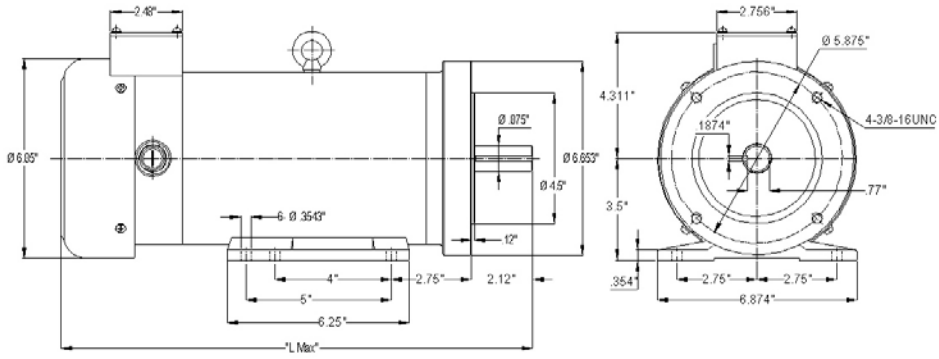

NEMA 145TC Dimensions

Pl ase refer to back cover for description of “NOTES”

For awings and performance curves visit http:// www.weg.net

Data subject to change without notice.

SINGLE -PHASE

Fractional Explosion Proof Motors

Features:

- Class F insulation
- 1.0 service factor
- Foot mount motors with and without C-flange
- Class I - Group C & D and Class II - Groups E, F & G – T3B
- Thermally Protected
- Long leads for remote wiring
- Aluminum endshields

Features that make a difference:

- 50°C ambient temperature rating
- Three-Phase motors also rated for 50Hz
- Unassembled aluminum conduit box included

Please contact your authorized WEG distributor or go to **weg.net/us** for further information or additional specifications. **1-800-ASK-4WEG**

www.weg.net/us

Please refer to back cover for description of "NOTES"

For detailed specifications, data sheets, drawings and performance curves visit http:// www.weg.net

Data subject to change without notice.

Foot Mount

HP	kW	RPM	Frame	Catalog Number	List Price	Mult. Symbol	Approx. Shipping Weight (lbs)	Service Factor	FL Amps @ High	FL. Eff (%)	"C" Dimension (in)	Voltage (V)	Notes
0.33	0.25	3600	56	**.3336XS1B56**	**$612**	XF	23	1.00	2.60	59.7	11.790	115/208-230	1;3;9;42
		1800	56	**.3318XS1B56**	**$670**	XF	25	1.00	3.00	60.4	11.790	115/208-230	1;3;9;42
0.5	0.37	3600	56	**.5036XS1B56**	**$636**	XF	26	1.00	3.40	66.7	12.040	115/208-230	1;3;9;42
		1800	56	**.5018XS1B56**	**$739**	XF	27	1.00	4.20	62.4	12.290	115/208-230	1;3;9;42
0.75	0.55	3600	56	**.7536XS1B56**	**$717**	XF	30	1.00	4.30	74.5	12.540	115/208-230	1;3;9;42
		1800	56	**.7518XS1B56**	**$868**	XF	34	1.00	4.52	70.8	13.040	115/208-230	1;3;9;42
1	0.75	3600	56	**00136XS1B56**	**$774**	XF	32	1.00	5.30	76.5	13.040	115/208-230	1;3;9;42
		1800	56	**00118XS1B56**	**$988**	XF	37	1.00	6.30	74.8	13.790	115/208-230	1;3;9;42
1.5	1.1	3600	56	**00156XS1C56**	**$1,121**	XF	38	1.00	7.80	80.0	14.040	208-230	1;3;9;42
		1800	56H	**00158XS1C56H**	**$1,324**	XF	48	1.00	7.80	80.0	15.420	208-230	1;3;9;42
2	1.5	3600	56H	**00236XS1C56H**	**$1,408**	XF	43	1.00	9.80	81.1	14.540	208-230	1;3;9;42

C-Face - Foot Mount

HP	kW	RPM	Frame	Catalog Number	List Price	Mult. Symbol	Approx. Shipping Weight (lbs)	Service Factor	FL Amps @ High	FL. Eff (%)	"C" Dimension (in)	Voltage (V)	Notes
0.33	0.25	3600	56C	**.3336XS1B56C**	**$737**	XF	23	1.00	2.60	59.7	11.790	115/208-230	1;3;9;42
		1800	56C	**.3318XS1B56C**	**$816**	XF	25	1.00	3.00	60.4	11.790	115/208-230	1;3;9;42
0.5	0.37	3600	56C	**.5036XS1B56C**	**$717**	XF	26	1.00	3.40	66.7	12.040	115/208-230	1;3;9;42
		1800	56C	**.5018XS1B56C**	**$817**	XF	27	1.00	4.20	62.4	12.290	115/208-230	1;3;9;42
0.75	0.55	3600	56C	**.7536XS1B56C**	**$773**	XF	30	1.00	4.30	74.5	12.540	115/208-230	1;3;9;42
		1800	56C	**.7518XS1B56C**	**$912**	XF	34	1.00	4.52	70.8	13.040	115/208-230	1;3;9;42
1	0.75	3600	56C	**00136XS1B56C**	**$814**	XF	32	1.00	5.30	76.5	13.040	115/208-230	1;3;9;42
		1800	56C	**00118XS1B56C**	**$1,036**	XF	37	1.00	6.30	74.8	13.790	115/208-230	1;3;9;42
1.5	1.1	3600	56C	**00156XS1C56C**	**$1,274**	XF	38	1.00	7.80	80.0	14.040	208-230	1;3;9;42
		1800	56HC	**00158XS1C56HC**	**$1,420**	XF	48	1.00	7.80	80.0	15.420	208-230	1;3;9;42
2	1.5	3600	56HC	**00236XS1C56HC**	**$1,457**	XF	43	1.00	9.80	81.1	14.540	208-230	1;3;9;42

Please refer to back cover for description of "NOTES"

For detailed specifications, data sheets, drawings and performance curves visit http://www.weg.net

Fractional Motors

EXPLOSION PROOF - THREE-PHASE

Foot Mount

HP	kW	RPM	Frame	Catalog Number	List Price	Mult. Symbol	Approx. Shipping Weight (lbs)	Service Factor	FL Amps @ High	FL. Eff (%)	"C" Dimension (in)	Voltage (V)	Notes
0.33	0.25	3600	56	.3336XS3E56	$650	XF	21	1.00	0.60	69.8	10.520	230/460	1;3;9;42
		1800	56	.3318XS3E56	$713	XF	23	1.00	0.60	76.7	10.520	230/460	1;3;9;17;42
0.5	0.37	3600	56	.5036XS3E56	$782	XF	24	1.00	0.90	73.1	11.790	230/460	1;3;9;42
		1800	56	.5018XS3E56	$741	XF	27	1.00	0.85	79.1	11.920	230/460	1;3;9;42
0.75	0.55	3600	56	.7536XS3E56	$815	XF	25	1.00	1.20	77.1	11.790	230/460	1;3;9;42
		1800	56	.7518XS3E56	$817	XF	28	1.00	1.40	78.6	12.290	230/460	1;3;9;42
1	0.75	3600	56	00136XT3E56	$858	XF	27	1.00	1.60	77.0	11.920	230/460	1;3;9;42
		1800	56	00118XT3E56	$922	XF	31	1.00	1.60	85.5	13.660	230/460	1;3;9;42
1.5	1.1	3600	56	00156XT3E56	$1,050	XF	30	1.00	2.10	84.0	12.780	230/460	1;3;9;42
		1800	56H	00158XT3E56H	$1,003	XF	41	1.00	2.10	86.5	14.540	230/460	1;3;9;42
2	1.5	3600	56H	00236XT3E56H	$1,171	XF	35	1.00	2.70	85.5	14.040	230/460	1;3;9;42
		1800	56H	00218XT3E56H	$1,090	XF	48	1.00	2.70	86.5	15.040	230/460	1;3;9;42

C-Face - Foot Mount

HP	kW	RPM	Frame	Catalog Number	List Price	Mult. Symbol	Approx. Shipping Weight (lbs)	Service Factor	FL Amps @ High	FL. Eff (%)	"C" Dimension (in)	Voltage (V)	Notes
0.33	0.25	3600	56C	.3336XS3E56C	$821	XF	21	1.00	0.60	69.8	10.520	208-230/460	1;3;9;42
		1800	56C	.3318XS3E56C	$877	XF	23	1.00	0.60	76.7	10.520	208-230/460	1;3;9;17;42
0.5	0.37	3600	56C	.5036XS3E56C	$856	XF	24	1.00	0.90	73.1	11.790	208-230/460	1;3;9;42
		1800	56C	.5018XS3E56C	$926	XF	27	1.00	0.85	79.1	11.920	208-230/460	1;3;9;42
0.75	0.55	3600	56C	.7536XS3E56C	$884	XF	25	1.00	1.20	77.1	11.790	208-230/460	1;3;9;42
		1800	56C	.7518XS3E56C	$944	XF	28	1.00	1.40	78.6	12.290	208-230/460	1;3;9;42
1	0.75	3600	56C	00136XT3E56C	$924	XF	27	1.00	1.60	77.0	11.920	230/460	1;3;9;42
		1800	56C	00118XT3E56C	$1,007	XF	31	1.00	1.60	82.2	13.660	230/460	1;3;9;42
1.5	1.1	3600	56C	00156XT3E56C	$1,038	XF	30	1.00	2.10	84.0	12.780	230/460	1;3;9;42
		1800	56HC	00158XT3E56HC	$1,011	XF	41	1.00	2.10	86.5	14.540	230/460	1;3;9;42
2	1.5	3600	56HC	00236XT3E56HC	$1,125	XF	35	1.00	2.70	85.5	14.040	230/460	1;3;9;42
		1800	56HC	00218XT3E56HC	$1,162	XF	48	1.00	2.70	86.5	15.040	230/460	1;3;9;42

Please refer to back cover for description of "NOTES"

For detailed specifications, data sheets, drawings and performance curves visit http:// www.weg.net

Data subject to change without notice.

COMMERCIAL HVAC MOTORS

TEFC – Single-Phase – Foot Mount A-163
TEAO – Single-Phase – Resilient Base A-163
TEAO – Single-Phase – Foot Mount A-163
ODP – Single-Phase – Foot Mount A-164
ODP – Single-Phase – Resilient Base A-165
ODP – Three-Phase – Resilient Base A-166
ODP – Single-Phase – Evaporative Cooler A-166

HVAC MOTORS - WITH INTERNAL AEGIS® SGR

TEFC – Three-Phase – Foot Mount and Foot Mount with C-Face A-167
ODP – Three-Phase – Foot Mount and Foot Mount with C-Face. A-171

COOLING TOWER MOTORS – THREE-PHASE

TEFC – Three-Phase – Foot Mount – NEMA Premium® A-175
TEAO – Three-Phase – Foot Mount – NEMA Premium® A-178
TEFC – Three-Phase – Double Speed (1 & 2 Windings) – High Efficiency A-180

PAD MOUNT MOTORS – Three-Phase

TEAO – NEMA Premium® A-184

Air Handling Motors

COMMERCIAL HVAC MOTORS

TEFC and ODP – Single Phase

High Starting Torque makes these motors ideal for a wide range of applications.

Standard Features:

- Ball bearings
- Class F insulation

TEFC

Resilient Base

ODP

Features that make a difference:

- High Starting Torque
- TEFC motors are rated IP55 (gasketed conduit box and capacitor cover)

AEGIS SGR BEARING PROTECTION RING
AEGIS INSTALLED
Patented Technology

TEFC and ODP – Three Phase

Features that make a difference:

- New ventilation system for improved thermal performance
- Robust feet design suitable for tougher applications
- New and more robust eyebolts design (frames 182/4T and up) plus a second eyebolt on non-drive end allowing vertical lifting capability (frames 213/5T and 254/6T)
- Oversized diagonally split aluminum terminal box that exceeds IP55 requirements
- Terminal box rotatable in 90 degrees increments for flexibility during installation
- Color coded leads as standard for easy wiring - (rolled steel only)
- Regreasable ball bearings on 254/6T frame as standard (optional for 182/4T and 213/5T)
- IP55 Ingress Protection as standard, being appropriate for severe environments - (TEFC only)
- Bearing cap as standard on flanged motors, optional on non flanged
- Suitable for VFD operation as per NEMA MG1 part 31.4.4.2
- Motor frame painting system 500 hours salt spray resistant

TEFC - Single-Phase - Foot Mount

HP	kW	RPM	Frame	Catalog Number	List Price	Mult. Symbol	Approx. Shipping Weight (lbs)	Service Factor	FL Amps @ High	FL. Eff (%)	"C" Dimension (in)	Voltage (V)	Notes
0.25	0.18	3600	W56	.2536ES1BW56-S	$257	F1	20	1.15	2.10	50.0	10.713	115/208-230	9
		1800	W56	.2518ES1BW56-S	$267	F1	20	1.15	2.30	57.0	11.106	115/208-230	9
0.33	0.25	3600	W56	.3336ES1BW56-S	$267	F1	23	1.15	2.60	54.0	11.106	115/208-230	9
		1800	W56	.3318ES1BW56-S	$283	F1	22	1.15	3.00	61.0	11.500	115/208-230	9
0.5	0.37	3600	W56	.5036ES1BW56-S	$284	F1	24	1.15	3.50	60.0	11.500	115/208-230	9
		3600	W56	.5036ES1BOLW56-S	$316	F1	24	1.15	3.50	60.0	11.500	115/208-230	4;9
		1800	W56	.5018ES1BW56-S	$312	F1	24	1.15	4.00	64.0	11.894	115/208-230	9
		1200	W56	.5012ES1B56-S	$512	F1	38	1.15	3.20	71.0	13.508	115/208-230	9
0.75	0.55	3600	56	.7536ES1BOL56-S	$329	F1	31	1.15	4.00	66.0	12.721	115/208-230	4;9
		3600	56	.7536ES1B56-S	$297	F1	31	1.15	4.00	66.0	12.721	115/208-230	9
		1800	56	.7518ES1B56-S	$348	F1	33	1.15	5.30	68.5	13.114	115/208-230	9
		1200	56H	.7512ES1B56-S	$648	F1	44	1.15	4.70	70.0	14.295	115/208-230	9
1	0.75	3600	56	00136ES1BOL56-S	$408	F1	35	1.15	5.10	70.0	13.114	115/208-230	4;9
		3600	56	00136ES1B56-S	$376	F1	34	1.15	5.10	70.0	13.114	115/208-230	9
		1800	56	00118ES1B56-S	$401	F1	39	1.15	6.80	71.0	13.902	115/208-230	9
1.5	1.1	3600	56	00156ES1B56-S	$432	F1	39	1.15	6.60	75.0	13.902	115/208-230	9
		3600	56	00156ES1BOL56-S	$463	F1	39	1.15	6.60	75.0	13.902	115/208-230	4;9
		1800	56H	00158ES1B56-S	$456	F1	40	1.15	7.50	77.0	15.083	115/208-230	9
2	1.5	3600	56H	00236ES1BOL56-S	$592	F1	44	1.15	8.70	77.0	14.295	115/208-230	4;9
		3600	56H	00236ES1B56-S	$561	F1	44	1.15	8.70	77.0	14.295	115/208-230	9

TEAO - Single-Phase - Resilient Base

HP	kW	RPM	Frame	Catalog Number	List Price	Mult. Symbol	Approx. Shipping Weight (lbs)	Service Factor	FL Amps @ High	FL. Eff (%)	"C" Dimension (in)	Voltage (V)	Notes
0.33	0.25	1800	48	.3318ES1BRBPFC48	$325	G1	27	1.25	3.00	64.0	11.339	115/208-230	3;9;13;16
0.5	0.37	1800	C56	.5018ES1BRBPFC56	$350	G1	29	1.25	4.20	65.0	11.732	115/208-230	3;9;13;16
0.75	0.55	1800	B56	.7518ES1BRBPFB56	$433	G1	35	1.25	5.60	70.0	11.811	115/208-230	3;9;13
1	0.75	1800	D56	00118ES1BRBPFD56	$469	G1	42	1.15	7.00	72.0	12.992	115/208-230	3;9;13

TEAO - Single-Phase - Foot Mount

HP	kW	RPM	Frame	Catalog Number	List Price	Mult. Symbol	Approx. Shipping Weight (lbs)	Service Factor	FL Amps @ High	FL. Eff (%)	"C" Dimension (in)	Voltage (V)	Notes
0.33	0.25	1800	48	.3318ES1BPFC48	$311	G1	23	1.25	3.00	64.0	10.748	115/208-230	3;9;16
0.5	0.37	1800	C56	.5018ES1BPFC56	$336	G1	26	1.25	4.20	65.0	11.102	115/208-230	3;9;16
0.75	0.55	1800	B56	.7518ES1BPFB56	$414	G1	31	1.25	5.60	70.0	11.102	115/208-230	3;9
1	0.75	1800	D56	00118ES1BPFD56	$449	G1	41	1.15	7.00	72.0	12.283	115/208-230	3;9

Please refer to back cover for description of "NOTES"

For detailed specifications, data sheets, drawings and performance curves visit http:// www.weg.net

ODP - Single-Phase - Foot Mount

HP	kW	RPM	Frame	Catalog Number	List Price	Mult. Symbol	Approx. Shipping Weight (lbs)	Service Factor	FL Amps @ High	FL. Eff (%)	"C" Dimension (in)	Voltage (V)	Notes
0.12	0.09	1800	48	.12180S1B48-S	$201	F1B	18	1.40	1.40	50.0	9.098	115/208-230	9
0.16	0.12	3600	48	.16360S1B48-S	$216	F1B	21	1.35	1.40	53.0	9.098	115/208-230	9
		1800	48	.16180S1B48-S	$208	F1B	22	1.35	1.70	53.0	9.098	115/208-230	9
0.25	0.18	3600	48	.25360T1B48-S	$253	F2B	19	1.35	1.30	66.6	9.492	115/208-230	9
		3600	W56	.25360T1BW56-S	$253	F2B	19	1.35	1.30	66.6	9.866	115/208-230	9
		1800	48	.25180T1B48-S	$241	F2B	18	1.35	1.60	68.5	9.492	115/208-230	9
		1800	W56	.25180T1BW56-S	$241	F2B	19	1.35	1.60	68.5	9.866	115/208-230	9
0.33	0.25	3600	48	.33360T1B48-S	$256	F2B	23	1.35	1.60	70.5	9.886	115/208-230	9
		3600	W56	.33360T1BW56-S	$257	F2B	23	1.35	1.60	70.5	10.260	115/208-230	9
		1800	48	.33180T1B48-S	$275	F2B	20	1.35	2.10	72.4	9.886	115/208-230	9
		1800	W56	.33180T1BW56-S	$275	F2B	21	1.35	2.10	72.4	10.260	115/208-230	9
0.5	0.37	3600	48	.50360T1B48-S	$276	F2B	23	1.25	2.40	72.4	9.886	115/208-230	9
		3600	W56	.50360T1BW56-S	$282	F2B	24	1.25	2.40	72.4	10.260	115/208-230	9
		1800	48	.50180T1B48-S	$318	F2B	23	1.25	2.80	76.2	10.280	115/208-230	9
		1800	W56	.50180T1BW56-S	$307	F2B	23	1.25	2.80	76.2	10.654	115/208-230	9
0.75	0.55	3600	56	.75360T1B56-S	$320	F2B	30	1.25	3.40	76.2	11.890	115/208-230	9
		1800	56	.75180T1B56-S	$387	F2B	38	1.25	3.40	81.8	11.890	115/208-230	9
1	0.75	3600	56	001360T1B56-S	$347	F2B	35	1.25	4.30	80.4	11.890	115/208-230	9
		1800	56	001180T1B56-S	$421	F2B	41	1.15	4.50	82.6	12.677	115/208-230	9
		1800	56	001180T1B056-S	$438	F2B	41	1.15	4.50	82.6	12.677	115/208-230	3;9
1.5	1.1	3600	56	001560T1B56-S	$393	F2B	38	1.15	6.20	81.5	12.284	115/208-230	9
		1800	56H	001580T1B56-S	$523	F2B	49	1.15	6.80	83.8	13.071	115/208-230	9
		1800	56H	001580T1B056-S	$541	F2B	50	1.15	6.80	83.8	13.465	115/208-230	3;9
2	1.5	3600	56H	002360T1B56-S	$485	F2B	43	1.15	8.40	82.9	12.677	115/208-230	9
		1800	56H	002180T1B56-S	$626	F2B	54	1.15	9.30	84.5	13.465	115/208-230	9
3	2.2	3600	56H	003360T1B56-S	$568	F2B	52	1.15	12.2	84.1	13.465	115/208-230	9

Please refer to back cover for description of "NOTES"

For detailed specifications, data sheets, drawings and performance curves visit http:// www.weg.net

Data subject to change without notice.

ODP - Single-Phase - Resilient Base

HP	kW	RPM	Frame	Catalog Number	List Price	Mult. Symbol	Approx. Shipping Weight (lbs)	Service Factor	FL Amps @ High	FL. Eff (%)	"C" Dimension (in)	Voltage (V)	Notes
0.16	0.12	1800	48Z	.16180S1ASPRB048Z-S	$272	F1B	21	1.35	3.00	50.5	10.138	115	3;9;13;16
		1800	48Z	.16180S1ASPRB48Z-S	$260	F1B	21	1.35	3.00	50.5	10.138	115	9;13;16
0.25	0.18	1800	48Z	.25180S1BSPRB048Z-S	$274	F1B	22	1.35	2.10	55.0	10.138	115/208-230	3;9;13;16
		1800	48Z	.25180S1ASPRB048Z-S	$274	F1B	22	1.35	4.30	55.0	10.138	115	3;9;13;16
		1800	48Z	.25180S1ASPRB48Z-S	$262	F1B	22	1.35	4.30	55.0	10.138	115	9;13;16
		1800	W56	.25180S1BRBFB0W56-S	$283	F1B	18	1.35	2.30	57.0	10.138	115/208-230	3;9;13;42
		1800	W56	.25180S1BRBFBW56-S	$271	F1B	18	1.35	2.30	57.0	10.138	115/208-230	9;13;42
0.33	0.25	1800	48Z	.33180S1BSPRB048Z-S	$284	F1B	24	1.35	2.60	60.8	10.138	115/208-230	3;9;13;16
		1800	48Z	.33180S1BSPRB48Z-S	$272	F1B	24	1.35	2.60	60.8	10.138	115/208-230	9;13;16
		1800	W56	.33180S1BSPRB0W56-S	$288	F1B	25	1.35	2.60	62.0	10.138	115/208-230	3;9;13;16
		1800	W56	.33180S1BSPRBW56-S	$276	F1B	25	1.35	2.60	62.0	10.138	115/208-230	9;13;16
		1800	W56	.33180S1BRBFBW56-S	$281	F1B	20	1.35	3.10	60.0	10.531	115/208-230	9;13;42
		1800	W56	.33180S1BRBFB0W56-S	$293	F1B	20	1.35	3.10	60.0	10.531	115/208-230	3;9;13;42
		1800	W56	.33180T1BRB0W56-S	$325	F2B	24	1.35	2.10	72.4	10.925	115/208-230	3;9;13
0.5	0.37	1800	48Z	.50180S1BSPRB048Z-S	$311	F1B	29	1.25	3.70	63.5	10.925	115/208-230	3;9;13;16
		1800	48Z	.50180S1BSPRB48Z-S	$299	F1B	29	1.25	3.70	63.5	10.925	115/208-230	9;13;16
		1800	W56	.50180S1BRBFB0W56-S	$325	F1B	21	1.25	4.10	63.0	10.925	115/208-230	3;9;13;42
		1800	W56	.50180S1BRBFBW56-S	$313	F1B	21	1.25	4.10	63.0	10.925	115/208-230	9;13;42
		1800	W56	.50180S1BSPRB0W56-S	$316	F1B	30	1.25	3.70	63.5	10.945	115/208-230	3;9;13;16
		1800	W56	.50180S1BSPRBW56-S	$304	F1B	30	1.25	3.70	63.5	10.945	115/208-230	9;13;16
		1800	W56	.50180T1BRB0W56-S	$368	F2B	26	1.25	2.75	76.2	11.319	115/208-230	3;9;13
0.75	0.55	1800	W56	.75180S1BRBFB0W56-S	$379	F1B	23	1.25	5.30	69.0	12.008	115/208-230	3;9;13;42
		1800	W56	.75180S1BRBFBW56-S	$367	F1B	23	1.25	5.30	69.0	12.008	115/208-230	9;13;42
		1800	56	.75180T1BRB056-S	$434	F2B	38	1.25	3.40	81.8	12.402	115/208-230	3;9;13
1	0.75	1800	W56	001180S1BRBFB0W56-S	$408	F1B	25	1.15	6.80	71.0	12.402	115/208-230	3;9;13;42
		1800	W56	001180S1BRBFBW56-S	$396	F1B	25	1.15	6.80	71.0	12.402	115/208-230	9;13;42
		1800	56	001180T1BRB056-S	$468	F2B	43	1.15	4.50	82.6	13.189	115/208-230	3;9;13
1.5	1.1	3600	56	001560T1BRB056-S	$450	F2B	39	1.15	6.20	81.5	12.795	115/208-230	3;9;13
		1800	56H	001580T1BRB056-S	$570	F2B	50	1.15	6.80	83.8	13.583	115/208-230	3;9;13
2	1.5	1800	56H	002180T1BRB056H-S	$616	F2B	57	1.15	9.30	84.5	14.373	115/208-230	3;9;13

Please refer to back cover for description of "NOTES"

For detailed specifications, data sheets, drawings and performance curves visit http:// www.weg.net

ODP - Three-Phase - Resilient Base

HP	kW	RPM	Frame	Catalog Number	List Price	Mult. Symbol	Approx. Shipping Weight (lbs)	Service Factor	FL Amps @ High	FL. Eff (%)	"C" Dimension (in)	Voltage (V)	Notes
0.33	0.25	1800	56	.33180T3ERB56-S	$314	F2B	22	1.35	0.67	73.4	10.827	230/460	9;13
0.5	0.37	1800	56	.50180T3ERB56-S	$354	F2B	25	1.25	0.86	78.2	11.220	230/460	9;13
0.75	0.55	1800	56	.75180T3ERB56-S	$388	F2B	28	1.25	1.15	81.1	11.614	230/460	9;13
1	0.75	1800	56	001180T3ERB56-S	$408	F2B	31	1.15	1.57	83.5	12.008	230/460	9;13
1.5	1.1	1800	56H	001580T3ERB56-S	$419	F2B	42	1.15	2.10	86.5	13.189	230/460	9;13

ODP - Single-Phase - Evaporative Cooler

HP	kW	RPM	Frame	Catalog Number	List Price	Mult. Symbol	Approx. Shipping Weight (lbs)	Service Factor	FL Amps @ High	FL. Eff (%)	"C" Dimension (in)	Voltage (V)	Notes
0.33	0.25	1800	56	.33180S1AEC56	$156	F1B	19	1.00	6.60	49.8	9.530	115	1;3;9;16
0.33/0.11	0.25/0.08	1800/1200	56	.33820S1AEC56	$188	F1B	21	1.00	6.60/3.70	49.8/33.6	9.530	115	1;3;9;16
0.5	0.37	1800	56	.50180S1AEC56	$164	F1B	21	1.00	8.20	58.0	9.530	115	1;3;9;16
		1800	56	.50180S1DEC56	$166	F1B	21	1.00	4.80	54.0	9.530	240	1;3;9;16
0.5/0.16	0.37/0.12	1800/1200	56	.50820S1AEC56	$199	F1B	24	1.00	8.20/4.60	58.0/42.4	9.530	115	1;3;9
		1800/1200	56	.50820S1DEC56	$220	F1B	24	1.00	4.80/2.10	54.0/39.6	9.530	240	1;3;9
0.75	0.55	1800	56	.75180S1AEC56	$201	F1B	24	1.00	10.40	61.9	9.530	115	1;3;9
		1800	56	.75180S1DEC56	$201	F1B	28	1.00	5.50	59.2	9.530	240	1;3;9
0.75/0.25	0.55/0.18	1800/1200	56	.75820S1AEC56	$251	F1B	26	1.00	10.4/5.50	61.9/42.8	9.530	115	1;3;9
		1800/1200	56	.75820S1DEC56	$267	F1B	27	1.00	5.50/2.60	59.0/47.4	9.530	240	1;3;9
1/0.33	0.75/0.25	1800/1200	56	001820S1AEC56	$364	F1B	32	1.00	12.1/7.10	65.1/49.1	10.960	115	1;3;9
		1800/1200	56	001820S1DEC56	$389	F1B	33	1.00	6.45/3.06	66.7/51.1	10.960	240	1;3;9

Please refer to back cover for description of "NOTES"

For detailed specifications, data sheets, drawings and performance curves visit http:// www.weg.net

Data subject to change without notice.

TEFC - Three-Phase - Foot Mount and Foot Mount with C-Face

HP	kW	RPM	Frame	Catalog Number	List Price	Mult. Symbol	Approx. Shipping Weight (lbs)	Service Factor	FL Amps @ High	FL. Eff (%)	"C" Dimension (in)	Voltage (V)	Notes
1	0.75	3600	143/5T	00136ET3E143T-SG	$560	RSP	31	1.15	1.40	78.5	13.189	230/460	9;34
		3600	143/5T	00136ET3H143T-SG	$560	RSP	31	1.15	1.10	78.5	13.189	575	9;34
		1800	143/5T	00118ET3E143T-SG	$599	RSP	42	1.15	1.50	85.5	13.583	230/460	9;34
		1800	143/5T	00118ET3H143T-SG	$599	RSP	42	1.15	1.20	85.5	13.583	575	9;34
		1800	143/5T	00118ET3V143T-SG	$599	RSP	42	1.15	1.70	85.5	13.583	200/400	9;34
		1200	143/5T	00112ET3E145T-SG	$669	RSP	43	1.15	1.60	82.5	13.583	230/460	9;34
		1200	143/5T	00112ET3H145T-SG	$669	RSP	43	1.15	1.30	82.5	13.583	575	9;34
1.5	1.1	3600	143/5T	00156ET3E143T-SG	$613	RSP	39	1.15	1.90	84.0	13.189	230/460	9;34
		3600	143/5T	00156ET3H143T-SG	$613	RSP	39	1.15	1.50	84.0	13.189	575	9;34
		1800	143/5T	00158ET3E145T-SG	$620	RSP	43	1.15	2.00	86.5	13.583	230/460	9;34
		1800	143/5T	00158ET3H145T-SG	$620	RSP	43	1.15	1.60	86.5	13.583	575	9;34
		1800	143/5T	00158ET3V145T-SG	$620	RSP	43	1.15	2.30	86.5	13.583	200/400	9;34
		1200	182/4T	00152ET3E182T-SG	$826	RSP	76	1.15	2.20	87.5	16.339	230/460	9;34
		1200	182/4T	00152ET3H182T-SG	$826	RSP	76	1.15	1.80	87.5	16.339	575	9;34
2	1.5	3600	143/5T	00236ET3E145T-SG	$654	RSP	45	1.15	2.50	85.5	13.976	230/460	9;34
		3600	143/5T	00236ET3H145T-SG	$654	RSP	45	1.15	2.00	85.5	13.976	575	9;34
		1800	143/5T	00218ET3E145T-SG	$673	RSP	47	1.15	2.70	86.5	13.976	230/460	9;34
		1800	143/5T	00218ET3H145T-SG	$673	RSP	47	1.15	2.20	86.5	13.976	575	9;34
		1800	143/5T	00218ET3V145T-SG	$673	RSP	47	1.15	3.10	86.5	13.976	200/400	9;34
		1200	182/4T	00212ET3E184T-SG	$883	RSP	86	1.15	3.00	88.5	17.126	230/460	9;34
		1200	182/4T	00212ET3H184T-SG	$883	RSP	86	1.15	2.40	88.5	17.126	575	9;34
3	2.2	3600	182/4T	00336ET3E182T-SG	$835	RSP	73	1.15	3.70	86.5	16.339	230/460	9;34
		3600	182/4T	00336ET3H182T-SG	$835	RSP	73	1.15	3.00	86.5	16.339	575	9;34
		1800	182/4T	00318ET3E182T-SG	$747	RSP	87	1.15	3.80	89.5	17.913	230/460	9;34
		1800	182/4TC	00318ET3E182TC-SG	$780	RSP	87	1.15	3.80	89.5	17.913	230/460	9;34
		1800	182/4T	00318ET3H182T-SG	$747	RSP	87	1.15	3.00	89.5	17.913	575	9;34
		1800	182/4T	00318ET3V182T-SG	$747	RSP	87	1.15	4.40	89.5	17.913	200/400	9;34
		1200	213/5T	00312ET3E213T-SG	$1,183	RSP	134	1.15	4.20	89.5	19.291	230/460	9;34
		1200	213/5T	00312ET3H213T-SG	$1,183	RSP	134	1.15	3.40	89.5	19.291	575	9;34
5	3.7	3600	182/4T	00536ET3E184T-SG	$930	RSP	85	1.15	5.90	88.5	17.913	230/460	9;34
		3600	182/4TC	00536ET3E184TC-SG	$963	RSP	98	1.15	5.90	88.5	17.913	230/460	9;34
		3600	182/4T	00536ET3H184T-SG	$930	RSP	85	1.15	4.70	88.5	17.913	575	9;34
		1800	182/4T	00518ET3E184T-SG	$842	RSP	81	1.15	6.50	89.5	17.913	230/460	9;34
		1800	182/4TC	00518ET3E184TC-SG	$876	RSP	81	1.15	6.50	89.5	17.913	230/460	9;34
		1800	182/4T	00518ET3H184T-SG	$842	RSP	81	1.15	5.20	89.5	17.913	575	9;34
		1800	182/4T	00518ET3V184T-SG	$842	RSP	81	1.15	7.50	89.5	17.913	200/400	9;34
		1200	213/5T	00512ET3E215T-SG	$1,360	RSP	153	1.15	6.70	89.5	20.079	230/460	9;34
		1200	213/5T	00512ET3H215T-SG	$1,360	RSP	153	1.15	5.40	89.5	20.079	575	9;34

continued on next page

Please refer to back cover for description of "NOTES"

For detailed specifications, data sheets, drawings and performance curves visit http://www.weg.net

TEFC - Three-Phase - Foot Mount and Foot Mount with C-Face - *continued*

HP	kW	RPM	Frame	Catalog Number	List Price	Mult. Symbol	Approx. Shipping Weight (lbs)	Service Factor	FL Amps @ High	FL. Eff (%)	"C" Dimension (in)	Voltage (V)	Notes
7.5	5.5	3600	213/5T	00736ET3E213T-SRG	$1,298	RSP	143	1.15	8.67	89.5	18.897	230/460	9;34
		3600	213/5T	00736ET3E213T-SG	$1,180	RSP	143	1.15	8.70	89.5	20.079	230/460	9;34
		3600	213/5TC	00736ET3E213TC-SG	$1,225	RSP	145	1.15	8.70	89.5	20.079	230/460	9;34
		3600	213/5T	00736ET3H213T-SG	$1,180	RSP	143	1.15	7.00	89.5	20.079	575	9;34
		1800	213/5T	00718ET3E213T-SG	$1,148	RSP	131	1.15	9.10	91.7	18.898	230/460	9;34
		1800	213/5TC	00718ET3E213TC-SG	$1,194	RSP	140	1.15	9.10	91.7	18.898	230/460	9;34
		1800	213/5T	00718ET3H213T-SG	$1,148	RSP	131	1.15	7.30	91.7	18.898	575	9;34
		1800	213/5T	00718ET3V213T-SG	$1,148	RSP	131	1.15	10.5	91.7	18.898	200/400	9;34
		1200	254/6T	00712ET3E254T-SG	$2,079	RSP	232	1.15	10.0	91.0	22.559	230/460	9;34
		1200	254/6T	00712ET3H254T-SG	$2,079	RSP	232	1.15	8.00	91.0	22.559	575	9;34
10	7.5	3600	213/5T	01036ET3E215T-SRG	$1,496	RSP	178	1.15	11.5	90.2	19.291	230/460	9;34
		3600	213/5T	01036ET3E215T-SG	$1,360	RSP	178	1.15	11.5	90.2	21.654	230/460	9;34
		3600	213/5TC	01036ET3E215TC-SG	$1,405	RSP	178	1.15	11.5	90.2	21.654	230/460	9;34
		3600	213/5T	01036ET3H215T-SG	$1,360	RSP	178	1.15	9.20	90.2	21.654	575	9;34
		1800	213/5T	01018ET3E215T-SG	$1,310	RSP	141	1.15	12.2	91.7	19.291	230/460	9;34
		1800	213/5TC	01018ET3E215TC-SG	$1,354	RSP	151	1.15	12.2	91.7	19.291	230/460	9;34
		1800	213/5T	01018ET3H215T-SG	$1,310	RSP	141	1.15	9.80	91.7	19.291	575	9;34
		1800	213/5T	01018ET3V215T-SG	$1,310	RSP	141	1.15	14.0	91.7	19.291	200/400	9;34
		1200	254/6T	01012ET3E256T-SG	$2,368	RSP	263	1.15	13.8	91.0	23.346	230/460	9;34
		1200	254/6T	01012ET3H256T-SG	$2,368	RSP	263	1.15	11.0	91.0	23.346	575	9;34
15	11	3600	254/6T	01536ET3E254T-SG	$1,869	RSP	216	1.15	17.4	91.0	22.559	230/460	9;34
		3600	254/6TC	01536ET3E254TC-SG	$1,929	RSP	216	1.15	17.4	91.0	22.559	230/460	9;34
		3600	254/6T	01536ET3H254T-SG	$1,869	RSP	216	1.15	13.9	91.0	22.559	575	9;34
		1800	254/6T	01518ET3E254T-SG	$1,890	RSP	234	1.15	18.2	92.4	22.559	230/460	9;34
		1800	254/6TC	01518ET3E254TC-SG	$1,950	RSP	248	1.15	18.2	92.4	22.559	230/460	9;34
		1800	254/6T	01518ET3H254T-SG	$1,890	RSP	234	1.15	14.6	92.4	22.559	575	9;34
		1800	254/6T	01518ET3V254T-SG	$1,890	RSP	234	1.15	20.9	92.4	22.559	200/400	9;34
		1200	284/6TS	01512ET3E284TS-W22G	$3,601	N1	360	1.25	17.9	91.7	26.557	230/460	34
		1200	284/6T	01512ET3E284T-W22G	$3,601	N1	422	1.25	17.9	91.7	27.929	230/460	34
		1200	284/6TS	01512ET3H284TS-W22G	$3,601	N1	360	1.25	14.3	91.7	26.557	575	34
20	15	3600	254/6T	02036ET3E256T-SG	$2,356	RSP	242	1.15	22.7	91.0	23.346	230/460	9;34
		3600	254/6TC	02036ET3E256TC-SG	$2,416	RSP	245	1.15	22.7	91.0	23.346	230/460	9;34
		3600	254/6T	02036ET3H256T-SG	$2,356	RSP	242	1.15	18.2	91.0	23.346	575	9;34
		1800	254/6T	02018ET3E256T-SG	$2,198	RSP	265	1.15	24.7	92.4	23.346	230/460	9;34
		1800	254/6TC	02018ET3E256TC-SG	$2,258	RSP	279	1.15	24.7	93.0	23.346	230/460	9;34
		1800	254/6T	02018ET3H256T-SG	$2,198	RSP	265	1.15	19.8	93.0	23.346	575	9;34
		1800	254/6T	02018ET3V256T-SG	$2,198	RSP	265	1.15	28.4	93.0	23.346	200/400	9;34
		1200	284/6T	02012ET3E286T-W22G	$4,272	N1	449	1.25	24.2	91.7	27.929	230/460	34
		1200	284/6T	02012ET3H286T-W22G	$4,272	N1	450	1.25	19.4	91.7	27.929	575	34
25	18.5	3600	284/6TS	02536ET3E284TS-W22G	$3,308	N1	406	1.25	28.5	91.7	26.557	230/460	34
		3600	284/6TS	02536ET3H284TS-W22G	$3,308	N1	400	1.25	22.8	91.7	26.557	575	34
		1800	284/6T	02518ET3E284T-W22G	$3,053	N1	440	1.25	29.5	93.6	27.929	230/460	34
		1800	284/6T	02518ET3H284T-W22G	$3,053	N1	439	1.25	23.6	93.6	27.929	575	34
		1800	284/6T	02518ET3V284T-W22G	$3,053	N1	440	1.25	33.9	93.6	27.929	200/400	34
		1200	324/6T	02512ET3E324T-W22G	$5,137	N1	585	1.25	30.4	93.0	31.116	230/460	34
		1200	324/6T	02512ET3H324T-W22G	$5,137	N1	569	1.25	24.3	93.0	31.116	575	34

continued on next page

Please refer to back cover for description of "NOTES"

For detailed specifications, data sheets, drawings and performance curves visit http:// www.weg.net

Data subject to change without notice.

TEFC - Three-Phase - Foot Mount and Foot Mount with C-Face - *continued*

HP	kW	RPM	Frame	Catalog Number	List Price	Mult. Symbol	Approx. Shipping Weight (lbs)	Service Factor	FL Amps @ High	FL. Eff (%)	"C" Dimension (in)	Voltage (V)	Notes
30	22	3600	284/6TS	03036ET3E286TS-W22G	$3,871	N1	425	1.25	33.8	91.7	26.557	230/460	34
		3600	284/6TS	03036ET3H286TS-W22G	$3,871	N1	430	1.25	27.0	91.7	26.557	575	34
		1800	284/6T	03018ET3E286T-W22G	$3,533	N1	478	1.25	35.1	93.6	27.929	230/460	34
		1800	284/6TC	03018ET3E286TC-W22G	$3,632	N1	486	1.25	35.1	93.6	27.929	230/460	34
		1800	284/6T	03018ET3H286T-W22G	$3,533	N1	476	1.25	28.1	93.6	27.929	575	34
		1800	284/6T	03018ET3V286T-W22G	$3,533	N1	479	1.25	40.4	93.6	27.929	200/400	34
		1200	324/6T	03012ET3E326T-W22G	$5,673	N1	629	1.25	36.2	93.0	31.116	230/460	34
		1200	324/6TC	03012ET3E326TC-W22G	$5,794	N1	621	1.25	36.2	93.0	31.116	230/460	34
		1200	324/6T	03012ET3H326T-W22G	$5,673	N1	621	1.25	29.0	93.0	31.116	575	34
40	30	3600	324/6TS	04036ET3E324TS-W22G	$5,125	N1	590	1.25	45.8	92.4	29.616	230/460	34
		3600	324/6TS	04036ET3H324TS-W22G	$5,125	N1	572	1.25	36.6	92.4	29.616	575	34
		1800	324/6T	04018ET3E324T-W22G	$4,578	N1	615	1.25	47.1	94.1	31.116	230/460	34
		1800	324/6T	04018ET3H324T-W22G	$4,578	N1	614	1.25	37.7	94.1	31.116	575	34
		1800	324/6T	04018ET3V324T-W22G	$4,578	N1	616	1.25	54.2	94.1	31.116	200/400	34
		1200	364/5T	04012ET3E364T-W22G	$8,124	N1	1004	1.25	46.5	94.1	34.251	230/460	34
		1200	364/5T	04012ET3H364T-W22G	$8,124	N1	950	1.25	37.2	94.1	34.251	575	34
50	37	3600	324/6TS	05036ET3E326TS-W22G	$5,716	N1	612	1.25	56.1	93.0	29.616	230/460	34
		3600	324/6TS	05036ET3H326TS-W22G	$5,716	N1	605	1.25	44.9	93.0	29.616	575	34
		1800	324/6T	05018ET3E326T-W22G	$5,500	N1	638	1.25	59.2	94.5	31.116	230/460	34
		1800	324/6T	05018ET3H326T-W22G	$5,500	N1	634	1.25	47.4	94.5	31.116	575	34
		1800	324/6T	05018ET3V326T-W22G	$5,500	N1	637	1.25	68.1	94.5	31.116	200/400	34
		1200	364/5T	05012ET3E365T-W22G	$9,358	N1	1021	1.25	57.4	94.1	34.251	230/460	34
		1200	364/5T	05012ET3H365T-W22G	$9,358	N1	1009	1.25	45.9	94.1	34.251	575	34
60	45	3600	364/5TS	06036ET3E364TS-W22G	$8,392	N1	962	1.25	67.0	93.6	32.338	230/460	34
		3600	364/5TS	06036ET3H364TS-W22G	$8,392	N1	954	1.25	53.6	93.6	32.338	575	34
		1800	364/5T	06018ET3E364T-W22G	$8,229	N1	1029	1.25	68.3	95.0	34.251	230/460	34
		1800	364/5T	06018ET3H364T-W22G	$8,229	N1	1027	1.25	54.6	95.0	34.251	575	34
		1200	404/5T	06012ET3E404T-W22G	$11,697	N1	1213	1.25	69.5	94.5	39.730	230/460	34
		1200	404/5T	06012ET3H404T-W22G	$11,697	N1	1213	1.25	55.6	94.5	39.730	575	34
75	55	3600	364/5TS	07536ET3E365TS-W22G	$9,931	N1	965	1.25	81.9	93.6	32.338	230/460	34
		3600	364/5TS	07536ET3H365TS-W22G	$9,931	N1	967	1.25	65.5	93.6	32.338	575	34
		1800	364/5T	07518ET3E365T-W22G	$9,545	N1	1046	1.25	84.1	95.4	34.251	230/460	34
		1800	364/5TC	07518ET3E365TC-W22G	$9,988	N1	1041	1.25	84.1	95.4	34.251	230/460	34
		1800	364/5T	07518ET3H365T-W22G	$9,545	N1	1044	1.25	67.3	95.4	34.251	575	34
		1200	404/5T	07512ET3E405T-W22G	$13,258	N1	882	1.25	84.9	94.5	39.730	230/460	34
		1200	404/5T	07512ET3H405T-W22G	$13,258	N1	882	1.25	67.9	94.5	39.730	575	34
100	75	3600	404/5TS	10036ET3E405TS-W22G	$13,202	N1	1193	1.25	110	94.1	36.732	230/460	34
		1800	404/5T	10018ET3E405T-W22G	$12,889	N1	1283	1.25	111	95.4	39.730	230/460	34
		1800	404/5T	10018ET3H405T-W22G	$12,889	N1	1292	1.25	88.8	95.4	39.730	575	34
		1200	444/5T	10012ET3E444T-W22G	$17,181	N1	1885	1.25	121	95.0	45.157	230/460	34
		1200	444/5T	10012ET3H444T-W22G	$17,181	N1	1885	1.25	96.8	95.0	45.157	575	34

continued on next page

Please refer to back cover for description of "NOTES"

For detailed specifications, data sheets, drawings and performance curves visit http://www.weg.net

TEFC - Three-Phase - Foot Mount and Foot Mount with C-Face - *continued*

HP	kW	RPM	Frame	Catalog Number	List Price	Mult. Symbol	Approx. Shipping Weight (lbs)	Service Factor	FL Amps @ High	FL. Eff (%)	"C" Dimension (in)	Voltage (V)	Notes
125	90	3600	444/5TS	12536ET3E444TS-W22G	$16,900	N1	1836	1.15	134	95.0	41.407	230/460	34
		3600	444/5TS	12536ET3H444TS-W22G	$16,900	N1	1836	1.15	107	95.0	41.407	575	34
		1800	444/5T	12518ET3E444T-W22G	$16,298	N1	1824	1.15	139	95.4	45.157	230/460	34
		1800	444/5TC	12518ET3E444TC-W22G	$16,904	N1	1861	1.15	139	95.4	45.157	230/460	34
		1800	444/5T	12518ET3H444T-W22G	$16,298	N1	1824	1.15	111	95.4	45.157	575	34
		1800	444/5TC	12518ET3G444TC-W22G	$17,768	N1	1754	1.15	139	95.4	45.157	460	34
		1200	444/5T	12512ET3E445T-W22G	$19,497	N1	2004	1.15	143	95.0	45.157	230/460	34
		1200	444/5T	12512ET3H445T-W22G	$19,497	N1	2004	1.15	114	95.0	45.157	575	34
150	110	1800	444/5TC	15018ET3E445TC-W22G	$19,575	N1	1960	1.15	170	95.8	45.157	230/460	34
		1800	444/5TC	15018ET3G445TC-W22G	19575	N1	1960	1.15	170	95.8	45.157	460	34

Please refer to back cover for description of "NOTES"

For detailed specifications, data sheets, drawings and performance curves visit http:// www.weg.net

Data subject to change without notice.

ODP - Three-Phase - Foot Mount and Foot Mount with C-Face

HP	kW	RPM	Frame	Catalog Number	List Price	Mult. Symbol	Approx. Shipping Weight (lbs)	Service Factor	FL Amps @ High	FL. Eff (%)	"C" Dimension (in)	Voltage (V)	Notes
1	0.75	1800	143/5T	00118OT3E143T-SG	$530	N1S	38	1.15	1.50	85.5	11.181	230/460	9;34
		1800	143/5TC	00118OT3E143TC-SG	$564	N1S	38	1.15	1.50	85.5	11.181	230/460	9;34
		1800	143/5T	00118OT3H143T-SG	$530	N1S	38	1.15	1.20	85.5	11.181	575	9;34
		1800	143/5T	00118OT3V143T-SG	$530	N1S	38	1.15	1.70	85.5	11.181	200/400	9;34
		1200	143/5T	00112OT3E145T-SG	$586	N1S	38	1.15	1.70	82.5	11.181	230/460	9;34
		1200	143/5T	00112OT3H145T-SG	$586	N1S	38	1.15	1.30	82.5	11.181	575	9;34
1.5	1.1	3600	143/5T	00156OT3E143T-SG	$582	N1S	33	1.15	1.90	84.0	11.181	230/460	9;34
		1800	143/5T	00158OT3E145T-SG	$589	N1S	45	1.15	2.10	86.5	12.362	230/460	9;34
		1800	143/5TC	00158OT3E145TC-SG	$623	N1S	45	1.15	2.10	86.5	12.362	230/460	9;34
		1800	143/5T	00158OT3H145T-SG	$589	N1S	45	1.15	1.70	86.5	12.362	575	9;34
		1800	143/5T	00158OT3V145T-SG	$589	N1S	45	1.15	2.40	86.5	12.362	200/400	9;34
		1800	143/5TC	00158OT3V145TC-SG	$623	N1S	45	1.15	2.40	86.5	12.362	200/400	9;34
		1200	182/4T	00152OT3E182T-SG	$758	N1S	63	1.15	2.30	86.5	13.976	230/460	9;34
2	1.5	3600	143/5T	00236OT3E145T-SG	$627	N1S	40	1.15	2.40	85.5	11.969	230/460	9;34
		1800	143/5T	00218OT3E145T-SG	$632	N1S	43	1.15	2.70	86.5	12.362	230/460	9;34
		1800	143/5TC	00218OT3E145TC-SG	$666	N1S	43	1.15	2.70	86.5	12.362	230/460	9;34
		1800	143/5T	00218OT3H145T-SG	$632	N1S	43	1.15	2.20	86.5	12.362	575	9;34
		1800	143/5T	00218OT3V145T-SG	$632	N1S	43	1.15	3.10	86.5	12.362	200/400	9;34
		1200	182/4T	00212OT3E184T-SG	$767	N1S	73	1.15	3.00	87.5	14.764	230/460	9;34
3	2.2	3600	143/5T	00336OT3E145T-SG	$685	N1S	44	1.15	3.60	85.5	12.362	230/460	9;34
		1800	182/4T	00318OT3E182T-SG	$694	N1S	73	1.15	3.90	89.5	15.157	230/460	9;34
		1800	182/4TC	00318OT3E182TC-SG	$732	N1S	73	1.15	3.90	89.5	15.157	230/460	9;34
		1800	182/4T	00318OT3H182T-SG	$694	N1S	73	1.15	3.10	89.5	15.157	575	9;34
		1800	182/4T	00318OT3V182T-SG	$694	N1S	73	1.15	4.40	89.5	15.157	200/400	9;34
		1800	182/4TC	00318OT3V182TC-SG	$732	N1S	73	1.15	4.40	89.5	15.157	200/400	9;34
		1200	213/5T	00312OT3E213T-SG	$975	N1S	113	1.15	4.20	88.5	16.575	230/460	9;34
		1200	213/5T	00312OT3H213T-SG	$975	N1S	113	1.15	3.30	88.5	16.575	575	9;34
5	3.7	3600	182/4T	00536OT3E182T-SG	$821	N1S	61	1.15	6.10	86.5	14.764	230/460	9;34
		3600	182/4TC	00536OT3E182TC-SG	$859	N1S	61	1.15	6.10	86.5	14.764	230/460	9;34
		1800	182/4T	00518OT3E184T-SG	$800	N1S	88	1.15	6.30	89.5	16.339	230/460	9;34
		1800	182/4TC	00518OT3E184TC-SG	$838	N1S	88	1.15	6.30	89.5	16.339	230/460	9;34
		1800	182/4T	00518OT3H184T-SG	$800	N1S	88	1.15	5.10	89.5	16.339	575	9;34
		1800	182/4T	00518OT3V184T-SG	$800	N1S	88	1.15	7.30	89.5	16.339	200/400	9;34
		1800	182/4TC	00518OT3V184TC-SG	$838	N1S	88	1.15	7.30	89.5	16.339	200/400	9;34
		1200	213/5T	00512OT3E215T-SG	$1,257	N1S	135	1.15	6.70	89.5	16.969	230/460	9;34

continued next page

Please refer to back cover for description of "NOTES"

For detailed specifications, data sheets, drawings and performance curves visit http://www.weg.net

HVAC MOTORS - WITH INTERNAL AEGIS® SGR

ODP - Three-Phase - Foot Mount and Foot Mount with C-Face - *continued*

HP	kW	RPM	Frame	Catalog Number	List Price	Mult. Symbol	Approx. Shipping Weight (lbs)	Service Factor	FL Amps @ High	FL. Eff (%)	"C" Dimension (in)	Voltage (V)	Notes
7.5	5.5	3600	182/4T	00736OT3E184T-SG	$1,090	N1S	76	1.15	8.70	88.5	15.157	230/460	9;34
		3600	182/4TC	00736OT3E184TC-SG	$1,128	N1S	76	1.15	8.70	88.5	15.157	230/460	9;34
		1800	213/5T	00718OT3E213T-SG	$1,110	N1S	125	1.15	9.30	91.0	16.575	230/460	9;34
		1800	213/5TC	00718OT3E213TC-SG	$1,161	N1S	125	1.15	9.30	91.0	16.575	230/460	9;34
		1800	213/5T	00718OT3H213T-SG	$1,110	N1S	125	1.15	7.40	91.0	16.575	575	9;34
		1800	213/5T	00718OT3V213T-SG	$1,110	N1S	125	1.15	10.6	91.0	16.575	200/400	9;34
		1800	213/5TC	00718OT3V213TC-SG	$1,161	N1S	125	1.15	10.6	91.0	16.575	200/400	9;34
		1200	254/6T	00712OT3E254T-SG	$1,747	N1S	209	1.15	10.2	90.2	20.472	230/460	9;34
		1200	254/6TC	00712OT3E254TC-SG	$1,815	N1S	209	1.15	10.2	90.2	20.472	230/460	9;34
		1200	254/6T	00712OT3H254T-SG	$1,747	N1S	209	1.15	8.20	90.2	20.472	575	9;34
10	7.5	3600	213/5T	01036OT3E213T-SG	$1,281	N1S	126	1.15	12.0	89.5	16.969	230/460	9;34
		3600	213/5TC	01036OT3E213TC-SG	$1,332	N1S	126	1.15	12.0	89.5	16.969	230/460	9;34
		1800	213/5T	01018OT3E215T-SG	$1,302	N1S	130	1.15	12.4	91.7	16.575	230/460	9;34
		1800	213/5TC	01018OT3E215TC-SG	$1,353	N1S	130	1.15	12.4	91.7	16.575	230/460	9;34
		1800	213/5T	01018OT3H215T-SG	$1,302	N1S	130	1.15	9.90	91.7	16.575	575	9;34
		1800	213/5T	01018OT3V215T-SG	$1,302	N1S	130	1.15	14.3	91.7	16.575	200/400	9;34
		1800	213/5TC	01018OT3V215TC-SG	$1,353	N1S	130	1.15	14.3	91.7	16.575	200/400	9;34
		1200	254/6T	01012OT3E256T-SG	$1,997	N1S	237	1.15	13.9	91.7	20.472	230/460	9;34
		1200	254/6T	01012OT3H256T-SG	$1,997	N1S	237	1.15	11.1	91.7	20.472	575	9;34
15	11	3600	213/5T	01536OT3E215T-SG	$1,692	N1S	141	1.15	17.2	90.2	17.756	230/460	9;34
		3600	213/5TC	01536OT3E215TC-SG	$1,743	N1S	141	1.15	17.2	90.2	17.756	230/460	9;34
		1800	254/6T	01518OT3E254T-SG	$1,757	N1S	211	1.15	18.6	93.0	20.472	230/460	9;34
		1800	254/6TC	01518OT3E254TC-SG	$1,825	N1S	211	1.15	18.6	93.0	20.472	230/460	9;34
		1800	254/6T	01518OT3H254T-SG	$1,757	N1S	211	1.15	14.9	93.0	20.472	575	9;34
		1800	254/6T	01518OT3V254T-SG	$1,757	N1S	211	1.15	21.4	93.0	20.472	200/400	9;34
		1200	284T	01512OT3E284T-G	$2,722	N1B	368	1.15	17.7	91.7	23.386	230/460	34
20	15	3600	254/6T	02036OT3E254T-SG	$2,040	N1S	187	1.15	23.8	91.0	20.472	230/460	9;34
		3600	254/6TC	02036OT3E254TC-SG	$2,108	N1S	187	1.15	23.8	91.0	20.472	230/460	9;34
		1800	254/6T	02018OT3E256T-SG	$2,112	N1S	235	1.15	25.0	93.0	20.472	230/460	9;34
		1800	254/6TC	02018OT3E256TC-SG	$2,180	N1S	235	1.15	25.0	93.0	20.472	230/460	9;34
		1800	254/6T	02018OT3H256T-SG	$2,112	N1S	235	1.15	20.0	93.0	20.472	575	9;34
		1800	254/6T	02018OT3V256T-SG	$2,112	N1S	235	1.15	28.8	93.0	20.472	200/400	9;34
		1800	254/6TC	02018OT3V256TC-SG	$2,180	N1S	235	1.15	28.8	93.0	20.472	200/400	9;34
		1200	286T	02012OT3E286T-G	$3,344	N1B	417	1.15	24.0	92.4	24.882	230/460	34
25	18.5	3600	254/6T	02536OT3E256T-SG	$2,419	N1S	202	1.15	29.1	91.7	20.472	230/460	9;34
		3600	254/6TC	02536OT3E256TC-SG	$2,487	N1S	202	1.15	29.1	91.7	20.472	230/460	9;34
		1800	284T	02518OT3E284T-G	$2,470	N1B	381	1.15	29.9	93.6	23.386	230/460	34
		1800	284TC	02518OT3E284TC-G	$2,555	N1B	387	1.15	29.9	93.6	23.386	230/460	34
		1800	284T	02518OT3H284T-G	$2,470	N1B	381	1.15	23.9	93.6	23.386	575	34
		1800	284T	02518OT3V284T-G	$2,470	N1B	382	1.15	34.4	93.6	23.386	200/400	34
		1200	324T	02512OT3E324T-G	$3,919	N1B	504	1.15	30.4	93.0	26.181	230/460	34

continued on next page

Please refer to back cover for description of "NOTES"

For detailed specifications, data sheets, drawings and performance curves visit http:// www.weg.net

Data subject to change without notice.

ODP - Three-Phase - Foot Mount and Foot Mount with C-Face - *continued*

HP	kW	RPM	Frame	Catalog Number	List Price	Mult. Symbol	Approx. Shipping Weight (lbs)	Service Factor	FL Amps @ High	FL. Eff (%)	"C" Dimension (in)	Voltage (V)	Notes
30	22	3600	284TS	030360T3E284TS-G	$2,797	N1B	353	1.15	34.7	92.4	22.000	230/460	34
		1800	286T	030180T3E286T-G	$2,840	N1B	435	1.15	35.4	94.1	24.882	230/460	34
		1800	286TC	030180T3E286TC-G	$2,925	N1B	441	1.15	35.4	94.1	24.882	230/460	34
		1800	286T	030180T3H286T-G	$2,840	N1B	434	1.15	28.3	94.1	24.882	575	34
		1800	286T	030180T3V286T-G	$2,840	N1B	436	1.15	40.7	94.1	24.882	200/400	34
		1200	326T	030120T3E326T-G	$4,290	N1B	569	1.15	36.0	93.6	27.667	230/460	34
40	30	3600	286TS	040360T3E286TS-G	$3,618	N1B	391	1.15	47.1	93.0	23.504	230/460	34
		1800	324TS	040180T3E324TS-G	$3,372	N1B	574	1.15	48.2	94.1	24.685	230/460	34
		1800	324T	040180T3E324T-G	$3,495	N1B	507	1.15	48.2	94.1	26.181	230/460	34
		1800	324TC	040180T3E324TC-G	$3,595	N1B	518	1.15	48.2	94.1	26.181	230/460	34
		1800	324T	040180T3H324T-G	$3,495	N1B	505	1.15	38.6	94.1	26.181	575	34
		1800	324T	040180T3V324T-G	$3,495	N1B	507	1.15	55.4	94.1	26.181	200/400	34
		1800	324TC	040180T3V324TC-G	$3,595	N1B	574	1.15	55.4	94.1	26.181	200/400	34
		1200	364/5T	040120T3E364T-G	$6,384	N1B	913	1.15	47.1	94.1	29.764	230/460	34
50	37	3600	324TS	050360T3E324TS-G	$4,097	N1B	541	1.15	59.1	93.6	24.685	230/460	34
		3600	324TSC	050360T3E324TSC-G	$4,197	N1B	521	1.15	59.1	93.6	24.685	230/460	34
		1800	326T	050180T3E326T-G	$4,188	N1B	577	1.15	59.9	94.5	27.667	230/460	34
		1800	326TC	050180T3E326TC-G	$4,288	N1B	587	1.15	59.9	94.5	27.667	230/460	34
		1800	326T	050180T3H326T-G	$4,188	N1B	574	1.15	47.9	94.5	27.667	575	34
		1800	326T	050180T3V326T-G	$4,188	N1B	579	1.15	68.9	94.5	27.667	200/400	34
		1200	364/5T	050120T3E365T-G	$7,232	N1B	924	1.15	58.8	94.1	29.764	230/460	34
60	45	3600	326TS	060360T3E326TS-G	$4,858	N1B	549	1.15	71.0	93.6	26.181	230/460	34
		1800	364/5T	060180T3E364T-G	$5,283	N1B	892	1.15	69.9	95.0	29.764	230/460	34
		1800	364/5TC	060180T3E364TC-G	$5,677	N1B	923	1.15	69.9	95.0	29.764	230/460	34
		1800	364/5T	060180T3H364T-G	$5,283	N1B	935	1.15	55.9	95.0	29.764	575	34
		1200	404/5T	060120T3E404T-G	$8,762	N1B	1095	1.15	70.3	94.5	34.133	230/460	34
75	55	3600	364/5TS	075360T3E364TS-G	$6,172	N1B	845	1.15	83.4	94.1	27.638	230/460	34
		1800	364/5T	075180T3E365T-G	$6,498	N1B	958	1.15	83.5	95.0	29.764	230/460	34
		1800	364/5TC	075180T3E365TC-G	$6,892	N1B	989	1.15	83.5	95.0	29.764	230/460	34
		1800	364/5T	075180T3H365T-G	$6,498	N1B	935	1.15	66.8	95.0	29.764	575	34
		1200	404/5T	075120T3E405T-G	$9,558	N1B	1121	1.15	85.9	94.5	34.133	230/460	34
100	75	3600	364/5TS	100360T3E365TS-G	$7,484	N1B	905	1.15	112	94.5	27.638	230/460	34
		1800	404/5TS	100180T3E404TS-G	$7,751	N1B	1207	1.15	113	95.4	31.141	230/460	34
		1800	404/5T	100180T3E404T-G	$8,341	N1B	1101	1.15	113	95.4	34.133	230/460	34
		1800	404/5T	100180T3H404T-G	$8,341	N1B	1207	1.15	90.4	95.4	34.133	575	34
		1200	444/5T	100120T3E444T-G	$13,463	N1B	1521	1.15	125	95.0	39.803	230/460	34
125	90	3600	404/5TS	125360T3E404TS-G	$10,026	N1B	1049	1.15	133	94.5	31.141	230/460	34
		1800	404/5T	125180T3E405T-G	$9,181	N1B	1181	1.15	136	95.4	34.133	230/460	34
		1800	404/5TC	125180T3E405TC-G	$9,627	N1B	1201	1.15	136	95.4	34.133	230/460	34
		1800	404/5T	125180T3H405T-G	$9,181	N1B	1189	1.15	109	95.4	34.133	575	34
		1200	444/5T	125120T3G445T-G	$14,353	N1B	1602	1.15	158	95.0	39.803	460	34
150	110	3600	404/5TS	150360T3G405TS-G	$12,616	N1B	1114	1.15	162	94.5	31.141	460	34

Please refer to back cover for description of "NOTES"

For detailed specifications, data sheets, drawings and performance curves visit http://www.weg.net

Air Handling Motors

COOLING TOWER MOTORS

Three-Phase TEFC & TEAO

WEG's cooling tower motors are designed for operation in 100% humidity and the most corrosive environments. They are designed to operate in either horizontal or vertical mounting.

WEG's W22 cast iron platform has a superior cooling system and solid feet for cool operation and low vibration and noise extending the life of the motor.

Standard Features:

- 50/60 Hz rated (380V on Nameplate - 400/415 Available - Same Horse Power at 50 Hz with a 1.0 Service Factor)
- Class F insulation (Impregnation Resin and magnet Wire are class H)
- Standard mounting is F2. F1 mounted motors are identified in the part number. (Both configurations are convertible).
- Stainless Steel Nameplate - Laser etched with high contrast background
- Double Sealed bearings
- Space Heaters 110-127/200-240V (200-240V 143/5T)

Features that make a difference:

- 1.25 Service Factor
- Multiple endbell drain plugs for shaft up, down or horizontal mounting
- Drain plugs in terminal box
- Rubber lead separator between terminal box and frame
- Internally and externally epoxy painted
- Double sealed bearings
- Double impregnation and bake

Inverter Rated:
1000:1 for variable torque

ADDITIONAL TECHNICAL DATA

ELECTRICAL DATA: B-27
MECHANICAL DATA: B-86; B-90

TEFC - Three-Phase - Foot Mount - NEMA Premium®

HP	kW	RPM	Frame	Catalog Number	List Price	Mult. Symbol	Approx. Shipping Weight (lbs)	Service Factor	FL Amps @ High	FL. Eff (%)	"C" Dimension (in)	Voltage (V)	Notes
1	0.75	1800	143T	00118ET3ECT143TF1-W2	$647	L1	48	1.25	1.47	85.5	12.346	230/460	
		1800	143T	00118ET3ECT143T-W22	$647	L1	48	1.25	1.47	85.5	12.346	230/460	7
		1800	143T	00118ET3PCT143T-W22	$647	L1	48	1.25	3.38	85.5	12.346	200	7
		1200	143/5T	00112ET3ECT145TF1-W2	$728	L1	56	1.25	1.73	82.5	13.358	230/460	
		1200	143/5T	00112ET3ECT145T-W22	$728	L1	58	1.25	1.73	82.5	13.358	230/460	7
		1200	143/5T	00112ET3PCT145TF1-W2	$728	L1	56	1.25	3.98	82.5	13.358	200	
		1200	143/5T	00112ET3PCT145T-W22	$728	L1	58	1.25	3.98	82.5	13.358	200	7
1.5	1.1	1800	143/5T	00158ET3ECT145TF1-W2	$676	L1	56	1.25	2.02	86.5	13.358	230/460	
		1800	143/5T	00158ET3ECT145T-W22	$676	L1	56	1.25	2.02	86.5	13.358	230/460	7
		1800	143/5T	00158ET3PCT145TF1-W2	$676	L1	56	1.25	4.65	86.5	13.358	200	
		1800	143/5T	00158ET3PCT145T-W22	$676	L1	56	1.25	4.65	86.5	13.358	200	7
		1200	182T	00152ET3ECT182T-W22	$903	L1	98	1.25	2.54	87.5	14.860	230/460	7
		1200	182T	00152ET3PCT182T-W22	$903	L1	79	1.25	5.84	87.5	14.860	200	7
2	1.5	1800	143/5T	00218ET3ECT145TF1-W2	$752	L1	58	1.25	2.76	86.5	13.358	230/460	
		1800	143/5T	00218ET3ECT145T-W22	$752	L1	58	1.25	2.76	86.5	13.358	230/460	7
		1800	143/5T	00218ET3HCT145T-W22	$752	L1	58	1.25	2.21	86.5	13.358	575	7
		1800	143/5T	00218ET3PCT145TF1-W2	$752	L1	58	1.25	6.35	86.5	13.358	200	
		1800	143/5T	00218ET3PCT145T-W22	$752	L1	58	1.25	6.35	86.5	13.358	200	7
		1200	182/4T	00212ET3ECT184T-W22	$981	L1	107	1.25	3.23	88.5	15.860	230/460	7
		1200	182/4T	00212ET3PCT184T-W22	$981	L1	97	1.25	7.43	88.5	15.860	200	7
3	2.2	1800	182T	00318ET3ECT182TF1-W2	$781	L1	96	1.25	3.91	89.5	14.860	230/460	
		1800	182T	00318ET3ECT182T-W22	$781	L1	96	1.25	3.91	89.5	14.860	230/460	7
		1800	182T	00318ET3HCT182TF1-W2	$781	L1	95	1.25	3.13	89.5	14.860	575	
		1800	182T	00318ET3HCT182T-W22	$781	L1	95	1.25	3.13	89.5	14.860	575	7
		1800	182T	00318ET3PCT182TF1-W2	$781	L1	96	1.25	8.99	89.5	14.860	200	
		1800	182T	00318ET3PCT182T-W22	$781	L1	96	1.25	8.99	89.5	14.860	200	7
		1200	213T	00312ET3ECT213T-W22	$1,329	L1	158	1.25	4.41	89.5	18.021	230/460	7
		1200	213T	00312ET3HCT213T-W22	$1,329	L1	152	1.25	3.53	89.5	19.517	575	7
		1200	213T	00312ET3PCT213T-W22	$1,329	L1	159	1.25	10.1	89.5	18.021	200	7
5	3.7	1800	182/4T	00518ET3ECT184TF1-W2	$894	L1	108	1.25	6.45	89.5	15.860	230/460	
		1800	182/4T	00518ET3ECT184T-W22	$894	L1	108	1.25	6.45	89.5	15.860	230/460	7
		1800	182/4T	00518ET3HCT184TF1-W2	$894	L1	108	1.25	5.16	89.5	15.860	575	
		1800	182/4T	00518ET3HCT184T-W22	$894	L1	108	1.25	5.16	89.5	15.860	575	7
		1800	182/4T	00518ET3PCT184TF1-W2	$894	L1	108	1.25	14.8	89.5	15.860	200	
		1800	182/4T	00518ET3PCT184T-W22	$894	L1	108	1.25	14.8	89.5	15.860	200	7
		1200	213/5T	00512ET3ECT215TF1-W2	$1,517	L1	175	1.25	6.83	89.5	19.517	230/460	
		1200	213/5T	00512ET3ECT215T-W22	$1,517	L1	183	1.25	6.83	89.5	19.517	230/460	7
		1200	213/5T	00512ET3HCT215T-W22	$1,517	L1	175	1.25	5.46	89.5	19.517	575	7
		1200	213/5T	00512ET3PCT215T-W22	$1,517	L1	184	1.25	15.7	89.5	19.517	200	7

continued on next page

Please refer to back cover for description of "NOTES"

For detailed specifications, data sheets, drawings and performance curves visit http:// www.weg.net

TEFC - Three-Phase - Foot Mount - NEMA Premium® - *continued*

HP	kW	RPM	Frame	Catalog Number	List Price	Mult. Symbol	Approx. Shipping Weight (lbs)	Service Factor	FL Amps @ High	FL. Eff (%)	"C" Dimension (in)	Voltage (V)	Notes
7.5	5.5	1800	213T	00718ET3ECT213TF1-W2	$1,293	L1	171	1.25	9.18	91.7	18.021	230/460	
		1800	213T	00718ET3ECT213T-W22	$1,293	L1	171	1.25	9.18	91.7	18.021	230/460	7
		1800	213T	00718ET3HCT213TF1-W2	$1,293	L1	170	1.25	7.34	91.7	18.021	575	
		1800	213T	00718ET3HCT213T-W22	$1,293	L1	170	1.25	7.34	91.7	18.021	575	7
		1800	213T	00718ET3PCT213TF1-W2	$1,293	L1	171	1.25	21.1	91.7	18.021	200	
		1800	213T	00718ET3PCT213T-W22	$1,293	L1	171	1.25	21.1	91.7	18.021	200	7
		1200	254T	00712ET3ECT254T-W22	$2,433	L1	311	1.25	9.48	91.0	23.213	230/460	7
		1200	254T	00712ET3HCT254T-W22	$2,433	L1	299	1.25	7.58	91.0	23.213	575	7
		1200	254T	00712ET3PCT254T-W22	$2,433	L1	311	1.25	21.8	91.0	23.213	200	7
10	7.5	1800	213/5T	01018ET3ECT215TF1-W2	$1,475	L1	192	1.25	12.4	91.7	19.517	230/460	
		1800	213/5T	01018ET3ECT215T-W22	$1,475	L1	192	1.25	12.4	91.7	19.517	230/460	7
		1800	213/5T	01018ET3HCT215TF1-W2	$1,475	L1	192	1.25	9.92	91.7	19.517	575	
		1800	213/5T	01018ET3HCT215T-W22	$1,475	L1	192	1.25	9.92	91.7	19.517	575	7
		1800	213/5T	01018ET3PCT215TF1-W2	$1,475	L1	192	1.25	28.5	91.7	19.517	200	
		1800	213/5T	01018ET3PCT215T-W22	$1,475	L1	192	1.25	28.5	91.7	19.517	200	7
		1200	254/6T	01012ET3ECT256TF1-W2	$2,751	L1	331	1.25	12.9	91.0	24.945	230/460	
		1200	254/6T	01012ET3ECT256T-W22	$2,751	L1	331	1.25	12.9	91.0	24.945	230/460	7
		1200	254/6T	01012ET3HCT256T-W22	$2,751	L1	343	1.25	10.3	91.0	24.945	575	7
		1200	254/6T	01012ET3PCT256T-W22	$2,751	L1	331	1.25	29.7	91.0	24.945	200	7
15	11	1800	254T	01518ET3ECT254TF1-W2	$2,122	L1	341	1.25	18.0	92.4	23.213	230/460	
		1800	254T	01518ET3ECT254T-W22	$2,122	L1	341	1.25	18.0	92.4	23.213	230/460	7
		1800	254T	01518ET3HCT254TF1-W2	$2,122	L1	341	1.25	14.4	92.4	23.213	575	
		1800	254T	01518ET3HCT254T-W22	$2,122	L1	341	1.25	14.4	92.4	23.213	575	7
		1800	254T	01518ET3PCT254TF1-W2	$2,122	L1	342	1.25	41.4	92.4	23.213	200	
		1800	254T	01518ET3PCT254T-W22	$2,122	L1	342	1.25	41.4	92.4	23.213	200	7
		1200	284T	01512ET3ECT284T-W22	$3,850	L1	422	1.25	17.9	91.7	26.433	230/460	7
		1200	284T	01512ET3PCT284T-W22	$3,850	L1	423	1.25	41.2	91.7	26.433	200	7
20	15	1800	254/6T	02018ET3ECT256TF1-W2	$2,549	L1	403	1.25	24.1	93.0	24.945	230/460	
		1800	254/6T	02018ET3ECT256T-W22	$2,549	L1	387	1.25	24.1	93.0	24.945	230/460	7
		1800	254/6T	02018ET3HCT256TF1-W2	$2,549	L1	402	1.25	19.3	93.0	24.945	575	
		1800	254/6T	02018ET3HCT256T-W22	$2,549	L1	402	1.25	19.3	93.0	24.945	575	7
		1800	254/6T	02018ET3PCT256TF1-W2	$2,549	L1	403	1.25	55.4	93.0	24.945	200	
		1800	254/6T	02018ET3PCT256T-W22	$2,549	L1	403	1.25	55.4	93.0	24.945	200	7
		1200	284/6T	02012ET3ECT286T-W22	$4,635	L1	461	1.25	24.2	91.7	27.929	230/460	7
		1200	284/6T	02012ET3PCT286T-W22	$4,635	L1	503	1.25	55.7	91.7	27.929	200	7
25	18.5	1800	284T	02518ET3ECT284TF1-W2	$3,236	L1	441	1.25	29.5	93.6	26.433	230/460	
		1800	284T	02518ET3ECT284T-W22	$3,236	L1	441	1.25	29.5	93.6	26.433	230/460	7
		1800	284T	02518ET3HCT284TF1-W2	$3,236	L1	439	1.25	23.6	93.6	26.433	575	
		1800	284T	02518ET3HCT284T-W22	$3,236	L1	439	1.25	23.6	93.6	26.433	575	7
		1800	284T	02518ET3PCT284TF1-W2	$3,236	L1	440	1.25	67.9	93.6	26.433	200	
		1800	284T	02518ET3PCT284T-W22	$3,236	L1	440	1.25	67.9	93.6	26.433	200	7
		1200	324T	02512ET3ECT324T-W22	$5,543	L1	575	1.25	30.4	93.0	29.620	230/460	7
		1200	324T	02512ET3PCT324T-W22	$5,543	L1	574	1.25	69.9	93.0	29.620	200	7

continued on next page

Please refer to back cover for description of "NOTES"

For detailed specifications, data sheets, drawings and performance curves visit http:// www.weg.net

Data subject to change without notice.

TEFC - Three-Phase - Foot Mount - NEMA Premium® - *continued*

HP	kW	RPM	Frame	Catalog Number	List Price	Mult. Symbol	Approx. Shipping Weight (lbs)	Service Factor	FL Amps @ High	FL. Eff (%)	"C" Dimension (in)	Voltage (V)	Notes
30	22	1800	284/6T	03018ET3ECT286TF1-W2	$3,738	L1	490	1.25	35.1	93.6	27.929	230/460	
		1800	284/6T	03018ET3ECT286T-W22	$3,738	L1	490	1.25	35.1	93.6	27.929	230/460	7
		1800	284/6T	03018ET3HCT286TF1-W2	$3,738	L1	489	1.25	28.1	93.6	27.929	575	
		1800	284/6T	03018ET3HCT286T-W22	$3,738	L1	489	1.25	28.1	93.6	27.929	575	7
		1800	284/6T	03018ET3PCT286TF1-W2	$3,738	L1	491	1.25	80.7	93.6	27.929	200	
		1800	284/6T	03018ET3PCT286T-W22	$3,738	L1	491	1.25	80.7	93.6	27.929	200	7
		1200	324/6T	03012ET3ECT326T-W22	$6,064	L1	673	1.25	36.2	93.0	31.116	230/460	7
		1200	324/6T	03012ET3PCT326T-W22	$6,064	L1	634	1.25	83.3	93.0	31.116	200	7
40	30	1800	324T	04018ET3ECT324TF1-W2	$4,805	L1	605	1.25	47.1	94.1	29.620	230/460	
		1800	324T	04018ET3ECT324T-W22	$4,805	L1	605	1.25	47.1	94.1	29.620	230/460	7
		1800	324T	04018ET3HCT324TF1-W2	$4,805	L1	603	1.25	37.7	94.1	29.620	575	
		1800	324T	04018ET3HCT324T-W22	$4,805	L1	603	1.25	37.7	94.1	29.620	575	7
		1800	324T	04018ET3PCT324TF1-W2	$4,805	L1	606	1.25	108	94.1	29.620	200	
		1800	324T	04018ET3PCT324T-W22	$4,805	L1	606	1.25	108	94.1	29.620	200	7
		1200	364/5T	04012ET3ECT364T-W22	$8,376	L1	1003	1.25	46.5	94.1	34.251	230/460	7
		1200	364/5T	04012ET3PCT364T-W22	$8,376	L1	1076	1.25	107	94.1	34.251	200	7
50	37	1800	324/6T	05018ET3ECT326TF1-W2	$5,865	L1	644	1.25	59.2	94.5	31.116	230/460	
		1800	324/6T	05018ET3ECT326T-W22	$5,865	L1	643	1.25	59.2	94.5	31.116	230/460	7
		1800	324/6T	05018ET3HCT326TF1-W2	$5,865	L1	644	1.25	47.4	94.5	31.116	575	
		1800	324/6T	05018ET3HCT326T-W22	$5,865	L1	644	1.25	47.4	94.5	31.116	575	7
		1800	324/6T	05018ET3PCT326T-W22	$5,865	L1	662	1.25	136	94.5	31.116	200	7
		1200	364/5T	05012ET3ECT365T-W22	$9,625	L1	1020	1.25	57.4	94.1	34.251	230/460	7
		1200	364/5T	05012ET3PCT365T-W22	$9,625	L1	1127	1.25	132	94.1	34.251	200	7
60	45	1800	364/5T	06018ET3ECT364TF1-W2	$8,497	L1	1009	1.25	68.3	95.0	34.251	230/460	
		1800	364/5T	06018ET3ECT364T-W22	$8,497	L1	1029	1.25	68.3	95.0	34.251	230/460	7
		1800	364/5T	06018ET3HCT364TF1-W2	$8,497	L1	1009	1.25	54.6	95.0	34.251	575	
		1800	364/5T	06018ET3HCT364T-W22	$8,497	L1	1009	1.25	54.6	95.0	34.251	575	7
		1800	364/5T	06018ET3PCT364T-W22	$8,497	L1	1036	1.25	157	95.0	34.251	200	7
		1200	404/5T	06012ET3ECT404T-W22	$11,861	L1	1272	1.25	69.5	94.5	39.730	230/460	7
		1200	404/5T	06012ET3PCT404T-W22	$11,861	L1	1346	1.25	160	94.5	39.730	200	7
75	55	1800	364/5T	07518ET3ECT365TF1-W2	$9,924	L1	1007	1.25	84.1	95.4	34.251	230/460	
		1800	364/5T	07518ET3ECT365T-W22	$9,924	L1	1046	1.25	84.1	95.4	34.251	230/460	7
		1800	364/5T	07518ET3HCT365T-W22	$9,924	L1	1007	1.25	67.3	95.4	34.251	575	7
		1800	364/5T	07518ET3PCT365T-W22	$9,924	L1	1047	1.25	193	95.4	34.251	200	7
		1200	404/5T	07512ET3ECT405T-W22	$13,626	L1	1243	1.25	84.9	94.5	39.730	230/460	7
		1200	404/5T	07512ET3PCT405T-W22	$13,626	L1	1478	1.25	195	94.5	39.730	200	7
100	75	1800	404/5T	10018ET3ECT405T-W22	$13,092	L1	1303	1.25	111	95.4	39.730	230/460	7
		1800	404/5T	10018ET3PCT405T-W22	$13,092	L1	1302	1.25	255	95.4	39.730	200	7
		1200	444/5T	10012ET3ECT444T-W22	$17,194	L1	2006	1.25	121	95.0	44.950	230/460	7
		1200	444/5T	10012ET3PCT444T-W22	$17,194	L1	2006	1.25	278	95.0	44.950	200	7

Please refer to back cover for description of "NOTES"

For detailed specifications, data sheets, drawings and performance curves visit http:// www.weg.net

Air Handling Motors

COOLING TOWER MOTORS - THREE-PHASE

TEAO - Three-Phase - Foot Mount - NEMA Premium®

HP	kW	RPM	Frame	Catalog Number	List Price	Mult. Symbol	Approx. Shipping Weight (lbs)	Service Factor	FL Amps @ High	FL. Eff (%)	"C" Dimension (in)	Voltage (V)	Notes
1	0.75	1800	143T	00118AT3PCT143T-W22	$666	L1	54	1.25	3.38	85.5	12.353	200	7
1.5	1.1	1800	143/5T	00158AT3PCT145T-W22	$696	L1	56	1.25	4.65	86.5	13.338	200	7
2	1.5	1800	143/5T	00218AT3ECT145TF1-W2	$775	L1	58	1.25	2.76	86.5	13.338	230/460	
		1800	143/5T	00218AT3ECT145T-W22	$775	L1	58	1.25	2.76	86.5	13.338	230/460	7
		1800	143/5T	00218AT3PCT145T-W22	$775	L1	58	1.25	6.35	86.5	13.338	200	7
		1200	182/4T	00212AT3ECT184TF1-W2	$1,010	L1	105	1.25	3.23	88.5	15.298	230/460	
		1200	182/4T	00212AT3ECT184T-W22	$1,010	L1	97	1.25	3.23	88.5	15.298	230/460	
		1200	182/4T	00212AT3HCT184TF1-W2	$1,010	L1	97	1.25	2.58	88.5	15.298	575	
		1200	182/4T	00212AT3HCT184T-W22	$1,010	L1	97	1.25	2.58	88.5	15.298	575	7
		1200	182/4T	00212AT3PCT184TF1-W2	$1,010	L1	106	1.25	7.43	88.5	15.298	200	
		1200	182/4T	00212AT3PCT184T-W22	$1,010	L1	97	1.25	7.43	88.5	15.298	200	7
3	2.2	1800	182T	00318AT3ECT182TF1-W2	$804	L1	94	1.25	3.91	89.5	14.298	230/460	
		1800	182T	00318AT3ECT182T-W22	$804	L1	94	1.25	3.91	89.5	14.298	230/460	7
		1800	182T	00318AT3HCT182T-W22	$804	L1	96	1.25	3.13	89.5	14.298	575	7
		1800	182T	00318AT3PCT182TF1-W2	$804	L1	99	1.25	8.99	89.5	14.298	200	
		1800	182T	00318AT3PCT182T-W22	$804	L1	94	1.25	8.99	89.5	14.298	200	7
		1200	213T	00312AT3ECT213TF1-W2	$1,369	L1	157	1.25	4.41	89.5	17.239	230/460	
		1200	213T	00312AT3ECT213T-W22	$1,369	L1	134	1.25	4.41	89.5	17.239	230/460	7
		1200	213T	00312AT3HCT213T-W22	$1,369	L1	134	1.25	3.53	89.5	17.239	575	7
		1200	213T	00312AT3PCT213TF1-W2	$1,369	L1	159	1.25	10.1	89.5	17.239	200	
		1200	213T	00312AT3PCT213T-W22	$1,369	L1	134	1.25	10.1	89.5	17.239	200	7
5	3.7	1800	182/4T	00518AT3ECT184TF1-W2	$921	L1	107	1.25	6.45	89.5	15.298	230/460	
		1800	182/4T	00518AT3ECT184T-W22	$921	L1	107	1.25	6.45	89.5	15.298	230/460	7
		1800	182/4T	00518AT3HCT184TF1-W2	$921	L1	107	1.25	5.16	89.5	15.298	575	
		1800	182/4T	00518AT3HCT184T-W22	$921	L1	104	1.25	5.16	89.5	15.298	575	7
		1800	182/4T	00518AT3PCT184TF1-W2	$921	L1	107	1.25	14.8	89.5	15.298	200	
		1800	182/4T	00518AT3PCT184T-W22	$921	L1	107	1.25	14.8	89.5	15.298	200	7
		1200	213/5T	00512AT3ECT215TF1-W2	$1,563	L1	182	1.25	6.83	89.5	18.739	230/460	
		1200	213/5T	00512AT3ECT215T-W22	$1,563	L1	175	1.25	6.83	89.5	18.739	230/460	7
		1200	213/5T	00512AT3HCT215TF1-W2	$1,563	L1	175	1.25	5.46	89.5	18.739	575	
		1200	213/5T	00512AT3HCT215T-W22	$1,563	L1	175	1.25	5.46	89.5	18.739	575	7
		1200	213/5T	00512AT3PCT215TF1-W2	$1,563	L1	183	1.25	15.7	89.5	18.739	200	
		1200	213/5T	00512AT3PCT215T-W22	$1,563	L1	175	1.25	15.7	89.5	18.739	200	7
7.5	5.5	1800	213T	00718AT3ECT213TF1-W2	$1,332	L1	170	1.25	9.18	91.7	17.239	230/460	
		1800	213T	00718AT3ECT213T-W22	$1,332	L1	170	1.25	9.18	91.7	17.239	230/460	7
		1800	213T	00718AT3HCT213TF1-W2	$1,332	L1	169	1.25	7.34	91.7	17.239	575	
		1800	213T	00718AT3HCT213T-W22	$1,332	L1	169	1.25	7.34	91.7	17.239	575	7
		1800	213T	00718AT3PCT213TF1-W2	$1,332	L1	170	1.25	21.1	91.7	17.239	200	
		1800	213T	00718AT3PCT213T-W22	$1,332	L1	170	1.25	21.1	91.7	17.239	200	7
		1200	254T	00712AT3ECT254TF1-W2	$2,506	L1	297	1.25	9.48	91.0	21.594	230/460	39
		1200	254T	00712AT3PCT254TF1-W2	$2,506	L1	299	1.25	21.8	91.0	21.594	200	39

continued on next page

Please refer to back cover for description of "NOTES"

For detailed specifications, data sheets, drawings and performance curves visit http:// www.weg.net

Data subject to change without notice.

TEAO - Three-Phase - Foot Mount - NEMA Premium® - *continued*

HP	kW	RPM	Frame	Catalog Number	List Price	Mult. Symbol	Approx. Shipping Weight (lbs)	Service Factor	FL Amps @ High	FL. Eff (%)	"C" Dimension (in)	Voltage (V)	Notes
10	7.5	1800	213/5T	01018AT3ECT215TF1-W2	$1,519	L1	192	1.25	12.4	91.7	18.739	230/460	
		1800	213/5T	01018AT3ECT215T-W22	$1,519	L1	192	1.25	12.4	91.7	18.739	230/460	7
		1800	213/5T	01018AT3HCT215TF1-W2	$1,519	L1	191	1.25	9.92	91.7	18.739	575	
		1800	213/5T	01018AT3HCT215T-W22	$1,519	L1	191	1.25	9.92	91.7	18.739	575	7
		1800	213/5T	01018AT3PCT215TF1-W2	$1,519	L1	191	1.25	28.5	91.7	18.739	200	
		1800	213/5T	01018AT3PCT215T-W22	$1,519	L1	191	1.25	28.5	91.7	18.739	200	7
		1200	254/6T	01012AT3ECT256TF1-W2	$2,919	L1	317	1.25	12.9	91.0	23.343	230/460	
		1200	254/6T	01012AT3PCT256TF1-W2	$2,919	L1	333	1.25	29.7	91.0	23.343	200	
		1200	254/6T	01012AT3PCT256T-W22	$2,919	L1	333	1.25	29.7	91.0	23.343	200	7
15	11	1800	254T	01518AT3ECT254TF1-W2	$2,186	L1	327	1.25	18.0	92.4	21.594	230/460	
		1800	254T	01518AT3ECT254T-W22	$2,186	L1	327	1.25	18.0	92.4	21.594	230/460	7
		1800	254T	01518AT3HCT254TF1-W2	$2,186	L1	327	1.25	14.4	92.4	21.594	575	
		1800	254T	01518AT3HCT254T-W22	$2,186	L1	327	1.25	14.4	92.4	21.594	575	7
		1800	254T	01518AT3PCT254TF1-W2	$2,186	L1	328	1.25	41.4	92.4	21.594	200	
		1800	254T	01518AT3PCT254T-W22	$2,186	L1	328	1.25	41.4	92.4	21.594	200	7
20	15	1800	254/6T	02018AT3ECT256TF1-W2	$2,625	L1	389	1.25	24.1	93.0	23.343	230/460	
		1800	254/6T	02018AT3ECT256T-W22	$2,625	L1	389	1.25	24.1	93.0	23.343	230/460	7
		1800	254/6T	02018AT3HCT256TF1-W2	$2,625	L1	388	1.25	19.3	93.0	23.343	575	
		1800	254/6T	02018AT3HCT256T-W22	$2,625	L1	388	1.25	19.3	93.0	23.343	575	7
		1800	254/6T	02018AT3PCT256TF1-W2	$2,625	L1	389	1.25	55.4	93.0	23.343	200	
		1800	254/6T	02018AT3PCT256T-W22	$2,625	L1	389	1.25	55.4	93.0	23.343	200	7
25	18.5	1800	284T	02518AT3ECT284TF1-W2	$3,333	L1	423	1.25	29.5	93.6	25.418	230/460	
		1800	284T	02518AT3ECT284T-W22	$3,333	L1	423	1.25	29.5	93.6	25.418	230/460	7
		1800	284T	02518AT3HCT284TF1-W2	$3,333	L1	422	1.25	23.6	93.6	25.418	575	
		1800	284T	02518AT3HCT284T-W22	$3,333	L1	422	1.25	23.6	93.6	25.418	575	7
		1800	284T	02518AT3PCT284TF1-W2	$3,333	L1	422	1.25	67.9	93.6	25.418	200	
		1800	284T	02518AT3PCT284T-W22	$3,333	L1	422	1.25	67.9	93.6	25.418	200	7
		1200	324T	02512AT3ECT324TF1-W2	$5,709	L1	555	1.25	30.4	93.0	28.575	230/460	
		1200	324T	02512AT3HCT324TF1-W2	$5,709	L1	605	1.25	24.3	93.0	28.575	575	
30	22	1800	284/6T	03018AT3ECT286TF1-W2	$3,850	L1	473	1.25	35.1	93.6	26.918	230/460	
		1800	284/6T	03018AT3ECT286T-W22	$3,850	L1	473	1.25	35.1	93.6	26.918	230/460	7
		1800	284/6T	03018AT3HCT286TF1-W2	$3,850	L1	471	1.25	28.1	93.6	26.918	575	
		1800	284/6T	03018AT3HCT286T-W22	$3,850	L1	469	1.25	28.1	93.6	26.918	575	7
		1800	284/6T	03018AT3PCT286TF1-W2	$3,850	L1	473	1.25	80.7	93.6	26.918	200	
		1800	284/6T	03018AT3PCT286T-W22	$3,850	L1	473	1.25	80.7	93.6	26.918	200	7
		1200	324/6T	03012AT3PCT326TF1-W2	$6,246	L1	673	1.25	83.3	93.0	30.071	200	
40	30	1800	324T	04018AT3ECT324TF1-W2	$4,949	L1	586	1.25	47.1	94.1	28.575	230/460	
		1800	324T	04018AT3ECT324T-W22	$4,949	L1	586	1.25	47.1	94.1	28.575	230/460	7
		1800	324T	04018AT3HCT324TF1-W2	$4,949	L1	584	1.25	37.7	94.1	28.575	575	
		1800	324T	04018AT3HCT324T-W22	$4,949	L1	580	1.25	37.7	94.1	28.575	575	7
		1800	324T	04018AT3PCT324TF1-W2	$4,949	L1	576	1.25	108	94.1	28.575	200	
		1800	324T	04018AT3PCT324T-W22	$4,949	L1	581	1.25	108	94.1	28.575	200	7
50	37	1800	324/6T	05018AT3ECT326T-W22	$6,041	L1	662	1.25	59.2	94.5	30.071	230/460	7
		1800	324/6T	05018AT3HCT326T-W22	$6,041	L1	662	1.25	47.3	94.5	30.071	575	7
		1800	324/6T	05018AT3PCT326T-W22	$6,041	L1	662	1.25	136	94.5	30.071	200	7
60	45	1800	364/5T	06018AT3ECT364T-W22	$8,752	L1	1036	1.25	68.3	95.0	29.390	230/460	7
75	55	1800	364/5T	07518AT3ECT365T-W22	$10,222	L1	1047	1.25	84.1	95.4	29.390	230/460	7

Please refer to back cover for description of "NOTES"

For detailed specifications, data sheets, drawings and performance curves visit http:// www.weg.net

TEFC - Dual Speed (1 & 2 Windings) - High Efficiency

HP	kW	RPM	Frame	Catalog Number	List Price	Mult. Symbol	Approx. Shipping Weight (lbs)	Service Factor	FL Amps @ High	FL. Eff (%)	"C" Dimension (in)	Voltage (V)	Notes
2/0.50	1.5/0.37	1800/900	143/5T	**00289EP3PCT145VF1-W2**	**$929**	H1	53	1.25	6.40	82.5	13.358	200	23;30
		1800/900	143/5T	**00289EP3PCT145V-W22**	**$929**	H1	56	1.25	6.40	82.5	13.358	200	7;23;30
		1200/600	213T	**00226EP3QCT213VF1-W2**	**$2,021**	H1	53	1.15	3.35	84.0	18.021	460	23;30
		1200/600	213T	**00226EP3QCT213V-W22**	**$2,021**	H1	53	1.15	3.35	84.0	18.021	460	7;23;30
3/0.75	2.2/0.55	1800/900	182T	**00389EP3QCT182VF1-W2**	**$1,369**	H1	100	1.25	3.99	87.5	14.860	460	23;30
		1800/900	182T	**00389EP3QCT182V-W22**	**$1,369**	H1	94	1.25	3.99	87.5	14.860	460	7;23;30
		1800/900	182T	**00389EP3PCT182VF1-W2**	**$1,369**	H1	95	1.25	9.18	87.5	14.860	200	23;30
		1800/900	182T	**00389EP3PCT182V-W22**	**$1,369**	H1	100	1.25	9.18	87.5	14.860	200	7;23;30
		1200/600	213/5T	**00326EP3QCT215V-W22**	**$2,125**	H1	100	1.15	4.11	84.0	19.517	460	7;23;30
5/1.25	3.7/0.92	1800/900	182/4T	**00589EP3QCT184VF1-W2**	**$1,471**	H1	105	1.25	6.63	87.5	15.860	460	23;30
		1800/900	182/4T	**00589EP3QCT184V-W22**	**$1,471**	H1	104	1.25	6.63	87.5	15.860	460	7;23;30
		1800/900	182/4T	**00589EP3HCT184VF1-W2**	**$1,471**	H1	104	1.25	5.30	87.5	15.860	575	23;30
		1800/900	182/4T	**00589EP3HCT184V-W22**	**$1,471**	H1	104	1.25	5.30	87.5	15.860	575	7;23;30
		1800/900	182/4T	**00589EP3PCT184VF1-W2**	**$1,471**	H1	104	1.25	15.2	87.5	15.860	200	23;30
		1800/900	182/4T	**00589EP3PCT184V-W22**	**$1,471**	H1	104	1.25	15.2	87.5	15.860	200	7;23;30
		1800/900	213/5T	**00589EP3QCT215V2F1-W**	**$2,262**	H1	181	1.25	6.55	88.5	19.517	460	22;30
		1800/900	213/5T	**00589EP3QCT215V2-W22**	**$2,262**	H1	181	1.25	6.55	88.5	19.517	460	7;22;30
		1800/900	213/5T	**00589EP3PCT215V2F1-W**	**$2,262**	H1	181	1.25	15.1	88.5	19.517	200	22;30
		1200/600	254T	**00526EP3QCT254VF1-W2**	**$2,424**	H1	121	1.15	7.06	86.5	23.213	460	23;30
		1200/600	254T	**00526EP3QCT254V-W22**	**$2,424**	H1	121	1.15	7.06	86.5	23.213	460	7;23;30
7.5/1.75	5.5/1.3	1800/900	213T	**00789EP3QCT213VF1-W2**	**$1,672**	H1	168	1.25	9.51	88.5	18.021	460	23;30
		1800/900	213T	**00789EP3QCT213V-W22**	**$1,672**	H1	168	1.25	9.51	88.5	18.021	460	7;23;30
		1800/900	213T	**00789EP3HCT213V-W22**	**$1,672**	H1	164	1.25	7.61	88.5	18.021	575	7;23;30
		1800/900	213T	**00789EP3PCT213VF1-W2**	**$1,672**	H1	164	1.25	21.9	88.5	18.021	200	23;30
		1800/900	213T	**00789EP3PCT213V-W22**	**$1,672**	H1	164	1.25	21.9	88.5	18.021	200	7;23;30
		1800/900	254T	**00789EP3QCT254V2F1-W**	**$2,808**	H1	302	1.25	9.75	88.5	23.213	460	22;30
		1800/900	254T	**00789EP3QCT254V2-W22**	**$2,808**	H1	302	1.25	9.75	88.5	23.213	460	7;22;30
		1800/900	254T	**00789EP3PCT254V2F1-W**	**$2,808**	H1	302	1.25	22.4	88.5	23.213	200	22;30
		1800/900	254T	**00789EP3PCT254V2-W22**	**$2,808**	H1	302	1.25	22.4	88.5	23.213	200	7;22;30
		1200/600	254/6T	**00726EP3QCT256V-W22**	**$2,496**	H1	181	1.15	10.1	87.5	24.945	460	7;23;30
10/2.5	7.5/1.85	1800/900	213/5T	**01089EP3QCT215VF1-W2**	**$1,891**	H1	181	1.25	13.0	88.5	19.517	460	23;30
		1800/900	213/5T	**01089EP3QCT215V-W22**	**$1,891**	H1	181	1.25	13.0	88.5	19.517	460	7;23;30
		1800/900	213/5T	**01089EP3HCT215VF1-W2**	**$1,891**	H1	168	1.25	10.4	88.5	19.517	575	23;30
		1800/900	213/5T	**01089EP3HCT215V-W22**	**$1,891**	H1	168	1.25	10.4	88.5	19.517	575	7;23;30
		1800/900	213/5T	**01089EP3PCT215VF1-W2**	**$1,891**	H1	168	1.25	29.9	88.5	19.517	200	23;30
		1800/900	213/5T	**01089EP3PCT215V-W22**	**$1,891**	H1	168	1.25	29.9	88.5	19.517	200	7;23;30
		1800/900	254/6T	**01089EP3QCT256V2F1-W**	**$3,052**	H1	346	1.25	13.0	89.5	24.945	460	22;30
		1800/900	254/6T	**01089EP3QCT256V2-W22**	**$3,052**	H1	363	1.25	13.0	89.5	24.945	460	7;22;30
		1800/900	254/6T	**01089EP3PCT256V2F1-W**	**$3,052**	H1	346	1.25	29.9	89.5	24.945	200	22;30
		1800/900	254/6T	**01089EP3PCT256V2-W22**	**$3,052**	H1	346	1.25	29.9	89.5	24.945	200	7;22;30
		1200/600	284T	**01026EP3QCT284V-W22**	**$3,017**	H1	377	1.15	12.2	89.5	26.433	460	7;23;30

continued on next page

Please refer to back cover for description of "NOTES"

For detailed specifications, data sheets, drawings and performance curves visit http:// www.weg.net

Data subject to change without notice.

TEFC - Dual Speed (1 & 2 Windings) - High Efficiency - *continued*

HP	kW	RPM	Frame	Catalog Number	List Price	Mult. Symbol	Approx. Shipping Weight (lbs)	Service Factor	FL Amps @ High	FL. Eff (%)	"C" Dimension (in)	Voltage (V)	Notes
15/3.75	11/2.8	1800/900	254T	**01589EP3QCT254VF1-W2**	**$2,572**	H1	324	1.25	19.0	89.5	23.213	460	23;30
		1800/900	254T	**01589EP3QCT254V-W22**	**$2,572**	H1	324	1.25	19.0	89.5	23.213	460	7;23;30
		1800/900	254T	**01589EP3HCT254VF1-W2**	**$2,572**	H1	324	1.25	15.2	89.5	23.213	575	23;30
		1800/900	254T	**01589EP3HCT254V-W22**	**$2,572**	H1	288	1.25	15.2	89.5	23.213	575	7;23;30
		1800/900	254T	**01589EP3PCT254VF1-W2**	**$2,572**	H1	288	1.25	43.8	89.5	23.213	200	23;30
		1800/900	254T	**01589EP3PCT254V-W22**	**$2,572**	H1	288	1.25	43.8	89.5	23.213	200	7;23;30
		1800/900	284T	**01589EP3QCT284V2F1-W**	**$3,878**	H1	439	1.25	18.7	90.2	26.433	460	22;30
		1800/900	284T	**01589EP3QCT284V2-W22**	**$3,878**	H1	435	1.25	18.7	90.2	26.433	460	7;22;30
		1800/900	284T	**01589EP3PCT284V2F1-W**	**$3,878**	H1	435	1.25	43.0	90.2	26.433	200	22;30
		1800/900	284T	**01589EP3PCT284V2-W22**	**$3,878**	H1	435	1.25	43.0	90.2	26.433	200	7;22;30
		1200/600	284/6T	**01526EP3QCT286VF1-W2**	**$3,274**	H1	271	1.15	18.0	90.2	27.929	460	23;30
		1200/600	284/6T	**01526EP3QCT286V-W22**	**$3,274**	H1	271	1.15	18.0	90.2	27.929	460	7;23;30
		1200/600	284/6T	**01526EP3HCT286VF1-W2**	**$3,274**	H1	271	1.15	14.4	90.2	27.929	575	23;30
		1200/600	284/6T	**01526EP3HCT286V-W22**	**$3,274**	H1	271	1.15	14.4	90.2	27.929	575	7;23;30
		1200/600	284/6T	**01526EP3PCT286VF1-W2**	**$3,274**	H1	271	1.15	41.4	90.2	27.929	200	23;30
		1200/600	284/6T	**01526EP3PCT286V-W22**	**$3,274**	H1	271	1.15	41.4	90.2	27.929	200	7;23;30
20/5	15/3.7	1800/900	254/6T	**02089EP3QCT256VF1-W2**	**$2,923**	H1	360	1.25	26.1	90.2	24.945	460	23;30
		1800/900	254/6T	**02089EP3QCT256V-W22**	**$2,923**	H1	360	1.25	26.1	90.2	24.945	460	7;23;30
		1800/900	254/6T	**02089EP3HCT256VF1-W2**	**$2,923**	H1	335	1.25	20.9	90.2	24.945	575	23;30
		1800/900	254/6T	**02089EP3HCT256V-W22**	**$2,923**	H1	335	1.25	20.9	90.2	24.945	575	7;23;30
		1800/900	254/6T	**02089EP3PCT256VF1-W2**	**$2,923**	H1	362	1.25	60.0	90.2	24.945	200	23;30
		1800/900	254/6T	**02089EP3PCT256V-W22**	**$2,923**	H1	335	1.25	60.0	90.2	24.945	200	7;23;30
		1800/900	284/6T	**02089EP3QCT286V2F1-W**	**$4,827**	H1	503	1.25	24.9	91.0	27.929	460	22;30
		1800/900	284/6T	**02089EP3QCT286V2-W22**	**$4,827**	H1	503	1.25	24.9	91.0	27.929	460	7;22;30
		1800/900	284/6T	**02089EP3PCT286V2F1-W**	**$4,827**	H1	512	1.25	57.3	91.0	27.929	200	22;30
		1800/900	284/6T	**02089EP3PCT286V2-W22**	**$4,827**	H1	512	1.25	57.3	91.0	27.929	200	7;22;30
		1200/600	324T	**02026EP3QCT324V-W22**	**$4,101**	H1	318	1.15	24.8	90.2	29.620	460	7;23;30
25/6.3	18.5/4.6	1800/900	284/6T	**02589EP3QCT286VF1-W2**	**$4,199**	H1	500	1.25	29.4	91.7	27.929	460	23;30
		1800/900	284/6T	**02589EP3QCT286V-W22**	**$4,199**	H1	512	1.25	29.4	91.7	27.929	460	7;23;30
		1800/900	284/6T	**02589EP3HCT286VF1-W2**	**$4,199**	H1	500	1.25	23.5	91.7	27.929	575	23;30
		1800/900	284/6T	**02589EP3HCT286V-W22**	**$4,199**	H1	512	1.25	23.5	91.7	27.929	575	7;23;30
		1800/900	284/6T	**02589EP3PCT286VF1-W2**	**$4,199**	H1	512	1.25	67.6	91.7	27.929	200	23;30
		1800/900	324T	**02589EP3QCT324V2F1-W**	**$5,826**	H1	531	1.25	30.9	91.7	29.620	460	22;30
		1800/900	324T	**02589EP3QCT324V2-W22**	**$5,826**	H1	580	1.25	30.9	91.7	29.620	460	7;22;30
		1800/900	324T	**02589EP3PCT324V2F1-W**	**$5,826**	H1	531	1.25	71.1	91.7	29.620	200	22;30
		1800/900	324T	**02589EP3PCT324V2-W22**	**$5,826**	H1	531	1.25	71.1	91.7	29.620	200	7;22;30
		1200/600	324/6T	**02526EP3QCT326V-W22**	**$6,222**	H1	512	1.15	29.9	90.2	31.116	460	7;23;30

continued on next page

Please refer to back cover for description of "NOTES"

For detailed specifications, data sheets, drawings and performance curves visit http:// www.weg.net

COOLING TOWER MOTORS - THREE-PHASE

TEFC - Dual Speed (1 & 2 Windings) - High Efficiency - *continued*

HP	kW	RPM	Frame	Catalog Number	List Price	Mult. Symbol	Approx. Shipping Weight (lbs)	Service Factor	FL Amps @ High	FL. Eff (%)	"C" Dimension (in)	Voltage (V)	Notes
30/7.5	22/5.5	1800/900	324T	**03089EP3QCT324VF1-W2**	**$4,725**	H1	578	1.25	37.2	91.7	29.620	460	23;30
		1800/900	324T	**03089EP3QCT324V-W22**	**$4,725**	H1	578	1.25	37.2	91.7	29.620	460	7;23;30
		1800/900	324T	**03089EP3HCT324VF1-W2**	**$4,725**	H1	542	1.25	29.8	91.7	29.620	575	23;30
		1800/900	324T	**03089EP3HCT324V-W22**	**$4,725**	H1	542	1.25	29.8	91.7	29.620	575	7;23;30
		1800/900	324T	**03089EP3PCT324VF1-W2**	**$4,725**	H1	581	1.25	85.5	91.7	29.620	200	23;30
		1800/900	324T	**03089EP3PCT324V-W22**	**$4,725**	H1	542	1.25	85.5	91.7	29.620	200	7;23;30
		1800/900	324/6T	**03089EP3QCT326V2F1-W**	**$6,995**	H1	625	1.25	37.4	92.4	31.116	460	22;30
		1800/900	324/6T	**03089EP3QCT326V2-W22**	**$6,995**	H1	625	1.25	37.4	92.4	31.116	460	7;22;30
		1800/900	324/6T	**03089EP3PCT326V2F1-W**	**$6,995**	H1	625	1.25	86.0	92.4	31.116	200	22;30
		1800/900	324/6T	**03089EP3PCT326V2-W22**	**$6,995**	H1	625	1.25	86.0	92.4	31.116	200	7;22;30
		1200/600	364/5T	**03026EP3QCT364V-W22**	**$7,435**	H1	542	1.15	35.4	91.7	34.251	460	7;23;30
40/10	30/7.5	1800/900	324/6T	**04089EP3QCT326VF1-W2**	**$5,464**	H1	640	1.25	47.9	92.4	31.116	460	23;30
		1800/900	324/6T	**04089EP3QCT326V-W22**	**$5,464**	H1	625	1.25	47.9	92.4	31.116	460	7;23;30
		1800/900	324/6T	**04089EP3HCT326VF1-W2**	**$5,464**	H1	625	1.25	38.3	92.4	31.116	575	23;30
		1800/900	324/6T	**04089EP3HCT326V-W22**	**$5,464**	H1	625	1.25	38.3	92.4	31.116	575	7;23;30
		1800/900	324/6T	**04089EP3PCT326VF1-W2**	**$5,464**	H1	625	1.25	110	92.4	31.116	200	23;30
		1800/900	324/6T	**04089EP3PCT326V-W22**	**$5,464**	H1	625	1.25	110	92.4	31.116	200	7;23;30
		1800/900	364/5T	**04089EP3QCT364V2F1-W**	**$8,720**	H1	986	1.25	46.8	92.4	34.251	460	22;30
		1800/900	364/5T	**04089EP3QCT364V2-W22**	**$8,720**	H1	1029	1.25	46.8	92.4	34.251	460	7;22;30
		1800/900	364/5T	**04089EP3PCT364V2F1-W**	**$8,720**	H1	1029	1.25	108	92.4	34.251	200	22;30
		1800/900	364/5T	**04089EP3PCT364V2-W22**	**$8,720**	H1	1029	1.25	108	92.4	34.251	200	7;22;30
		1200/600	364/5T	**04026EP3QCT365VF1-W2**	**$9,302**	H1	965	1.25	48.9	91.7	34.251	460	23;30
		1200/600	364/5T	**04026EP3QCT365V-W22**	**$9,302**	H1	625	1.15	48.9	91.7	34.251	460	7;23;30
50/12.5	37/9.2	1800/900	364/5T	**05089EP3QCT364VF1-W2**	**$7,526**	H1	968	1.25	59.8	92.4	34.251	460	23;30
		1800/900	364/5T	**05089EP3QCT364V-W22**	**$7,526**	H1	968	1.25	59.8	92.4	34.251	460	7;23;30
		1800/900	364/5T	**05089EP3QCT365V2F1-W**	**$11,093**	H1	1042	1.25	57.0	92.5	34.251	460	22;30
		1800/900	364/5T	**05089EP3QCT365V2-W22**	**$11,093**	H1	1102	1.25	57.0	92.5	34.251	460	7;22;30
		1800/900	364/5T	**05089EP3HCT364VF1-W2**	**$7,526**	H1	1051	1.25	47.8	92.4	34.251	575	23;30
		1800/900	364/5T	**05089EP3HCT364V-W22**	**$7,526**	H1	1051	1.25	47.8	92.4	34.251	575	7;23;30
		1800/900	364/5T	**05089EP3PCT364VF1-W2**	**$7,526**	H1	1051	1.25	138	92.4	34.251	200	23;30
		1800/900	364/5T	**05089EP3PCT364V-W22**	**$7,526**	H1	1051	1.25	138	92.4	34.251	200	7;23;30
		1800/900	364/5T	**05089EP3PCT365V2F1-W**	**$11,093**	H1	1102	1.25	131	92.5	34.251	200	22;30
		1800/900	364/5T	**05089EP3PCT365V2-W22**	**$11,093**	H1	1102	1.25	131	92.5	34.251	200	7;22;30
		1200/600	364/5T	**05026EP3QCT365VF1-W2**	**$11,051**	H1	1051	1.15	59.6	91.7	34.251	460	23;30
		1200/600	364/5T	**05026EP3QCT365V-W22**	**$11,051**	H1	1051	1.15	59.6	91.7	34.251	460	7;23;30
60/15	45/11	1800/900	364/5T	**06089EP3QCT365VF1-W2**	**$11,068**	H1	997	1.25	72.3	93.0	34.251	460	23;30
		1800/900	364/5T	**06089EP3QCT365V-W22**	**$11,068**	H1	1015	1.25	72.3	93.0	34.251	460	7;23;30
		1800/900	364/5T	**06089EP3PCT365VF1-W2**	**$11,068**	H1	1102	1.25	166	93.0	34.251	200	23;30
		1800/900	364/5T	**06089EP3PCT365V-W22**	**$11,068**	H1	1102	1.25	166	93.0	34.251	200	7;23;30
75/18.5	55/13.6	1800/900	404/5T	**07589EP3QCT404VF1-W2**	**$14,226**	H1	1294	1.25	85.3	93.0	39.730	460	23;30
		1800/900	404/5T	**07589EP3QCT404V-W22**	**$14,226**	H1	1294	1.25	85.3	93.0	39.730	460	7;23;30
		1800/900	404/5T	**07589EP3PCT404VF1-W2**	**$14,226**	H1	1245	1.25	196	93.0	39.730	200	23;30
		1800/900	404/5T	**07589EP3PCT404V-W22**	**$14,226**	H1	1245	1.25	196	93.0	39.730	200	7;23;30
100/25	75/18.5	1800/900	444/5T	**10089EP3QCT444VF1-W2**	**$16,398**	H1	2149	1.25	119	94.1	44.950	460	23;30
		1800/900	444/5T	**10089EP3QCT444V-W22**	**$16,398**	H1	2162	1.25	119	94.1	44.950	460	7;23;30
		1800/900	444/5T	**10089EP3PCT444VF1-W2**	**$16,398**	H1	2149	1.25	274	94.1	44.950	200	23;30
		1800/900	444/5T	**10089EP3PCT444V-W22**	**$16,398**	H1	2149	1.25	274	94.1	44.950	200	7;23;30

Please refer to back cover for description of "NOTES"

For detailed specifications, data sheets, drawings and performance curves visit http:// www.weg.net

Data subject to change without notice.

Air Handling Motors

PAD MOUNT MOTORS

Three-Phase TEAO - NEMA Premium®

These TEAO motors are supplied with a detached terminal box and extended leads for remote installation.

Standard Features:

- Class F insulation (Impregnation Resin and magnet Wire are class H)
- Stainless Steel Nameplate - Laser etched with high contrast background
- Regreasable ball bearings (Frame 254Y and up)

Features that make a difference:

- 1.25 Service Factor
- Detached terminal box and extended leads
- Two stainless steel plates provided

Inverter Rated:
1000 : 1 for variable torque

Air Handling Motors

PAD MOUNT MOTORS - THREE-PHASE

TEAO - NEMA Premium

HP	kW	RPM	Frame	Catalog Number	List Price	Mult. Symbol	Approx. Shipping Weight (lbs)	Service Factor	FL Amps @ High	FL. Eff (%)	"C" Dimension (in)	Voltage (V)	Notes
1	0.75	3600	145Y	00136ET3EPM143/5Y-W2	$565	Y1	42	1.25	1.44	81.5	12.110	230/460	
		1800	145Y	00118ET3EPM143/5Y-W2	$594	Y1	47	1.25	1.47	85.5	12.110	230/460	
1.5	1.1	3600	145Y	00156ET3EPM143/5Y-W2	$613	Y1	47	1.25	1.96	84.0	12.110	230/460	
		1800	145Y	00158ET3EPM143/5Y-W2	$617	Y1	52	1.25	2.02	86.5	12.110	230/460	
		1200	184Y	00152ET3EPM182/4Y-W2	$820	Y1	103	1.25	2.54	87.5	13.803	230/460	
2	1.5	3600	145Y	00236ET3EPM143/5Y-W2	$661	Y1	52	1.25	2.56	85.5	12.110	230/460	
		1800	145Y	00218ET3EPM143/5Y-W2	$685	Y1	52	1.25	2.76	86.5	12.110	230/460	
3	2.2	3600	184Y	00336ET3EPM182/4Y-W2	$847	Y1	104	1.25	3.63	86.5	13.803	230/460	
		1800	184Y	00318ET3EPM182/4Y-W2	$735	Y1	101	1.25	3.91	89.5	13.803	230/460	
5	3.7	3600	184Y	00536ET3EPM182/4Y-W2	$985	Y1	112	1.25	5.90	88.5	13.803	230/460	
		1800	184Y	00518ET3EPM182/4Y-W2	$855	Y1	110	1.25	6.45	89.5	13.803	230/460	
7.5	5.5	3600	215Y	00736ET3EPM213/5Y-W2	$1,248	Y1	162	1.25	8.76	89.5	17.198	230/460	39
		1800	215Y	00718ET3EPM213/5Y-W2	$1,240	Y1	170	1.25	9.18	91.7	17.198	230/460	
10	7.5	3600	215Y	01036ET3EPM213/5Y-W2	$1,477	Y1	185	1.25	11.6	90.2	17.198	230/460	
		1800	215Y	01018ET3EPM213/5Y-W2	$1,450	Y1	193	1.25	12.4	91.7	17.198	230/460	
15	11	1200	286Y	01512ET3EPM284/6Y-W2	$3,652	Y1	400	1.25	17.9	91.7	23.938	230/460	
20	15	1200	286Y	02012ET3EPM284/6Y-W2	$4,437	Y1	422	1.25	24.2	91.7	23.938	230/460	
25	18.5	1800	286Y	02518ET3EPM284/6Y-W2	$3,071	Y1	414	1.25	29.5	93.6	23.938	230/460	
		1200	326Y	02512ET3EPM324/6Y-W2	$5,353	Y1	591	1.25	30.4	93.0	26.658	230/460	
30	22	1800	286Y	03018ET3EPM284/6Y-W2	$3,610	Y1	452	1.25	35.1	93.6	23.938	230/460	
		1200	326Y	03012ET3EPM324/6Y-W2	$5,906	Y1	639	1.25	36.2	93.0	26.658	230/460	
40	30	1800	326Y	04018ET3EPM324/6Y-W2	$4,638	Y1	587	1.25	47.1	94.1	26.658	230/460	
50	37	1800	326Y	05018ET3EPM324/6Y-W2	$5,661	Y1	610	1.25	59.2	94.5	26.658	230/460	

Please refer to back cover for description of "NOTES"

For detailed specifications, data sheets, drawings and performance curves visit http:// www.weg.net

Data subject to change without notice.

Pump Motors

JET PUMP SINGLE-PHASE (56C/56J FRAMES)

TEFC – Foot Mount A-187
TEFC – Footless A-187
ODP – Foot Mount A-188
ODP – Footless A-188

JET PUMP THREE-PHASE (56C/56J FRAMES)

TEFC – Foot Mount A-189
TEFC – Footless A-189
ODP – Foot Mount A-190
ODP – Footless A-190

POOL & SPA SINGLE-PHASE MOTORS

ODP – C-Face – Start Capacitor – High Service Factor A-192
ODP – Square Face – Start Capacitor – High Service Factor A-192
ODP – C-Face – Start Capacitor – Low Service Factor A-193
ODP – Square Face – Start Capacitor – Low Service Factor A-193

CLOSE-COUPLED PUMP TEFC MOTORS

JM – TEFC – Single-Phase A-194
JP – TEFC – Single-Phase A-195
JM – TEFC – Three-Phase A-197
JP – TEFC – Three-Phase A-201
JP – TEFC – Explosion Proof A-204

CLOSE-COUPLED PUMP ODP MOTORS

JM – ODP – Single-Phase A-205
JP – ODP – Single-Phase A-205
JM – ODP – Three-Phase A-206
JM – ODP – Three-Phase – Footless Vertical A-209
JP – ODP – Three-Phase A-210
JP – ODP – Three-Phase – Footless Vertical A-213

CLOSE-COUPLED PUMP TEFC MOTORS - WITH INTERNAL AEGIS® SGR

JM – TEFC – Three-Phase A-215
JP – TEFC – Three-Phase A-216

CLOSE-COUPLED PUMP ODP MOTORS - WITH INTERNAL AEGIS® SGR

JM – ODP – Three-Phase A-217
JP – ODP – Three-Phase A-218

FIRE PUMP MOTORS

ODP – Three-Phase A-220
ODP – Three-Phase – C-Face A-222
ODP – Three-Phase – JM - Footless Vertical A-223
ODP – Three-Phase – JP - Footless Vertical A-224
TEFC (50Hz) – Three-Phase – IE2 . . . . . A-226

P-BASE MOTORS

TEFC – Three-Phase – NEMA Premium® A-228

Pump Motors

JET PUMP (56C/56J FRAMES)

These versatile motors have the torque and durability for the toughest commercial applications, yet are also economical choices for residential applications. Available with or without base and in “J” and “C” configurations

ODP Single Phase

ODP Three Phase

ODP & TEFC - Single Phase

- Insulation class B
- Sealed ball bearings (Drive end)
- NEMA Service factor

TEFC Single Phase

ODP & TEFC - Three Phase

- Insulation class B (ODP)
- Insulation class F (TEFC)
- NEMA Service factor

TEFC Three Phase

Features that make a difference:

ODP & TEFC - Single Phase

- Automatic Reset Thermal Overload Protector
- Stainless steel shaft end

ODP & TEFC - Three Phase

- Stainless steel shaft end

ADDITIONAL TECHNICAL DATA

CONTACT WEG OR VISIT WWW.WEG.NET

JET PUMP THREE-PHASE (56C/56J FRAMES)

TEFC - Foot Mount

HP	kW	RPM	Frame	Catalog Number	List Price	Mult. Symbol	Approx. Shipping Weight (lbs)	Service Factor	FL Amps @ High	FL. Eff (%)	"C" Dimension (in)	Voltage (V)	Notes
0.33	0.25	3600	W56C	**.3336ES1BJPW56C-S**	**$263**	P1A	24	1.15	2.60	54.0	11.106	115/208-230	3;9
		3600	W56J	**.3336ES1BJPW56J-S**	**$282**	P1B	22	1.15	2.60	54.0	11.606	115/208-230	3;9
0.5	0.37	3600	W56C	**.5036ES1BJPW56C-S**	**$284**	P1A	26	1.15	3.50	60.0	11.500	115/208-230	3;9
		3600	W56J	**.5036ES1BJPW56J-S**	**$300**	P1B	24	1.15	3.50	58.0	12.000	115/208-230	3;9
0.75	0.55	3600	56C	**.7536ES1BJP56C-S**	**$320**	P1A	29	1.15	4.00	66.0	12.720	115/208-230	3;9
		3600	56J	**.7536ES1BJP56J-S**	**$330**	P1B	29	1.15	4.00	64.0	13.220	115/208-230	3;9
1	0.75	3600	56C	**00136ES1BJP56C-S**	**$344**	P1A	32	1.15	5.10	70.0	13.114	115/208-230	3;9
		3600	56J	**00136ES1BJP56J-S**	**$374**	P1B	33	1.15	5.10	67.0	13.614	115/208-230	3;9
1.5	1.1	3600	56C	**00156ES1BJP56C-S**	**$412**	P1A	37	1.15	6.60	75.0	13.902	115/208-230	3;9
		3600	56J	**00156ES1BJP56J-S**	**$425**	P1B	37	1.15	6.60	70.0	14.402	115/208-230	3;9
2	1.5	3600	56HC	**00236ES1BJP56C-S**	**$487**	P1A	42	1.15	8.70	74.0	14.295	115/208-230	3;9
		3600	56HJ	**00236ES1BJP56J-S**	**$486**	P1B	42	1.15	8.70	74.0	14.795	115/208-230	3;9
3	2.2	3600	56HC	**00336ES1DJP56C-S**	**$548**	P1A	51	1.15	12.7	80.0	15.476	230	3;9
		3600	56HJ	**00336ES1DJP56J-S**	**$557**	P1B	53	1.15	12.7	80.0	15.976	230	3;9

TEFC - Footless

HP	kW	RPM	Frame	Catalog Number	List Price	Mult. Symbol	Approx. Shipping Weight (lbs)	Service Factor	FL Amps @ High	FL. Eff (%)	"C" Dimension (in)	Voltage (V)	Notes
0.33	0.25	3600	W56C	**.3336ES1BJPRW56C-S**	**$282**	P1A	24	1.15	2.60	54.0	11.106	115/208-230	3;9;20
		3600	W56J	**.3336ES1BJPRW56J-S**	**$296**	P1B	21	1.15	2.60	54.0	11.606	115/208-230	3;9;20
0.5	0.37	3600	W56C	**.5036ES1BJPRW56C-S**	**$299**	P1A	26	1.15	3.50	60.0	11.500	115/208-230	3;9;20
		3600	W56J	**.5036ES1BJPRW56J-S**	**$305**	P1B	24	1.15	3.50	60.0	12.000	115/208-230	3;9;20
0.75	0.55	3600	56C	**.7536ES1BJPR56C-S**	**$341**	P1A	29	1.15	4.00	66.0	12.720	115/208-230	3;9;20
		3600	56J	**.7536ES1BJPR56J-S**	**$336**	P1B	29	1.15	4.00	64.0	13.220	115/208-230	3;9;20
1	0.75	3600	56C	**00136ES1BJPR56C-S**	**$357**	P1A	32	1.15	5.10	70.0	13.114	115/208-230	3;9;20
		3600	56J	**00136ES1BJPR56J-S**	**$386**	P1B	32	1.15	5.10	67.0	13.614	115/208-230	3;9;20
1.5	1.1	3600	56C	**00156ES1BJPR56C-S**	**$432**	P1A	37	1.15	6.60	75.0	13.902	115/208-230	3;9;20
		3600	56J	**00156ES1BJPR56J-S**	**$438**	P1B	37	1.15	6.60	75.0	14.402	115/208-230	3;9;20
2	1.5	3600	56C	**00236ES1BJPR56C-S**	**$494**	P1A	42	1.15	8.70	77.0	14.295	115/208-230	3;9;20
		3600	56J	**00236ES1BJPR56J-S**	**$498**	P1B	41	1.15	8.70	77.0	14.795	115/208-230	3;9;20
3	2.2	3600	56C	**00336ES1DJPR56C-S**	**$555**	P1A	51	1.15	12.7	80.0	15.476	230	3;9;20
		3600	56J	**00336ES1DJPR56J-S**	**$573**	P1B	53	1.15	12.7	80.0	15.976	230	3;9;20

Please refer to back cover for description of "NOTES"

For detailed specifications, data sheets, drawings and performance curves visit http://www.weg.net

Pump Motors

JET PUMP SINGLE-PHASE (56C/56J FRAMES)

ODP - Foot Mount

HP	kW	RPM	Frame	Catalog Number	List Price	Mult. Symbol	Approx. Shipping Weight (lbs)	Service Factor	FL Amps @ High	FL. Eff (%)	"C" Dimension (in)	Voltage (V)	Notes
0.33	0.25	3600	W56J	**.33360S1BJPW56J-S**	**$254**	P1B	19	1.75	2.50	59.0	10.366	115/208-230	3;9
0.5	0.37	3600	W56J	**.50360S1BJPW56J-S**	**$258**	P1B	22	1.60	3.30	65.0	10.760	115/208-230	3;9
0.75	0.55	3600	W56J	**.75360S1BJPW56J-S**	**$296**	P1B	25	1.50	4.80	68.3	11.154	115/208-230	3;9
1	0.75	3600	56J	**001360S1BJP56J-S**	**$334**	P1B	29	1.40	6.40	68.0	12.008	115/208-230	3;9
1.5	1.1	3600	56J	**001560S1BJP56J-S**	**$382**	P1B	33	1.30	8.60	72.0	12.402	115/208-230	3;9
2	1.5	3600	56J	**002360S1BJP56J-S**	**$438**	P1B	41	1.20	10.9	75.0	13.189	115/208-230	3;9
3	2.2	3600	56J	**003360S1DJP56J-S**	**$499**	P1B	46	1.15	13.2	78.0	13.976	230	3;9

ODP - Footless

HP	kW	RPM	Frame	Catalog Number	List Price	Mult. Symbol	Approx. Shipping Weight (lbs)	Service Factor	FL Amps @ High	FL. Eff (%)	"C" Dimension (in)	Voltage (V)	Notes
0.33	0.25	3600	W56C	**.33360S1BJPRW56C-S**	**$237**	P1A	19	1.75	2.50	59.0	9.866	115/208-230	3;9;20
		3600	W56J	**.33360S1BJPRW56J-S**	**$255**	P1B	19	1.75	2.50	59.0	10.366	115/208-230	3;9;20
0.5	0.37	3600	W56C	**.50360S1BJPRW56C-S**	**$255**	P1A	21	1.60	3.30	65.0	10.260	115/208-230	3;9;20
		3600	W56J	**.50360S1BJPRW56J-S**	**$258**	P1B	21	1.60	3.30	65.0	10.760	115/208-230	3;9;20
0.75	0.55	3600	W56C	**.75360S1BJPRW56C-S**	**$297**	P1A	24	1.50	4.80	67.0	10.654	115/208-230	3;9;20
		3600	W56J	**.75360S1BJPRW56J-S**	**$296**	P1B	24	1.50	4.80	68.3	11.154	115/208-230	3;9;20
1	0.75	3600	56C	**001360S1BJPR56C-S**	**$317**	P1A	32	1.40	6.40	68.0	11.496	115/208-230	3;9;20
		3600	56J	**001360S1BJPR56J-S**	**$334**	P1B	29	1.40	6.40	66.3	12.008	115/208-230	3;9;20
1.5	1.1	3600	56C	**001560S1BJPR56C-S**	**$338**	P1A	36	1.30	8.60	72.0	11.890	115/208-230	3;9;20
		3600	56J	**001560S1BJPR56J-S**	**$382**	P1B	33	1.30	8.60	73.2	12.402	115/208-230	3;9;20
2	1.5	3600	56C	**002360S1BJPR56C-S**	**$424**	P1A	40	1.20	10.9	75.0	12.677	115/208-230	3;9;20
		3600	56J	**002360S1BJPR56J-S**	**$438**	P1B	40	1.20	10.9	75.0	13.189	115/208-230	3;9;20
3	2.2	3600	56C	**003360S1DJPR56C-S**	**$482**	P1A	45	1.15	13.2	77.1	13.465	230	3;9;20
		3600	56J	**003360S1DJPR56J-S**	**$499**	P1B	45	1.15	13.2	77.1	13.976	230	3;9;20

Please refer to back cover for description of "NOTES"

For detailed specifications, data sheets, drawings and performance curves visit http://www.weg.net

Data subject to change without notice.

JET PUMP THREE-PHASE (56C/56J FRAMES)

TEFC - Foot Mount

HP	kW	RPM	Frame	Catalog Number	List Price	Mult. Symbol	Approx. Shipping Weight (lbs)	Service Factor	FL Amps @ High	FL. Eff (%)	"C" Dimension (in)	Voltage (V)	Notes
0.33	0.25	3600	56J	.3336ES3EJP56J-S	$259	P1B	24	1.15	0.60	62.0	11.654	208-230/460	9
0.5	0.37	3600	56J	.5036ES3EJP56J-S	$267	P1B	26	1.15	0.80	68.0	12.047	208-230/460	9
0.75	0.55	3600	56J	.7536ES3EJP56J-S	$301	P1B	27	1.15	1.10	72.0	12.047	208-230/460	9
		3600	56J	.7536ES3HJP56J-S	$301	P1B	27	1.15	0.90	72.0	12.047	575	9
1	0.75	3600	W56J	00136ET3EJPW56J-S	$434	P1B	25	1.15	1.50	78.5	11.606	230/460	9
		3600	W56J	00136ET3HJPW56J-S	$434	P1B	25	1.15	1.20	78.5	11.606	575	9
1.5	1.1	3600	56J	00156ET3EJP56J-S	$473	P1B	41	1.15	1.90	84.0	13.614	230/460	9
		3600	56J	00156ET3HJP56J-S	$473	P1B	41	1.15	1.50	84.0	13.614	575	9
2	1.5	3600	56J	00236ET3EJP56J-S	$535	P1B	46	1.15	2.50	85.5	14.402	230/460	9
		3600	56J	00236ET3HJP56J-S	$535	P1B	46	1.15	2.00	85.5	14.402	575	9
3	2.2	3600	56J	00336ET3EJP56J-S	$634	P1B	55	1.15	3.50	86.5	15.583	230/460	9
		3600	56J	00336ET3HJP56J-S	$634	P1B	55	1.15	2.80	86.5	15.583	575	9

TEFC - Footless

HP	kW	RPM	Frame	Catalog Number	List Price	Mult. Symbol	Approx. Shipping Weight (lbs)	Service Factor	FL Amps @ High	FL. Eff (%)	"C" Dimension (in)	Voltage (V)	Notes
0.33	0.25	3600	56C	.3336ES3EJPR56C-S	$257	P1A	24	1.15	0.60	62.0	11.142	208-230/460	9;20
		3600	56J	.3336ES3EJPR56J-S	$268	P1B	24	1.15	0.60	62.0	11.654	208-230/460	9;20
0.5	0.37	3600	56C	.5036ES3EJPR56C-S	$270	P1A	26	1.15	0.80	68.0	11.535	208-230/460	9;20
		3600	56J	.5036ES3EJPR56J-S	$282	P1B	26	1.15	0.80	68.0	12.047	208-230/460	9;20
0.75	0.55	3600	56C	.7536ES3EJPR56C-S	$293	P1A	27	1.15	1.10	72.0	11.535	208-230/460	9;20
		3600	56J	.7536ES3EJPR56J-S	$319	P1B	27	1.15	1.10	72.0	12.047	208-230/460	9;20
1	0.75	3600	W56C	00136ET3EJPRW56C-S	$425	P1A	25	1.15	1.50	78.5	11.106	230/460	9;20
		3600	W56J	00136ET3EJPRW56J-S	$429	P1B	25	1.15	1.50	78.5	11.606	230/460	9;20
1.5	1.1	3600	56C	00156ET3EJPR56C-S	$455	P1A	39	1.15	1.90	84.0	13.114	230/460	9;20
		3600	56J	00156ET3EJPR56J-S	$468	P1B	41	1.15	1.90	84.0	13.614	230/460	9;20
		3600	56J	00156ET3HJPR56J-S	$468	P1B	41	1.15	1.50	84.0	13.614	575	9;20
2	1.5	3600	56C	00236ET3EJPR56C-S	$490	P1A	46	1.15	2.50	85.5	13.901	230/460	9;20
		3600	56J	00236ET3EJPR56J-S	$525	P1B	46	1.15	2.50	85.5	14.402	230/460	9;20
		3600	56J	00236ET3HJPR56J-S	$525	P1B	46	1.15	2.00	85.5	14.402	575	9;20
3	2.2	3600	56C	00336ET3EJPR56C-S	$602	P1A	55	1.15	3.50	86.5	15.083	230/460	9;20
		3600	56J	00336ET3EJPR56J-S	$624	P1B	55	1.15	3.50	86.5	15.583	230/460	9;20

Please refer to back cover for description of "NOTES"

For detailed specifications, data sheets, drawings and performance curves visit http://www.weg.net

Pump Motors

JET PUMP THREE-PHASE (56C/56J FRAMES)

ODP - Foot Mount

HP	kW	RPM	Frame	Catalog Number	List Price	Mult. Symbol	Approx. Shipping Weight (lbs)	Service Factor	FL Amps @ High	FL. Eff (%)	"C" Dimension (in)	Voltage (V)	Notes
0.33	0.25	3600	56J	**.33360S3EJP56J-S**	**$224**	P1B	21	1.75	0.60	68.0	10.827	208-230/460	9
0.5	0.37	3600	56J	**.50360S3EJP56J-S**	**$236**	P1B	21	1.60	0.90	68.0	10.827	208-230/460	9
		3600	56J	**.50360S3HJP56J-S**	**$236**	P1B	21	1.60	0.70	70.0	10.827	575	9
0.75	0.55	3600	56J	**.75360S3EJP56J-S**	**$271**	P1B	24	1.50	1.20	72.0	11.220	208-230/460	9
		3600	56J	**.75360S3HJP56J-S**	**$271**	P1B	24	1.50	1.00	72.0	11.220	575	9
1	0.75	3600	56J	**001360S3EJP56J-S**	**$286**	P1B	25	1.40	1.50	74.0	11.220	208-230/460	9
		3600	56J	**001360S3HJP56J-S**	**$286**	P1B	25	1.40	1.20	75.5	11.220	575	9
1.5	1.1	3600	56J	**001560S3EJP56J-S**	**$296**	P1B	28	1.30	2.10	77.0	11.614	208-230/460	9
		3600	56J	**001560S3HJP56J-S**	**$296**	P1B	28	1.30	1.70	77.0	11.614	575	9
2	1.5	3600	56HJ	**002360S3EJP56J-S**	**$316**	P1B	32	1.20	2.80	78.5	12.008	208-230/460	9
		3600	56HJ	**002360S3HJP56J-S**	**$316**	P1B	32	1.20	2.30	78.5	12.008	575	9
3	2.2	3600	56HJ	**003360S3EJP56J-S**	**$339**	P1B	38	1.15	3.90	81.5	12.795	208-230/460	9
		3600	56HJ	**003360S3HJP56J-S**	**$339**	P1B	38	1.15	3.10	81.5	12.795	575	9

ODP - Footless

HP	kW	RPM	Frame	Catalog Number	List Price	Mult. Symbol	Approx. Shipping Weight (lbs)	Service Factor	FL Amps @ High	FL. Eff (%)	"C" Dimension (in)	Voltage (V)	Notes
0.33	0.25	3600	56C	**.33360S3EJPR56C-S**	**$220**	P1A	22	1.75	0.60	68.0	10.315	208-230/460	9;20
		3600	56J	**.33360S3EJPR56J-S**	**$229**	P1B	21	1.75	0.60	66.0	10.827	208-230/460	9;20
0.5	0.37	3600	56C	**.50360S3EJPR56C-S**	**$224**	P1A	29	1.60	0.90	70.0	10.315	208-230/460	9;20
		3600	56J	**.50360S3EJPR56J-S**	**$241**	P1B	21	1.60	0.90	68.0	10.827	208-230/460	9;20
0.75	0.55	3600	56C	**.75360S3EJPR56C-S**	**$257**	P1A	24	1.5	1.2	70	10.709	208-230/460	9;20
		3600	56J	**.75360S3EJPR56J-S**	**$278**	P1B	24	1.5	1.2	72	11.22	208-230/460	9;20
		3600	56C	**.75360S3HJPR56C-S**	**$257**	P1A	24	1.5	1	70	10.709	575	9;20
		3600	56J	**.75360S3HJPR56J-S**	**$277**	P1B	24	1.50	1.00	70.0	11.220	575	9;20
1	0.75	3600	56C	**001360S3EJPR56C-S**	**$274**	P1A	25	1.40	1.50	75.5	10.709	208-230/460	9;20
		3600	56J	**001360S3EJPR56J-S**	**$287**	P1B	25	1.40	1.50	74.0	11.220	208-230/460	9;20
1.5	1.1	3600	56C	**001560S3EJPR56C-S**	**$290**	P1A	28	1.30	2.10	77.0	11.102	208-230/460	9;20
		3600	56J	**001560S3EJPR56J-S**	**$305**	P1B	28	1.30	2.10	77.0	11.614	208-230/460	9;20
		3600	56C	**001560S3HJPR56C-S**	**$290**	P1A	28	1.30	1.70	77.0	11.102	575	9;20
2	1.5	3600	56C	**002360S3EJPR56C-S**	**$311**	P1A	30	1.20	2.80	78.5	11.496	208-230/460	9;20
		3600	56J	**002360S3EJPR56J-S**	**$321**	P1B	32	1.20	2.80	78.5	12.008	208-230/460	9;20
		3600	56C	**002360S3HJPR56C-S**	**$311**	P1A	30	1.20	2.30	78.5	11.496	575	9;20
		3600	56J	**002360S3HJPR56J-S**	**$321**	P1B	32	1.20	2.30	78.5	12.008	575	9;20
3	2.2	3600	56C	**003360S3EJPR56C-S**	**$332**	P1A	35	1.15	3.90	81.5	12.283	208-230/460	9;20
		3600	56J	**003360S3EJPR56J-S**	**$350**	P1B	38	1.15	3.90	81.5	12.795	208-230/460	9;20

Please refer to back cover for description of "NOTES"

For detailed specifications, data sheets, drawings and performance curves visit http:// www.weg.net

Data subject to change without notice.

Pump Motors

POOL & SPA MOTORS

ODP

These motors are specially designed for pool duty. Available in high and low Service Factor.

C-Face

Square Face

Standard Features:

- C-Face is cast iron; square flange is aluminum
- Class B insulation

Features that make a difference:

- Dual compartment for easy maintenance
- Rated for 50 degrees Celsius ambient temperature
- Stainless steel shaft (AISI 316)
- Automatic Reset thermal overload protection
- Threaded shaft
- Internal and external grounding
- Terminal box threaded NPT 1/2”
- Sealed bearings
- Drive endshield sealing (V’ring for C-face, Lip Seal for Square flange)
- Epoxy coating

ADDITIONAL TECHNICAL DATA

CONTACT WEG OR VISIT WWW.WEG.NET

ODP - C-Face - Start Capacitor - High Service Factor

HP	kW	RPM	Frame	Catalog Number	List Price	Mult. Symbol	Approx. Shipping Weight (lbs)	Service Factor	FL Amps @ High	FL. Eff (%)	"C" Dimension (in)	Voltage (V)	Notes
0.50	0.37	3600	K56J	PCJ105H	$236	P1D	23	1.60	4.55	60.4	13.898	115/230	3;9;20
0.75	0.55	3600	K56J	PCJ107H	$263	P1D	27	1.50	5.60	65.8	13.898	115/230	3;9;20
1	0.75	3600	L56J	PCJ110H	$300	P1D	30	1.40	7.05	69.7	14.488	115/230	3;9;20
1.5	1.1	3600	M56J	PCJ115H	$400	P1D	33	1.30	7.50	76.3	15.079	230	3;9;20
2	1.5	3600	M56J	PCJ120H	$486	P1D	34	1.20	9.20	78.3	15.079	230	3;9;20

ODP - Square Face - Start Capacitor - High Service Factor

HP	kW	RPM	Frame	Catalog Number	List Price	Mult. Symbol	Approx. Shipping Weight (lbs)	Service Factor	FL Amps @ High	FL. Eff (%)	"C" Dimension (in)	Voltage (V)	Notes
0.33	0.25	3600	K48Y	PCQ103H	$231	P1D	20	1.95	3.45	55.0	12.913	115/230	3;9;20
0.50	0.37	3600	K48Y	PCQ105H	$241	P1D	22	1.90	4.55	60.4	12.913	115/230	3;9;20
0.75	0.55	3600	K48Y	PCQ107H	$275	P1D	26	1.65	5.60	65.8	12.913	115/230	3;9;20
1	0.75	3600	L48Y	PCQ110H	$320	P1D	29	1.65	7.05	69.7	13.504	115/230	3;9;20
1.5	1.1	3600	M48Y	PCQ115H	$411	P1D	32	1.50	7.50	76.3	14.094	230	3;9;20
2	1.5	3600	M48Y	PCQ120H	$500	P1D	33	1.30	9.20	78.3	14.094	230	3;9;20

Please refer to back cover for description of "NOTES"

For detailed specifications, data sheets, drawings and performance curves visit http:// www.weg.net

Data subject to change without notice.

ODP - C-Face - Start Capacitor - Low Service Factor

HP	kW	RPM	Frame	Catalog Number	List Price	Mult. Symbol	Approx. Shipping Weight (lbs)	Service Factor	FL Amps @ High	FL. Eff (%)	"C" Dimension (in)	Voltage (V)	Notes
0.75	0.55	3600	K56J	PCJ107	$236	P1D	23	1.30	5.10	66.2	13.898	115/230	3;9;20
1	0.75	3600	K56J	PCJ110	$263	P1D	26	1.25	6.25	70.1	13.898	115/230	3;9;20
1.5	1.1	3600	L56J	PCJ115	$300	P1D	30	1.10	8.85	69.6	14.488	115/230	3;9;20
2	1.5	3600	M56J	PCJ120	$400	P1D	33	1.10	9.30	76.6	15.079	230	3;9;20
2.5	1.9	3600	M56J	PCJ125	$486	P1D	34	1.04	10.8	80.7	15.079	230	3;9;20

ODP - Square Face - Start Capacitor - Low Service Factor

HP	kW	RPM	Frame	Catalog Number	List Price	Mult. Symbol	Approx. Shipping Weight (lbs)	Service Factor	FL Amps @ High	FL. Eff (%)	"C" Dimension (in)	Voltage (V)	Notes
0.50	0.37	3600	K48Y	PCQ105	$231	P1D	20	1.30	3.75	61.8	12.913	115/230	3;9;20
0.75	0.55	3600	K48Y	PCQ107	$241	P1D	22	1.30	5.10	66.2	12.913	115/230	3;9;20
1	0.75	3600	K48Y	PCQ110	$275	P1D	26	1.25	6.25	70.1	12.913	115/230	3;9;20
1.5	1.1	3600	L48Y	PCQ115	$320	P1D	29	1.10	8.85	69.6	13.504	115/230	3;9;20
2	1.5	3600	M48Y	PCQ120	$411	P1D	32	1.10	9.30	76.6	14.094	230	3;9;20
2.5	1.9	3600	M48Y	PCQ125	$500	P1D	33	1.04	10.8	80.7	14.094	230	3;9;20

Please refer to back cover for description of "NOTES"

For detailed specifications, data sheets, drawings and performance curves visit http://catalog.wegelectric.com

Pump Motors

CLOSE-COUPLED PUMP TEFC MOTORS

JM - TEFC - Single-Phase

HP	kW	RPM	Frame	Catalog Number	List Price	Mult. Symbol	Approx. Shipping Weight (lbs)	Service Factor	FL Amps @ High	FL. Eff (%)	"C" Dimension (in)	Voltage (V)	Notes
0.5	0.37	3600	143JM	**.5036ES1E143JM**	**$668**	P1	26	1.15	1.90	60.0	15.866	208-230/460	
1	0.75	3600	143JM	**00136ES1E143JM**	**$682**	P1	53	1.15	3.15	67.0	15.866	208-230/460	
		1800	143JM	**00118ES1E143JM**	**$687**	P1	60	1.15	2.65	75.0	15.866	208-230/460	
1.5	1.1	3600	143JM	**00156ES1E143JM**	**$729**	P1	56	1.15	3.90	73.0	15.866	208-230/460	
		1800	145JM	**00158ES1E145JM**	**$754**	P1	67	1.15	3.60	77.0	16.458	208-230/460	
2	1.5	3600	145JM	**00236ES1E145JM**	**$770**	P1	61	1.15	4.90	79.0	16.458	208-230/460	
		1800	145JM	**00218ES1E145JM**	**$814**	P1	67	1.15	4.60	78.0	16.458	208-230/460	
3	2.2	3600	145JM	**00336ES1E145JM**	**$1,076**	P1	70	1.15	6.75	79.0	16.458	208-230/460	
		3600	145JM	**00336ES1C145JM**	**$1,076**	P1	70	1.15	13.5	79.0	16.458	208-230	
		3600	145JM	**00336ES1B145JM**	**$1,076**	P1	61	1.15	13.5	79.0	16.458	115/208-230	
		1800	184JM	**00318ES1E184JM**	**$1,182**	P1	101	1.15	6.80	77.0	17.368	208-230/460	
		1800	184JM	**00318ES1B184JM**	**$1,182**	P1	100	1.15	13.6	77.0	17.368	115/208-230	
5	3.7	3600	184JM	**00536ES1E184JM**	**$1,457**	P1	110	1.15	10.5	83.0	17.368	208-230/460	
		3600	184JM	**00536ES1C184JM**	**$1,457**	P1	111	1.15	21.0	83.0	17.368	208-230	
		3600	184JM	**00536ES1B184JM**	**$1,457**	P1	111	1.15	21.0	83.0	17.368	115/208-230	
		1800	184JM	**00518ES1E184JM**	**$1,430**	P1	121	1.15	10.7	79.0	17.368	208-230/460	
		1800	184JM	**00518ES1B184JM**	**$1,430**	P1	120	1.15	21.4	79.0	17.368	115/208-230	
7.5	5.5	3600	213JM	**00736ES1E213JM**	**$1,641**	P1	153	1.15	14.9	86.0	18.904	208-230/460	
		3600	213JM	**00736ES1C213JM**	**$1,641**	P1	153	1.15	29.8	86.0	18.904	208-230	
		1800	215JM	**00718ES1E215JM**	**$1,762**	P1	168	1.15	17.0	83.0	20.400	208-230/460	
		1800	215JM	**00718ES1C215JM**	**$1,766**	P1	168	1.15	34.0	83.0	20.400	208-230	
10	7.5	3600	215JM	**01036ES1E215JM**	**$2,172**	P1	167	1.15	19.4	86.0	20.400	208-230/460	
		3600	215JM	**01036ES1C215JM**	**$2,172**	P1	167	1.15	38.8	86.0	20.400	208-230	
		1800	215JM	**01018ES1E215JM**	**$2,057**	P1	193	1.15	19.5	84.0	20.400	208-230/460	
		1800	215JM	**01018ES1C215JM**	**$2,057**	P1	193	1.15	39.0	84.0	20.400	208-230	

Please refer to back cover for description of "NOTES"

For detailed specifications, data sheets, drawings and performance curves visit http://www.weg.net

Data subject to change without notice.

JP - TEFC - Single-Phase

HP	kW	RPM	Frame	Catalog Number	List Price	Mult. Symbol	Approx. Shipping Weight (lbs)	Service Factor	FL Amps @ High	FL. Eff (%)	"C" Dimension (in)	Voltage (V)	Notes
0.5	0.37	3600	143JP	**.5036ES1E143JP**	**$668**	P1	26	1.15	1.90	60.0	18.519	208-230/460	
1	0.75	1800	143JP	**00118ES1E143JP**	**$687**	P1	61	1.15	2.65	75.0	18.519	208-230/460	
1.5	1.1	3600	143JP	**00156ES1E143JP**	**$729**	P1	37	1.15	3.90	73.0	18.519	208-230/460	
		1800	145JP	**00158ES1E145JP**	**$754**	P1	49	1.15	3.60	77.0	19.519	208-230/460	
2	1.5	3600	145JP	**00236ES1E145JP**	**$770**	P1	45	1.15	4.90	79.0	19.519	208-230/460	
		1800	145JP	**00218ES1E145JP**	**$814**	P1	54	1.15	4.60	78.0	19.519	208-230/460	
3	2.2	3600	145JP	**00336ES1E145JP**	**$1,076**	P1	71	1.15	6.75	79.0	19.519	208-230/460	
		3600	145JP	**00336ES1B145JP**	**$1,076**	P1	62	1.15	13.5	79.0	19.519	115/208-230	
		1800	184JP	**00318ES1E184JP**	**$1,182**	P1	131	1.15	6.80	77.0	20.429	208-230/460	
		1800	184JP	**00318ES1B184JP**	**$1,182**	P1	131	1.15	13.6	77.0	20.429	115/208-230	
5	3.7	3600	184JP	**00536ES1E184JP**	**$1,457**	P1	117	1.15	10.5	83.0	20.429	208-230/460	
		3600	184JP	**00536ES1B184JP**	**$1,457**	P1	116	1.15	21.0	83.0	20.429	115/208-230	
		1800	184JP	**00518ES1E184JP**	**$1,430**	P1	153	1.15	10.7	79.0	20.429	208-230/460	
		1800	184JP	**00518ES1B184JP**	**$1,430**	P1	153	1.15	21.4	79.0	20.429	115/208-230	
7.5	5.5	3600	213JP	**00736ES1E213JP**	**$1,641**	P1	163	1.15	14.9	86.0	22.776	208-230/460	
		3600	213JP	**00736ES1C213JP**	**$1,641**	P1	163	1.15	29.8	86.0	22.776	208-230	
		1800	215JP	**00718ES1E215JP**	**$1,762**	P1	179	1.15	17.0	83.0	24.272	208-230/460	
10	7.5	3600	215JP	**01036ES1E215JP**	**$2,172**	P1	177	1.15	19.4	86.0	24.272	208-230/460	
		3600	215JP	**01036ES1C215JP**	**$2,172**	P1	177	1.15	38.8	86.0	24.272	208-230	
		1800	215JP	**01018ES1E215JP**	**$2,057**	P1	203	1.15	19.5	84.0	24.272	208-230/460	

Please refer to back cover for description of "NOTES"

For detailed specifications, data sheets, drawings and performance curves visit http://www.weg.net

Pump Motors

CLOSE-COUPLED PUMP MOTORS

Inverter Rated: 1000 : 1 for variable torque

ODP - Three Phase

WEG Open Drip Proof motors are designed to meet demanding applications in environments where dirt and humidity are minimal. These motors are specifically designed to provide maximum ventilation and heat dissipation.

Features that make a difference:

- For rolled steel motors: 50/60 Hz rated (380V on Nameplate - 400/415 Available - Same Horse Power at 50 Hz with a 1.0 Service Factor)
- For W40 - cast iron motors: Nameplated 50 Hz at reduced HP IE3 efficiency and CE mark
- Class F insulation (Impregnation Resin and Magnet wire are class H)
- F1 Mounted (Cast Iron Frame motors are F2 convertible)
- Stainless Steel Nameplate - Laser etched with high contrast background (Cast Iron Frame only)
- Regreasable ball bearings (Frames 254JM/JP and up)
- Aegis Ring™ inside available

TEFC - Three Phase

High performance with maximum energy efficiency, this is the meaning of the new WEG electric motor. High efficiency and Low cost of Ownership throughout the entire motor lifetime have been the basis for the W22 development. A design created to anticipate concepts on performance and energy savings.

WEG's W22 cast iron platform has an improved cooling system and solid feet for cooler operation and reduced vibration and noise extending the life of the motor.

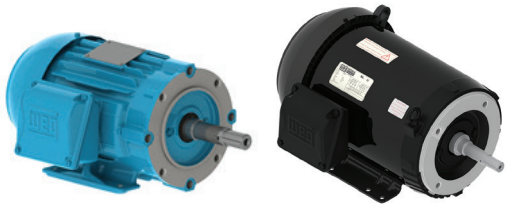

Inverter Rated: 1000 : 1 for variable torque

Standard Features:

- 50/60 Hz rated (380V on Nameplate - 400/415 Available - Same Horse Power at 50 Hz with a 1.0 Service Factor)
- Class F insulation (Impregnation Resin and Magnet wire are class H)
- F1 Mounted (Cast Iron frames are F2 convertible)
- Stainless Steel Nameplate - Laser etched with high contrast background (cast iron fram only)
- Regreasable ball bearings (Frames 254JM/JP and up)
- Gasketed conduit box
- Class I, Div. 2, Groups A, B, C & D – T3, Class II, Div 2, Groups F & G – T3C

Features that make a difference:

- 1.25 Service Factor
- Optimized ventilation system for cooler operation and reduced noise levels
- Solid base for reduced vibration levels
- NPT Threaded terminal box
- Aegis Ring™ inside available

ADDITIONAL TECHNICAL DATA

ELECTRICAL DATA:	TEFC Rolled Steel B-32 & B-35
	TEFC W22 - B-33 & B-36
	ODP RS - B-38 & B-40
	ODP W40 Cast Iron - B-39 & B-41
MECHANICAL DATA:	TEFC RS - B-93 & B-98
	TEFC W22 - B-95 & B-100
	ODP RS - B-103
	ODP W40 Cast Iron - ????

Please refer to back cover for description of "NOTES"

For detailed specifications, data sheets, drawings and performance curves visit http://www.weg.net

Data subject to change without notice.

JM - TEFC - Three-Phase

HP	kW	RPM	Frame	Catalog Number	List Price	Mult. Symbol	Approx. Shipping Weight (lbs)	Service Factor	FL Amps @ High	FL. Eff (%)	"C" Dimension (in)	Voltage (V)	Notes
1	0.75	1800	143/5JM	00118ET3E143JM-S	$613	P1S	45	1.15	1.50	85.5	16.102	230/460	9
		1800	143/5JM	00118ET3H143JM-S	$613	P1S	45	1.15	1.20	85.5	16.102	575	9
		1800	143/5JM	00118ET3V143JM-S	$613	P1S	45	1.15	1.70	85.5	16.102	200/400	9
		1800	143/5JM	00118ET3E143JM-W22	$613	P1	55	1.25	1.47	85.5	15.675	230/460	
		1800	143/5JM	00118ET3H143JM-W22	$613	P1	55	1.25	1.18	85.5	15.675	575	
		1200	143/5JM	00112ET3E145JM-S	$700	P1S	45	1.15	1.60	82.5	16.102	230/460	9
		1200	143/5JM	00112ET3E145JM-W22	$700	P1	62	1.25	1.73	82.5	15.675	230/460	
1.5	1.1	3600	143/5JM	00156ET3E143JM-S	$710	P1S	41	1.15	1.90	84.0	15.709	230/460	9
		3600	143/5JM	00156ET3E143JM-W22	$710	P1	57	1.25	1.96	84.0	15.675	230/460	
		1800	143/5JM	00158ET3E145JM-S	$643	P1S	47	1.15	2.00	86.5	16.102	230/460	9
		1800	143/5JM	00158ET3H145JM-S	$643	P1S	47	1.15	1.60	86.5	16.102	575	9
		1800	143/5JM	00158ET3V145JM-S	$643	P1S	47	1.15	2.30	86.5	16.102	200/400	9
		1800	143/5JM	00158ET3E145JM-W22	$643	P1	61	1.25	2.02	86.5	15.675	230/460	
		1800	143/5JM	00158ET3H145JM-W22	$643	P1	61	1.25	1.62	86.5	15.675	575	
		1200	182/4JM	00152ET3E182JM-S	$909	P1S	84	1.15	2.20	87.5	17.835	230/460	9
		1200	182/4JM	00152ET3E182JM-W22	$909	P1	99	1.25	2.54	87.5	17.411	230/460	
2	1.5	3600	143/5JM	00236ET3E145JM-S	$683	P1S	47	1.15	2.50	85.5	16.496	230/460	9
		3600	143/5JM	00236ET3H145JM-S	$683	P1S	47	1.15	2.00	85.5	16.496	575	9
		3600	143/5JM	00236ET3V145JM-S	$683	P1S	47	1.15	2.80	85.5	16.496	200/400	9
		3600	143/5JM	00236ET3E145JM-W22	$683	P1	61	1.25	2.56	85.5	15.675	230/460	
		3600	143/5JM	00236ET3H145JM-W22	$683	P1	58	1.25	2.05	85.5	15.675	575	
		1800	143/5JM	00218ET3E145JM-S	$707	P1S	50	1.15	2.70	86.5	16.496	230/460	9
		1800	143/5JM	00218ET3H145JM-S	$707	P1S	50	1.15	2.20	86.5	16.496	575	9
		1800	143/5JM	00218ET3V145JM-S	$707	P1S	50	1.15	3.10	86.5	16.496	200/400	9
		1800	143/5JM	00218ET3E145JM-W22	$707	P1	62	1.25	2.76	86.5	15.675	230/460	
		1800	143/5JM	00218ET3H145JM-W22	$707	P1	62	1.25	2.21	86.5	15.675	575	
		1200	182/4JM	00212ET3E184JM-S	$1,021	P1S	97	1.15	3.00	88.5	18.622	230/460	9
		1200	182/4JM	00212ET3E184JM-W22	$1,021	P1	105	1.25	3.23	88.5	17.411	230/460	39
3	2.2	3600	143/5JM	00336ET3E145JM-S	$897	P1S	56	1.15	3.50	86.5	17.677	230/460	9;12
		3600	143/5JM	00336ET3H145JM-S	$897	P1S	56	1.15	2.80	86.5	17.677	575	9;12
		3600	182/4JM	00336ET3E182JM-S	$918	P1S	81	1.15	3.70	86.5	17.835	230/460	9
		3600	182/4JM	00336ET3H182JM-S	$918	P1S	81	1.15	2.90	86.5	17.835	575	9
		3600	143/5JM	00336ET3E145JM-W22	$764	P1	60	1.25	3.71	86.5	15.675	230/460	12
		3600	143/5JM	00336ET3H145JM-W22	$764	P1	60	1.25	2.97	86.5	15.675	575	12
		3600	182/4JM	00336ET3E182JM-W22	$918	P1	101	1.25	3.63	86.5	17.411	230/460	
		3600	182/4JM	00336ET3H182JM-W22	$918	P1	101	1.25	2.90	86.5	17.411	575	
		1800	182/4JM	00318ET3E182JM-S	$1,022	P1S	101	1.15	3.80	89.5	19.409	230/460	9
		1800	182/4JM	00318ET3H182JM-S	$1,022	P1S	101	1.15	3.10	89.5	19.409	575	9
		1800	182/4JM	00318ET3V182JM-S	$1,022	P1S	101	1.15	4.40	89.5	19.409	200/400	9
		1800	182/4JM	00318ET3E182JMV-S	$1,080	P1S	101	1.15	3.80	89.5	20.749	230/460	9;15
		1800	182/4JM	00318ET3E182JM-W22	$1,022	P1	97	1.25	3.91	89.5	17.411	230/460	
		1800	182/4JM	00318ET3H182JM-W22	$1,022	P1	96	1.25	3.13	89.5	17.411	575	
		1200	213/5JM	00312ET3E213JM-S	$1,423	P1S	147	1.15	4.20	89.5	20.433	230/460	9
		1200	213/5JM	00312ET3E213JM-W22	$1,423	P1	160	1.25	4.41	89.5	20.392	230/460	

continued on next page

Please refer to back cover for description of "NOTES"

For detailed specifications, data sheets, drawings and performance curves visit http://www.weg.net

CLOSE-COUPLED PUMP TEFC MOTORS

JM - TEFC - Three-Phase - *continued*

HP	kW	RPM	Frame	Catalog Number	List Price	Mult. Symbol	Approx. Shipping Weight (lbs)	Service Factor	FL Amps @ High	FL. Eff (%)	"C" Dimension (in)	Voltage (V)	Notes
5	3.7	3600	182/4JM	00536ET3E184JM-S	$1,075	P1S	99	1.15	5.90	88.5	19.409	230/460	9
		3600	182/4JM	00536ET3H184JM-S	$1,075	P1S	99	1.15	4.70	88.5	19.409	575	9
		3600	182/4JM	00536ET3P184JM-S	$1,075	P1S	99	1.15	13.6	88.5	19.409	200	9
		3600	182/4JM	00536ET3V184JM-S	$1,075	P1S	99	1.15	6.80	88.5	19.409	200/400	9
		3600	182/4JM	00536ET3E184JMV-S	$1,247	P1S	99	1.15	5.90	88.5	20.749	230/460	9;15
		3600	182/4JM	00536ET3E184JM-W22	$1,075	P1	108	1.25	5.90	88.5	17.411	230/460	
		3600	182/4JM	00536ET3H184JM-W22	$1,075	P1	107	1.25	4.72	88.5	17.411	575	
		1800	182/4JM	00518ET3E184JM-S	$1,141	P1S	94	1.15	6.50	89.5	19.409	230/460	9
		1800	182/4JM	00518ET3H184JM-S	$1,141	P1S	94	1.15	5.20	89.5	19.409	575	9
		1800	182/4JM	00518ET3P184JM-S	$1,141	P1S	94	1.15	14.9	89.5	19.409	200	9
		1800	182/4JM	00518ET3V184JM-S	$1,141	P1S	94	1.15	7.50	89.5	19.409	200/400	9
		1800	182/4JM	00518ET3E184JMV-S	$1,199	P1S	94	1.15	6.50	89.5	20.749	230/460	9;15
		1800	182/4JM	00518ET3E184JM-W22	$1,141	P1	106	1.25	6.45	89.5	17.411	230/460	
		1800	182/4JM	00518ET3H184JM-W22	$1,141	P1	106	1.25	5.16	89.5	17.411	575	
		1800	182/4JM	00518ET3P184JM-W22	$1,141	P1	106	1.25	14.8	89.5	17.411	200	
		1200	213/5JM	00512ET3E215JM-S	$1,769	P1S	163	1.15	6.70	89.5	21.220	230/460	9
		1200	213/5JM	00512ET3E215JM-W22	$1,769	P1	180	1.25	6.83	89.5	20.392	230/460	
7.5	5.5	3600	182/4JM	00736ET3E184JM-S	$1,313	P1S	102	1.15	8.60	89.5	18.622	230/460	9;12
		3600	213/5JM	00736ET3E213JM-S	$1,419	P1S	152	1.15	8.70	89.5	21.220	230/460	9
		3600	182/4JM	00736ET3H184JM-S	$1,313	P1S	102	1.15	6.90	89.5	18.622	575	9
		3600	213/5JM	00736ET3H213JM-S	$1,419	P1S	152	1.15	6.90	89.5	21.220	575	9
		3600	213/5JM	00736ET3V213JM-S	$1,419	P1S	152	1.15	10.0	89.5	21.220	200/400	9
		3600	182/4JM	00736ET3E184JM-W22	$1,313	P1	108	1.25	8.76	89.5	17.411	230/460	12
		3600	182/4JM	00736ET3H184JM-W22	$1,313	P1	108	1.25	7.01	89.5	17.411	575	12
		3600	213/5JM	00736ET3E213JM-W22	$1,419	P1	168	1.25	8.76	89.5	20.392	230/460	
		3600	213/5JM	00736ET3H213JM-W22	$1,419	P1	163	1.25	7.01	89.5	20.392	575	
		1800	213/5JM	00718ET3E213JM-S	$1,519	P1S	139	1.15	9.10	91.7	20.039	230/460	9
		1800	213/5JM	00718ET3H213JM-S	$1,519	P1S	139	1.15	7.30	91.7	20.039	575	9
		1800	213/5JM	00718ET3P213JM-S	$1,519	P1S	139	1.15	20.8	91.7	20.039	200	9
		1800	213/5JM	00718ET3V213JM-S	$1,519	P1S	139	1.15	10.4	91.7	20.039	200/400	9
		1800	213/5JM	00718ET3E213JM-W22	$1,519	P1	180	1.25	9.18	91.7	20.392	230/460	
		1800	213/5JM	00718ET3H213JM-W22	$1,519	P1	179	1.25	7.34	91.7	20.392	575	
		1200	254/6JM	00712ET3E254JM-S	$2,455	P1S	247	1.15	10.0	91.0	24.055	230/460	9
		1200	254/6JM	00712ET3E254JM-W22	$2,455	P1	319	1.25	9.48	91.0	26.226	230/460	
10	7.5	3600	213/5JM	01036ET3E215JM-S	$1,769	P1S	179	1.15	11.5	90.2	22.795	230/460	9
		3600	213/5JM	01036ET3H215JM-S	$1,769	P1S	179	1.15	9.20	90.2	22.795	575	9
		3600	213/5JM	01036ET3V215JM-S	$1,769	P1S	179	1.15	13.2	90.2	22.795	200/400	9
		3600	213/5JM	01036ET3E215JM-W22	$1,769	P1	185	1.25	11.6	90.2	20.392	230/460	
		3600	213/5JM	01036ET3H215JM-W22	$1,769	P1	185	1.25	9.28	90.2	20.392	575	
		1800	213/5JM	01018ET3E215JM-S	$1,792	P1S	151	1.15	12.2	91.7	20.433	230/460	9
		1800	213/5JM	01018ET3H215JM-S	$1,792	P1S	151	1.15	9.80	91.7	20.433	575	9
		1800	213/5JM	01018ET3V215JM-S	$1,792	P1S	151	1.15	14.0	91.7	20.433	200/400	9
		1800	213/5JM	01018ET3E215JM-W22	$1,792	P1	193	1.25	12.4	91.7	20.392	230/460	
		1800	213/5JM	01018ET3H215JM-W22	$1,792	P1	193	1.25	9.92	91.7	20.392	575	
		1200	254/6JM	01012ET3E256JM-S	$2,979	P1S	278	1.15	13.8	91.0	24.843	230/460	9
		1200	254/6JM	01012ET3E256JM-W22	$2,979	P1	327	1.25	12.9	91.0	26.226	230/460	

continued on next page

Please refer to back cover for description of "NOTES"

For detailed specifications, data sheets, drawings and performance curves visit http://www.weg.net

Data subject to change without notice.

JM - TEFC - Three-Phase - *continued*

HP	kW	RPM	Frame	Catalog Number	List Price	Mult. Symbol	Approx. Shipping Weight (lbs)	Service Factor	FL Amps @ High	FL. Eff (%)	"C" Dimension (in)	Voltage (V)	Notes
15	11	3600	213/5JM	01536ET3E215JM-S	$2,058	P1S	178	1.15	17.0	91.0	22.795	230/460	9;12
		3600	213/5JM	01536ET3H215JM-S	$2,058	P1S	178	1.15	13.6	91.0	22.795	575	9;12
		3600	213/5JM	01536ET3V215JM-S	$2,058	P1S	178	1.15	19.5	91.0	22.795	200/400	9;12
		3600	213/5JM	01536ET3E215JM-W22	$2,058	P1	187	1.25	17.0	91.0	20.392	230/460	12
		3600	213/5JM	01536ET3H215JM-W22	$2,058	P1	185	1.25	13.8	91.0	20.392	575	12
		3600	254/6JM	01536ET3E254JM-S	$2,214	P1S	216	1.15	17.4	91.0	24.055	230/460	9;12
		3600	254/6JM	01536ET3H254JM-S	$2,214	P1S	216	1.15	13.9	91.0	24.055	575	9
		3600	254/6JM	01536ET3V254JM-S	$2,214	P1S	216	1.15	20.0	91.0	24.055	200/400	9
		3600	254/6JM	01536ET3E254JM-W22	$2,214	P1	301	1.25	17.2	91.0	26.226	230/460	
		3600	254/6JM	01536ET3H254JM-W22	$2,214	P1	300	1.25	13.8	91.0	26.226	575	
		1800	254/6JM	01518ET3E254JM-S	$2,609	P1S	249	1.15	18.2	92.4	24.055	230/460	9
		1800	254/6JM	01518ET3H254JM-S	$2,609	P1S	249	1.15	14.6	92.4	24.055	575	9
		1800	254/6JM	01518ET3V254JM-S	$2,609	P1S	249	1.15	20.9	92.4	24.055	200/400	9
		1800	254/6JM	01518ET3E254JM-W22	$2,609	P1	350	1.25	18.0	92.4	26.226	230/460	
		1800	254/6JM	01518ET3H254JM-W22	$2,609	P1	349	1.25	14.4	92.4	26.226	575	
		1200	284/6JM	01512ET3E284JM-W22	$3,912	P1	434	1.25	17.9	91.7	28.700	230/460	
20	15	3600	254/6JM	02036ET3E256JM-S	$2,965	P1S	257	1.15	22.7	91.0	24.843	230/460	9
		3600	254/6JM	02036ET3H256JM-S	$2,965	P1S	257	1.15	18.2	91.0	24.843	575	9
		3600	254/6JM	02036ET3V256JM-S	$2,965	P1S	257	1.15	26.1	91.0	24.843	200/400	9
		3600	254/6JM	02036ET3E256JM-W22	$2,965	P1	327	1.25	23.2	91.0	26.226	230/460	
		3600	254/6JM	02036ET3H256JM-W22	$2,965	P1	325	1.25	18.6	91.0	26.226	575	
		1800	254/6JM	02018ET3E256JM-S	$2,857	P1S	279	1.15	24.7	93.0	24.843	230/460	9
		1800	254/6JM	02018ET3H256JM-S	$2,857	P1S	279	1.15	19.8	92.4	24.843	575	9
		1800	254/6JM	02018ET3V256JM-S	$2,857	P1S	279	1.15	28.4	93.0	24.843	200/400	9
		1800	254/6JM	02018ET3E256JM-W22	$2,857	P1	399	1.25	24.1	93.0	26.226	230/460	
		1800	254/6JM	02018ET3H256JM-W22	$2,857	P1	398	1.25	19.3	93.0	26.226	575	
		1200	284/6JM	02012ET3E286JM-W22	$4,940	P1	461	1.25	24.2	91.7	28.700	230/460	
25	18.5	3600	254/6JM	02536ET3E256JM-S	$3,231	P1S	267	1.15	28.5	91.7	24.843	230/460	9
		3600	254/6JM	02536ET3H256JM-S	$3,231	P1S	267	1.15	22.8	91.7	24.843	575	9
		3600	254/6JM	02536ET3V256JM-S	$3,231	P1S	267	1.15	32.8	91.7	24.843	200/400	9
		3600	254/6JM	02536ET3E256JM-W22	$3,231	P1	375	1.00	28.1	91.7	26.226	230/460	
		3600	254/6JM	02536ET3H256JM-W22	$3,231	P1	374	1.00	22.5	91.7	26.226	575	
		3600	284/6JM	02536ET3E284JM-W22	$3,619	P1	421	1.25	28.5	91.7	28.700	230/460	
		3600	284/6JM	02536ET3H284JM-W22	$3,619	P1	416	1.25	22.8	91.7	28.700	575	
		1800	284/6JM	02518ET3E284JM-W22	$3,734	P1	452	1.25	29.5	93.6	28.700	230/460	
		1800	284/6JM	02518ET3H284JM-W22	$3,734	P1	451	1.25	23.6	93.6	28.700	575	
		1200	324/6JM	02512ET3E324JM-W22	$5,546	P1	598	1.25	30.4	93.0	29.645	230/460	
30	22	3600	284/6JM	03036ET3E286JM-W22	$4,539	P1	439	1.25	33.8	91.7	28.700	230/460	
		3600	284/6JM	03036ET3H286JM-W22	$4,539	P1	439	1.25	27.0	91.7	28.700	575	
		1800	284/6JM	03018ET3E286JM-W22	$4,096	P1	490	1.25	35.1	93.6	28.700	230/460	
		1800	284/6JM	03018ET3H286JM-W22	$4,096	P1	490	1.25	28.1	93.6	28.700	575	
		1200	324/6JM	03012ET3E326JM-W22	$6,686	P1	636	1.25	36.2	93.0	29.645	230/460	

continued on next page

Please refer to back cover for description of "NOTES"

For detailed specifications, data sheets, drawings and performance curves visit http://www.weg.net

CLOSE-COUPLED PUMP TEFC MOTORS

JM - TEFC - Three-Phase - *continued*

HP	kW	RPM	Frame	Catalog Number	List Price	Mult. Symbol	Approx. Shipping Weight (lbs)	Service Factor	FL Amps @ High	FL. Eff (%)	"C" Dimension (in)	Voltage (V)	Notes
40	30	3600	284/6JM	04036ET3E286JM-W22	$5,368	P1	469	1.00	45.8	92.4	28.700	230/460	37
		3600	284/6JM	04036ET3H286JM-W22	$5,368	P1	586	1.00	36.6	92.4	28.700	575	37
		3600	324/6JM	04036ET3E324JM-W22	$5,534	P1	605	1.25	45.8	92.4	29.645	230/460	
		3600	324/6JM	04036ET3H324JM-W22	$5,534	P1	604	1.25	36.6	92.4	29.645	575	
		1800	324/6JM	04018ET3E324JM-W22	$5,316	P1	628	1.25	47.1	94.1	29.645	230/460	
		1800	324/6JM	04018ET3H324JM-W22	$5,316	P1	621	1.25	37.7	94.1	29.645	575	
		1200	364/5JM	04012ET3E364JM-W22	$8,807	P1	1023	1.25	46.5	94.1	33.031	230/460	
50	37	3600	324/6JM	05036ET3E326JM-W22	$6,622	P1	623	1.25	56.1	93.0	29.645	230/460	
		1800	324/6JM	05018ET3E326JM-W22	$6,513	P1	651	1.25	59.2	94.5	29.645	230/460	
		1800	324/6JM	05018ET3H326JM-W22	$6,513	P1	648	1.25	47.4	94.5	29.645	575	
		1200	364/5JM	05012ET3E365JM-W22	$10,551	P1	1040	1.25	57.4	94.1	33.031	230/460	
60	45	3600	324/6JM	06036ET3E326JM-W22	$7,699	P1	630	1.00	70.2	93.6	29.645	230/460	37
		3600	364/5JM	06036ET3E364JM-W22	$8,261	P1	985	1.25	67.0	93.6	33.832	230/460	
		3600	364/5JM	06036ET3H364JM-W22	$8,261	P1	941	1.25	53.6	93.6	33.832	575	
		1800	364/5JM	06018ET3E364JM-W22	$8,912	P1	1048	1.25	68.3	95.0	33.031	230/460	
		1800	364/5JM	06018ET3H364JM-W22	$8,912	P1	1037	1.25	54.6	95.0	33.031	575	
75	55	3600	364/5JM	07536ET3E365JM-W22	$11,124	P1	989	1.25	81.9	93.6	33.832	230/460	
		3600	364/5JM	07536ET3H365JM-W22	$11,124	P1	992	1.25	65.5	93.6	33.832	575	
		1800	364/5JM	07518ET3E365JM-W22	$10,057	P1	1065	1.25	84.1	95.4	33.031	230/460	
		1800	364/5JM	07518ET3H365JM-W22	$10,057	P1	1039	1.25	67.3	95.4	33.031	575	
100	75	3600	404/5TCZ	10036ET3E405JM-W22	$13,093	P1	1220	1.25	110	94.1	37.724	230/460	
		3600	404/5TCZ	10036ET3G405JM-W22	$13,093	P1	1215	1.25	110	94.1	37.724	460	
		1800	404/5TCZ	10018ET3E405JM-W22	$12,300	P1	1321	1.25	111	95.4	37.724	230/460	
		1800	404/5TCZ	10018ET3G405JM-W22	$12,300	P1	1318	1.25	111	95.4	37.724	460	

Please refer to back cover for description of "NOTES"

For detailed specifications, data sheets, drawings and performance curves visit http://www.weg.net

Data subject to change without notice.

JP - TEFC - Three-Phase

HP	kW	RPM	Frame	Catalog Number	List Price	Mult. Symbol	Approx. Shipping Weight (lbs)	Service Factor	FL Amps @ High	FL. Eff (%)	"C" Dimension (in)	Voltage (V)	Notes
1	0.75	1800	143/5JP	00118ET3E143JP-S	$624	P1S	50	1.15	1.50	85.5	19.173	230/460	9
		1800	143/5JP	00118ET3E143JP-W22	$624	P1	53	1.25	1.47	85.5	18.736	230/460	
		1200	143/5JP	00112ET3E145JP-S	$714	P1S	47	1.15	1.60	82.5	19.173	230/460	9
		1200	143/5JP	00112ET3E145JP-W22	$714	P1	55	1.25	1.73	82.5	18.736	230/460	
1.5	1.1	3600	143/5JP	00156ET3E143JP-S	$649	P1S	46	1.15	1.90	84.0	18.780	230/460	9
		3600	143/5JP	00156ET3E143JP-W22	$649	P1	51	1.25	1.96	84.0	18.736	230/460	
		1800	143/5JP	00158ET3E145JP-S	$653	P1S	52	1.15	2.00	86.5	19.173	230/460	9
		1800	143/5JP	00158ET3E145JP-W22	$653	P1	58	1.25	2.02	86.5	18.736	230/460	
		1200	182/4JP	00152ET3E182JP-S	$924	P1S	86	1.15	2.20	87.5	20.906	230/460	9
		1200	182/4JP	00152ET3E182JP-W22	$924	P1	74	1.25	2.54	87.5	20.475	230/460	
2	1.5	3600	143/5JP	00236ET3E145JP-S	$694	P1S	52	1.15	2.50	85.5	19.567	230/460	9
		3600	143/5JP	00236ET3E145JP-W22	$694	P1	59	1.25	2.56	85.5	18.736	230/460	
		1800	143/5JP	00218ET3E145JP-S	$718	P1S	55	1.15	2.70	86.5	19.567	230/460	9
		1800	143/5JP	00218ET3E145JP-W22	$718	P1	59	1.25	2.76	86.5	18.736	230/460	
		1200	182/4JP	00212ET3E184JP-S	$1,040	P1S	100	1.15	3.00	88.5	21.693	230/460	9
		1200	182/4JP	00212ET3E184JP-W22	$1,040	P1	91	1.25	3.23	88.5	20.475	230/460	
3	2.2	3600	143/5JP	00336ET3E145JP-S	$915	P1S	61	1.15	3.50	86.5	20.748	230/460	9;12
		3600	143/5JP	00336ET3E145JP-W22	$915	P1	61	1.25	3.71	86.5	18.736	230/460	12
		3600	182/4JP	00336ET3E182JP-S	$933	P1S	88	1.15	3.70	86.5	20.906	230/460	9
		3600	182/4JP	00336ET3E182JP-W22	$933	P1	111	1.25	3.63	86.5	20.475	230/460	
		3600	182/4JP	00336ET3H182JP-W22	$933	P1	103	1.25	2.90	86.5	20.475	575	
		1800	182/4JP	00318ET3E182JP-S	$1,041	P1S	108	1.15	3.80	89.5	22.480	230/460	9
		1800	182/4JP	00318ET3H182JP-S	$1,041	P1S	108	1.15	3.10	89.5	22.480	575	9
		1800	182/4JP	00318ET3E182JP-W22	$1,041	P1	107	1.25	3.91	89.5	20.475	230/460	
		1800	182/4JP	00318ET3H182JP-W22	$1,041	P1	100	1.25	3.13	89.5	20.475	575	
		1200	213/5JP	00312ET3E213JP-S	$1,449	P1S	152	1.15	4.20	89.5	24.291	230/460	9
		1200	213/5JP	00312ET3E213JP-W22	$1,449	P1	126	1.25	4.41	89.5	24.264	230/460	
5	3.7	3600	182/4JP	00536ET3E184JP-S	$1,094	P1S	106	1.15	5.90	88.5	22.480	230/460	9
		3600	182/4JP	00536ET3E184JP-W22	$1,094	P1	118	1.25	5.90	88.5	20.475	230/460	
		3600	182/4JP	00536ET3H184JP-W22	$1,094	P1	113	1.25	4.72	88.5	20.475	575	
		1800	182/4JP	00518ET3E184JP-S	$1,161	P1S	105	1.15	6.50	89.5	22.480	230/460	9
		1800	182/4JP	00518ET3H184JP-S	$1,161	P1S	105	1.15	5.20	89.5	22.480	575	9
		1800	182/4JP	00518ET3E184JP-W22	$1,161	P1	117	1.25	6.45	89.5	20.475	230/460	
		1800	182/4JP	00518ET3H184JP-W22	$1,161	P1	116	1.25	5.16	89.5	20.475	575	
		1200	213/5JP	00512ET3E215JP-S	$1,801	P1S	171	1.15	6.70	89.5	25.079	230/460	9
		1200	213/5JP	00512ET3E215JP-W22	$1,801	P1	193	1.25	6.83	89.5	24.264	230/460	

continued on next page

Please refer to back cover for description of "NOTES"

For detailed specifications, data sheets, drawings and performance curves visit http://www.weg.net

CLOSE-COUPLED PUMP TEFC MOTORS

JP - TEFC - Three-Phase - *continued*

HP	kW	RPM	Frame	Catalog Number	List Price	Mult. Symbol	Approx. Shipping Weight (lbs)	Service Factor	FL Amps @ High	FL. Eff (%)	"C" Dimension (in)	Voltage (V)	Notes
		3600	182/4JP	00736ET3E184JP-S	$1,339	P1S	109	1.15	8.60	89.5	21.693	230/460	9;12
		3600	182/4JP	00736ET3E184JP-W22	$1,339	P1	118	1.25	8.76	89.5	20.475	230/460	12
		3600	213/5JP	00736ET3E213JP-S	$1,445	P1S	161	1.15	8.70	89.5	25.079	230/460	9
		3600	213/5JP	00736ET3H213JP-S	$1,445	P1S	161	1.15	6.90	89.5	25.079	575	9
		3600	213/5JP	00736ET3E213JP-W22	$1,445	P1	177	1.25	8.76	89.5	24.264	230/460	
		3600	213/5JP	00736ET3H213JP-W22	$1,445	P1	168	1.25	7.01	89.5	24.264	575	
7.5	5.5	1800	213/5JP	00718ET3E213JP-S	$1,543	P1S	148	1.15	9.10	91.7	23.898	230/460	9
		1800	213/5JP	00718ET3H213JP-S	$1,543	P1S	148	1.15	7.30	91.7	23.898	575	9
		1800	213/5JP	00718ET3V213JP-S	$1,543	P1S	148	1.15	10.4	91.7	23.898	200/400	9
		1800	213/5JP	00718ET3E213JP-W22	$1,543	P1	189	1.25	9.18	91.7	24.264	230/460	
		1800	213/5JP	00718ET3H213JP-W22	$1,543	P1	188	1.25	7.34	91.7	24.264	575	
		1200	254/6JP	00712ET3E254JP-S	$2,495	P1S	256	1.15	10.0	91.0	26.929	230/460	9
		1200	254/6JP	00712ET3E254JP-W22	$2,495	P1	323	1.25	9.48	91.0	29.106	230/460	
		3600	213/5JP	01036ET3E215JP-S	$1,801	P1S	184	1.15	11.5	90.2	26.654	230/460	9
		3600	213/5JP	01036ET3H215JP-S	$1,801	P1S	184	1.15	9.20	90.2	26.654	575	9
		3600	213/5JP	01036ET3E215JP-W22	$1,801	P1	195	1.25	11.6	90.2	24.264	230/460	
		3600	213/5JP	01036ET3H215JP-W22	$1,801	P1	191	1.25	9.28	90.2	24.264	575	
		1800	213/5JP	01018ET3E215JP-S	$1,823	P1S	160	1.15	12.2	91.7	24.291	230/460	9
10	7.5	1800	213/5JP	01018ET3H215JP-S	$1,823	P1S	160	1.15	9.80	91.7	24.291	575	9
		1800	213/5JP	01018ET3V215JP-S	$1,823	P1S	160	1.15	14.0	91.7	24.291	200/400	9
		1800	213/5JP	01018ET3E215JP-W22	$1,823	P1	203	1.25	12.4	91.7	24.264	230/460	
		1800	213/5JP	01018ET3H215JP-W22	$1,823	P1	202	1.25	9.92	91.7	24.264	575	
		1200	254/6JP	01012ET3E256JP-S	$3,103	P1S	287	1.15	13.8	91.0	27.717	230/460	9
		1200	254/6JP	01012ET3E256JP-W22	$3,103	P1	326	1.25	12.9	91.0	29.106	230/460	
		3600	213/5JP	01536ET3E215JP-S	$2,099	P1S	179	1.15	17.0	91.0	26.654	230/460	9;12
		3600	213/5JP	01536ET3H215JP-S	$2,099	P1S	179	1.15	13.6	91.0	26.654	575	9;12
		3600	213/5JP	01536ET3E215JP-W22	$2,099	P1	194	1.25	17.0	91.0	24.264	230/460	12
		3600	254/6JP	01536ET3E254JP-S	$2,629	P1S	217	1.15	17.4	91.0	26.929	230/460	9
		3600	254/6JP	01536ET3V254JP-S	$2,629	P1S	217	1.15	20.0	91.0	26.929	200/400	9
		3600	254/6JP	01536ET3E254JP-W22	$2,629	P1	305	1.25	17.2	91.0	29.106	230/460	
15	11	3600	254/6JP	01536ET3H254JP-W22	$2,629	P1	302	1.25	13.8	91.0	29.106	575	
		1800	254/6JP	01518ET3E254JP-S	$2,653	P1S	251	1.15	18.2	92.4	26.929	230/460	9
		1800	254/6JP	01518ET3H254JP-S	$2,653	P1S	251	1.15	14.6	92.4	26.929	575	9
		1800	254/6JP	01518ET3V254JP-S	$2,653	P1S	251	1.15	20.9	92.4	26.929	200/400	9
		1800	254/6JP	01518ET3E254JP-W22	$2,653	P1	353	1.25	18.0	92.4	29.106	230/460	
		1800	254/6JP	01518ET3H254JP-W22	$2,653	P1	353	1.25	14.4	92.4	29.106	575	
		1200	284/6JP	01512ET3E284JP-W22	$3,972	P1	436	1.25	17.9	91.7	31.575	230/460	

continued on next page

Please refer to back cover for description of "NOTES"

For detailed specifications, data sheets, drawings and performance curves visit http://www.weg.net

Data subject to change without notice.

JP - TEFC - Three-Phase - *continued*

HP	kW	RPM	Frame	Catalog Number	List Price	Mult. Symbol	Approx. Shipping Weight (lbs)	Service Factor	FL Amps @ High	FL. Eff (%)	"C" Dimension (in)	Voltage (V)	Notes
20	15	3600	254/6JP	02036ET3E256JP-S	$3,018	P1S	258	1.15	22.7	91.0	27.717	230/460	9
		3600	254/6JP	02036ET3H256JP-S	$3,018	P1S	258	1.15	18.2	91.0	27.717	575	9
		3600	254/6JP	02036ET3E256JP-W22	$3,018	P1	330	1.25	23.2	91.0	29.106	230/460	
		3600	254/6JP	02036ET3H256JP-W22	$3,018	P1	327	1.25	18.6	91.0	29.106	575	
		1800	254/6JP	02018ET3E256JP-S	$2,908	P1S	281	1.15	24.7	92.4	27.717	230/460	9
		1800	254/6JP	02018ET3H256JP-S	$2,908	P1S	281	1.15	19.8	93.0	27.717	575	9
		1800	254/6JP	02018ET3V256JP-S	$2,908	P1S	281	1.15	28.4	93.0	27.717	200/400	9
		1800	254/6JP	02018ET3E256JP-W22	$2,908	P1	404	1.25	24.1	93.0	29.106	230/460	
		1800	254/6JP	02018ET3H256JP-W22	$2,908	P1	401	1.25	19.3	93.0	29.106	575	
		1200	284/6JP	02012ET3E286JP-W22	$5,015	P1	463	1.25	24.2	91.7	31.575	230/460	
25	18.5	3600	254/6JP	02536ET3E256JP-S	$3,296	P1S	269	1.15	28.5	91.7	27.717	230/460	9
		3600	254/6JP	02536ET3H256JP-S	$3,296	P1S	269	1.15	22.8	91.7	27.717	575	9
		3600	254/6JP	02536ET3E256JP-W22	$3,296	P1	378	1.00	28.1	91.7	29.106	230/460	
		3600	254/6JP	02536ET3H256JP-W22	$3,296	P1	399	1.00	22.5	91.7	29.106	575	
		3600	284/6JP	02536ET3E284JP-W22	$3,679	P1	422	1.25	28.5	91.7	31.575	230/460	
		3600	284/6JP	02536ET3H284JP-W22	$3,679	P1	421	1.25	22.8	91.7	31.575	575	
		1800	284/6JP	02518ET3E284JP-W22	$3,797	P1	454	1.25	29.5	93.6	31.575	230/460	
		1800	284/6JP	02518ET3H284JP-W22	$3,797	P1	453	1.25	23.6	93.6	31.575	575	
		1200	324/6JP	02512ET3E324JP-W22	$5,972	P1	535	1.25	30.4	93.0	34.021	230/460	
30	22	3600	284/6JP	03036ET3E286JP-W22	$4,614	P1	441	1.25	33.8	91.7	31.575	230/460	
		3600	284/6JP	03036ET3H286JP-W22	$4,614	P1	463	1.25	27.0	91.7	31.575	575	
		1800	284/6JP	03018ET3E286JP-W22	$4,167	P1	492	1.25	35.1	93.6	31.575	230/460	
		1800	284/6JP	03018ET3H286JP-W22	$4,167	P1	490	1.25	28.1	93.6	31.575	575	
		1200	324/6JP	03012ET3E326JP-W22	$6,690	P1	639	1.25	36.2	93.0	34.021	230/460	
40	30	3600	284/6JP	04036ET3E286JP-W22	$5,475	P1	471	1.00	45.8	92.4	31.575	230/460	37
		3600	284/6JP	04036ET3H286JP-W22	$5,475	P1	617	1.00	36.6	92.4	31.575	575	37
		3600	324/6JP	04036ET3E324JP-W22	$5,628	P1	602	1.25	45.8	92.4	34.021	230/460	
		3600	324/6JP	04036ET3H324JP-W22	$5,628	P1	579	1.25	36.6	92.4	34.021	575	
		1800	324/6JP	04018ET3E324JP-W22	$5,413	P1	625	1.25	47.1	94.1	34.021	230/460	
		1800	324/6JP	04018ET3H324JP-W22	$5,413	P1	608	1.25	37.7	94.1	34.021	575	
		1200	364/5JP	04012ET3E364JP-W22	$9,268	P1	1003	1.25	46.5	94.1	35.916	230/460	
50	37	3600	324/6JP	05036ET3E326JP-W22	$6,733	P1	624	1.25	56.1	93.0	34.021	230/460	
		3600	324/6JP	05036ET3H326JP-W22	$6,733	P1	622	1.25	44.9	93.0	34.021	575	
		1800	324/6JP	05018ET3E326JP-W22	$6,624	P1	648	1.25	59.2	94.5	34.021	230/460	
		1800	324/6JP	05018ET3H326JP-W22	$6,624	P1	645	1.25	47.4	94.5	34.021	575	
		1200	364/5JP	05012ET3E365JP-W22	$10,748	P1	983	1.25	57.4	94.1	35.916	230/460	
60	45	3600	324/6JP	06036ET3E326JP-W22	$7,853	P1	627	1.00	70.2	93.6	34.021	230/460	37
		3600	364/5JP	06036ET3E364JP-W22	$10,252	P1	994	1.25	67.0	93.6	36.711	230/460	
		3600	364/5JP	06036ET3H364JP-W22	$10,252	P1	946	1.25	53.6	93.6	36.711	575	
		1800	364/5JP	06018ET3E364JP-W22	$9,619	P1	1056	1.25	68.3	95.0	35.916	230/460	
		1800	364/5JP	06018ET3H364JP-W22	$9,619	P1	1042	1.25	54.6	95.0	35.916	575	
		1200	404/5JP	06012ET3E404JP-W22	$12,444	P1	1156	1.25	69.5	94.5	38.911	230/460	

continued on next page

Please refer to back cover for description of "NOTES"

For detailed specifications, data sheets, drawings and performance curves visit http://www.weg.net

CLOSE-COUPLED PUMP ODP MOTORS

JP - TEFC - Three-Phase - *continued*

HP	kW	RPM	Frame	Catalog Number	List Price	Mult. Symbol	Approx. Shipping Weight (lbs)	Service Factor	FL Amps @ High	FL. Eff (%)	"C" Dimension (in)	Voltage (V)	Notes
75	55	3600	364/5JP	07536ET3E365JP-W22	$11,321	P1	997	1.25	81.9	93.6	36.711	230/460	
		3600	364/5JP	07536ET3G365JP-W22	$11,321	P1	1153	1.25	81.9	93.6	36.711	460	
		3600	364/5JP	07536ET3H365JP-W22	$11,321	P1	997	1.25	65.5	93.6	36.711	575	
		1800	364/5JP	07518ET3E365JP-W22	$10,235	P1	1075	1.25	84.1	95.4	35.916	230/460	
		1800	364/5JP	07518ET3H365JP-W22	$10,235	P1	1044	1.25	67.3	95.4	35.916	575	
		1200	404/5JP	07512ET3E405JP-W22	$14,005	P1	1209	1.25	84.9	94.5	38.911	230/460	
100	75	3600	404/5JP	10036ET3E405JP-W22	$13,949	P1	1203	1.25	110	94.1	40.551	230/460	
		3600	404/5JP	10036ET3G405JP-W22	$13,949	P1	1222	1.25	110	94.1	40.551	460	
		1800	404/5JP	10018ET3E405JP-W22	$12,411	P1	1291	1.25	111	95.4	38.911	230/460	
		1800	404/5JP	10018ET3G405JP-W22	$12,411	P1	1294	1.25	111	95.4	38.911	460	

JP - TEFC - Explosion Proof

HP	kW	RPM	Frame	Catalog Number	List Price	Mult. Symbol	Approx. Shipping Weight (lbs)	Service Factor	FL Amps @ High	FL. Eff (%)	"C" Dimension (in)	Voltage (V)	Notes
3	2.2	1800	182/4JP	00318XT3E182JP	$1,586	XT	119	1.15	3.91	89.5	20.431	230/460	
		1800	182/4JP	00318XT3H182JP	$1,586	XT	119	1.15	3.13	89.5	20.431	575	
5	3.7	1800	182/4JP	00518XT3E184JP	$1,609	XT	136	1.15	6.57	89.5	20.306	230/460	
		1800	182/4JP	00518XT3H184JP	$1,609	XT	136	1.15	5.26	89.5	20.306	575	

Please refer to back cover for description of "NOTES"

For detailed specifications, data sheets, drawings and performance curves visit http://www.weg.net

Data subject to change without notice.

JM - ODP - Single Phase

HP	kW	RPM	Frame	Catalog Number	List Price	Mult. Symbol	Approx. Shipping Weight (lbs)	Service Factor	FL Amps @ High	FL. Eff (%)	"C" Dimension (in)	Voltage (V)	Notes
3	2.2	3600	182/4JM	**003360S1B182JM**	**$977**	P1CS	111	1.25	11.7	86.0	18.976	115/208-230	9
5	3.7	3600	182/4JM	**005360S1B184JM**	**$1,383**	P1CS	123	1.25	19.0	88.0	18.976	115/208-230	9
7.5	5.5	3600	213/5JM	**007360S1C213JM**	**$1,567**	P1CS	132	1.15	30.2	85.5	18.667	208-230	9
10	7.5	3600	213/5JM	**010360S1C215JM**	**$2,067**	P1CS	132	1.15	42.0	84.0	20.499	208-230	9

JP - ODP - Single Phase

HP	kW	RPM	Frame	Catalog Number	List Price	Mult. Symbol	Approx. Shipping Weight (lbs)	Service Factor	FL Amps @ High	FL. Eff (%)	"C" Dimension (in)	Voltage (V)	Notes
3	2.2	3600	182/4JP	**003360S1B182JP**	**$977**	P1CS	117	1.25	11.7	86.0	21.942	115/208-230	9
5	3.7	3600	182/4JP	**005360S1B184JP**	**$1,383**	P1CS	127	1.25	19.0	88.0	21.942	115/208-230	9
7.5	5.5	3600	213/5JP	**007360S1C213JP**	**$1,567**	P1CS	142	1.15	30.2	85.5	22.558	208-230	9
10	7.5	3600	213/5JP	**010360S1C215JP**	**$2,067**	P1CS	138	1.15	42.0	84.0	24.390	208-230	9

Please refer to back cover for description of "NOTES"

For detailed specifications, data sheets, drawings and performance curves visit http://www.weg.net

Pump Motors

CLOSE-COUPLED PUMP ODP MOTORS

JM - ODP - Three Phase

HP	kW	RPM	Frame	Catalog Number	List Price	Mult. Symbol	Approx. Shipping Weight (lbs)	Service Factor	FL Amps @ High	FL. Eff (%)	"C" Dimension (in)	Voltage (V)	Notes
1	0.75	1800	143/5JM	001180T3E143JM-S	$486	P1S	40	1.15	1.50	85.5	13.701	230/460	9
		1800	143/5JM	001180T3H143JM-S	$486	P1S	40	1.15	1.20	85.5	13.701	575	9
		1800	143/5JM	001180T3V143JM-S	$486	P1S	40	1.15	1.70	85.5	13.701	200/400	9
		1200	143/5JM	001120T3E145JM-S	$550	P1S	40	1.15	1.70	82.5	13.701	230/460	9
1.5	1.1	3600	143/5JM	001560T3E143JM-S	$534	P1S	35	1.15	1.90	84.0	13.701	230/460	9
		3600	143/5JM	001560T3V143JM-S	$534	P1S	35	1.15	2.10	84.0	13.701	200/400	9
		1800	143/5JM	001580T3E145JM-S	$553	P1S	47	1.15	2.10	86.5	14.882	230/460	9
		1800	143/5JM	001580T3H145JM-S	$553	P1S	47	1.15	1.70	86.5	14.882	575	9
		1800	143/5JM	001580T3V145JM-S	$553	P1S	47	1.15	2.40	86.5	14.882	200/400	9
		1200	182/4JM	001520T3E182JM-S	$769	P1S	71	1.15	2.30	86.5	15.472	230/460	9
2	1.5	3600	143/5JM	002360T3E145JM-S	$580	P1S	42	1.15	2.40	85.5	14.094	230/460	9
		3600	143/5JM	002360T3H145JM-S	$580	P1S	42	1.15	1.90	85.5	14.094	575	9
		3600	143/5JM	002360T3V145JM-S	$580	P1S	42	1.15	2.80	85.5	14.094	200/400	9
		1800	143/5JM	002180T3E145JM-S	$607	P1S	44	1.15	2.70	86.5	14.882	230/460	9
		1800	143/5JM	002180T3H145JM-S	$607	P1S	44	1.15	2.20	86.5	14.882	575	9
		1800	143/5JM	002180T3V145JM-S	$607	P1S	44	1.15	3.10	86.5	14.882	200/400	9
		1200	182/4JM	002120T3E184JM-S	$816	P1S	83	1.15	3.00	87.5	16.260	230/460	9
3	2.2	3600	143/5JM	003360T3E145JM-S	$660	P1S	45	1.15	3.60	85.5	14.488	230/460	9
		3600	143/5JM	003360T3H145JM-S	$660	P1S	45	1.15	2.90	85.5	14.488	575	9
		3600	143/5JM	003360T3V145JM-S	$660	P1S	45	1.15	4.10	85.5	14.488	200/400	9
		1800	182/4JM	003180T3E182JM-S	$665	P1S	84	1.15	3.90	89.5	16.654	230/460	9
		1800	182/4JM	003180T3H182JM-S	$665	P1S	84	1.15	3.10	89.5	16.654	575	9
		1800	182/4JM	003180T3V182JM-S	$665	P1S	84	1.15	4.40	89.5	16.654	200/400	9
		1200	213/5JM	003120T3E213JM-S	$1,105	P1S	123	1.15	4.20	88.5	17.717	230/460	9
5	3.7	3600	182/4JM	005360T3E182JM-S	$780	P1S	70	1.15	6.10	86.5	16.260	230/460	9
		3600	182/4JM	005360T3H182JM-S	$780	P1S	70	1.15	4.90	86.5	16.260	575	9
		3600	182/4JM	005360T3V182JM-S	$780	P1S	70	1.15	7.00	86.5	16.260	200/400	9
		1800	182/4JM	005180T3E184JM-S	$849	P1S	96	1.15	6.30	89.5	17.835	230/460	9
		1800	182/4JM	005180T3H184JM-S	$849	P1S	96	1.15	5.10	89.5	17.835	575	9
		1800	182/4JM	005180T3V184JM-S	$849	P1S	96	1.15	7.30	89.5	17.835	200/400	9
		1200	213/5JM	005120T3E215JM-S	$1,319	P1S	144	1.15	6.70	89.5	18.110	230/460	9
7.5	5.5	3600	182/4JM	007360T3E184JM-S	$1,086	P1S	87	1.15	8.70	88.5	16.654	230/460	9
		3600	182/4JM	007360T3H184JM-S	$1,086	P1S	87	1.15	6.90	88.5	16.654	575	9
		3600	182/4JM	007360T3V184JM-S	$1,086	P1S	87	1.15	10.0	88.5	16.654	200/400	9
		1800	213/5JM	007180T3E213JM-S	$1,119	P1S	135	1.15	9.30	91.0	17.717	230/460	9
		1800	213/5JM	007180T3H213JM-S	$1,120	P1S	135	1.15	7.40	91.0	17.717	575	9
		1800	213/5JM	007180T3V213JM-S	$1,119	P1S	135	1.15	10.6	91.0	17.717	200/400	9
		1200	254JM	007120T3E254JM	$1,985	P1C	249	1.15	9.69	90.2	22.169	230/460	
		1200	254/6JM	007120T3E254JM-S	$1,985	P1S	224	1.15	10.2	90.2	21.969	230/460	9

continued on next page

Please refer to back cover for description of "NOTES"

For detailed specifications, data sheets, drawings and performance curves visit http://www.weg.net

Data subject to change without notice.

JM - ODP - Three Phase - *continued*

HP	kW	RPM	Frame	Catalog Number	List Price	Mult. Symbol	Approx. Shipping Weight (lbs)	Service Factor	FL Amps @ High	FL. Eff (%)	"C" Dimension (in)	Voltage (V)	Notes
10	7.5	3600	213/5JM	010360T3E213JM-S	$1,289	P1S	132	1.15	12.0	89.5	18.110	230/460	9
		3600	213/5JM	010360T3H213JM-S	$1,289	P1S	132	1.15	9.60	89.5	18.110	575	9
		3600	213/5JM	010360T3V213JM-S	$1,289	P1S	132	1.15	13.8	89.5	18.110	200/400	9
		1800	213/5JM	010180T3E215JM-S	$1,364	P1S	140	1.15	12.4	91.7	17.717	230/460	9
		1800	213/5JM	010180T3H215JM-S	$1,366	P1S	140	1.15	9.90	91.7	17.717	575	9
		1200	254/6JM	010120T3E256JM-S	$2,298	P1S	252	1.15	13.9	91.7	21.969	230/460	9
		1200	256JM	010120T3E256JM	$2,298	P1C	271	1.15	12.8	91.7	23.902	230/460	
15	11	3600	213/5JM	015360T3E215JM-S	$1,707	P1S	151	1.15	17.2	90.2	18.898	230/460	9
		3600	213/5JM	015360T3H215JM-S	$1,707	P1S	151	1.15	13.8	90.2	18.898	575	9
		3600	213/5JM	015360T3V215JM-S	$1,707	P1S	151	1.15	19.8	90.2	18.898	200/400	9
		1800	254JM	015180T3E254JM	$1,995	P1C	265	1.15	18.6	93.0	22.169	230/460	
		1800	254JM	015180T3H254JM	$1,995	P1C	265	1.15	14.9	93.0	22.169	575	
		1800	254JM	015180T3V254JM	$1,995	P1C	273	1.15	21.4	93.0	22.169	200/400	
		1800	254/6JM	015180T3E254JM-S	$1,995	P1S	225	1.15	18.6	93.0	21.969	230/460	9
		1800	254/6JM	015180T3H254JM-S	$1,995	P1S	225	1.15	14.9	93.0	21.969	575	9
		1800	254/6JM	015180T3V254JM-S	$1,995	P1S	225	1.15	21.4	93.0	21.969	200/400	9
		1200	284JM	015120T3E284JM	$3,164	P1C	387	1.15	17.7	91.7	24.261	230/460	
20	15	3600	254JM	020360T3E254JM	$2,107	P1C	223	1.15	24.6	91.0	22.169	230/460	
		3600	254JM	020360T3H254JM	$2,107	P1C	221	1.15	19.7	91.0	22.169	575	
		3600	254JM	020360T3V254JM	$2,107	P1C	222	1.15	28.3	91.0	22.169	200/400	
		3600	254/6JM	020360T3E254JM-S	$2,107	P1S	206	1.15	23.8	91.0	21.969	230/460	9
		3600	254/6JM	020360T3H254JM-S	$2,107	P1S	206	1.15	19.0	91.0	21.969	575	9
		3600	254/6JM	020360T3V254JM-S	$2,107	P1S	206	1.15	27.4	91.0	21.969	200/400	9
		1800	254/6JM	020180T3E256JM-S	$2,413	P1S	250	1.15	25.0	93.0	21.969	230/460	9
		1800	254/6JM	020180T3H256JM-S	$2,413	P1S	250	1.15	20.0	93.0	21.969	575	9
		1800	256JM	020180T3E256JM	$2,413	P1C	303	1.15	24.7	93.0	23.902	230/460	
		1800	256JM	020180T3H256JM	$2,413	P1C	302	1.15	19.8	93.0	23.902	575	
		1200	286JM	020120T3E286JM	$3,872	P1C	436	1.15	24.0	92.4	25.754	230/460	
25	18.5	3600	254/6JM	025360T3E256JM-S	$2,598	P1S	217	1.15	29.1	91.7	21.969	230/460	9
		3600	254/6JM	025360T3H256JM-S	$2,598	P1S	217	1.15	23.3	91.7	21.969	575	9
		3600	256JM	025360T3E256JM	$2,598	P1C	264	1.15	29.8	91.7	23.902	230/460	
		3600	256JM	025360T3H256JM	$2,598	P1C	263	1.15	23.8	91.7	23.902	575	
		1800	284JM	025180T3E284JM	$2,912	P1C	400	1.15	29.9	93.6	24.261	230/460	
		1800	284JM	025180T3H284JM	$2,912	P1C	400	1.15	23.9	93.6	24.261	575	
		1200	324JM	025120T3E324JM	$4,306	P1C	515	1.15	30.4	93.0	26.431	230/460	
30	22	3600	284JM	030360T3E284JM	$3,185	P1C	374	1.15	34.7	92.4	24.261	230/460	
		3600	284JM	030360T3H284JM	$3,185	P1C	373	1.15	27.8	92.4	24.261	575	
		3600	284JM	030360T3V284JM	$3,185	P1C	373	1.15	39.9	92.4	24.261	200/400	
		1800	286JM	030180T3E286JM	$3,368	P1C	454	1.15	35.4	94.1	25.754	230/460	
		1800	286JM	030180T3H286JM	$3,368	P1C	452	1.15	28.3	94.1	25.754	575	
		1200	326JM	030120T3E326JM	$4,741	P1C	578	1.15	36.0	93.6	27.927	230/460	

continued on next page

Please refer to back cover for description of "NOTES"

For detailed specifications, data sheets, drawings and performance curves visit http://www.weg.net

CLOSE-COUPLED PUMP ODP MOTORS

JM - ODP - Three Phase - *continued*

HP	kW	RPM	Frame	Catalog Number	List Price	Mult. Symbol	Approx. Shipping Weight (lbs)	Service Factor	FL Amps @ High	FL. Eff (%)	"C" Dimension (in)	Voltage (V)	Notes
40	30	3600	286JM	040360T3E286JM	$3,811	P1C	412	1.15	47.1	93.0	25.754	230/460	
		3600	286JM	040360T3H286JM	$3,811	P1C	411	1.15	37.7	93.0	25.754	575	
		1800	324JM	040180T3E324JM	$3,797	P1C	524	1.15	48.2	94.1	26.431	230/460	
		1800	324JM	040180T3H324JM	$3,797	P1C	521	1.15	38.6	94.1	26.431	575	
		1200	364/5JM	040120T3E364JM	$6,696	P1C	928	1.15	47.1	94.1	29.139	230/460	
50	37	3600	324JM	050360T3E324JM	$4,607	P1C	530	1.15	59.1	93.6	26.431	230/460	
		3600	324JM	050360T3G324JM	$4,607	P1C	523	1.15	59.1	93.6	26.431	460	
		3600	324JM	050360T3H324JM	$4,607	P1C	524	1.15	47.3	93.6	26.431	575	
		1800	326JM	050180T3E326JM	$4,877	P1C	594	1.15	59.9	94.5	27.927	230/460	
		1800	326JM	050180T3H326JM	$4,877	P1C	597	1.15	47.9	94.5	27.927	575	
		1200	364/5JM	050120T3E365JM	$7,666	P1C	976	1.15	60.2	94.1	29.139	230/460	
60	45	3600	326JM	060360T3E326JM	$5,432	P1C	569	1.15	71.0	93.6	27.927	230/460	
		3600	326JM	060360T3G326JM	$5,432	P1C	653	1.15	71.0	93.6	27.927	460	
		3600	326JM	060360T3H326JM	$5,432	P1C	565	1.15	56.8	93.6	27.927	575	
		1800	364/5JM	060180T3E364JM	$5,994	P1C	907	1.15	69.9	95.0	29.139	230/460	
		1800	364/5JM	060180T3G364JM	$5,994	P1C	906	1.15	69.9	95.0	29.139	460	
		1800	364/5JM	060180T3H364JM	$5,994	P1C	964	1.15	55.9	95.0	29.139	575	
75	55	3600	364/5JM	075360T3E364JM	$6,951	P1C	866	1.15	83.4	94.1	29.139	230/460	
		3600	364/5JM	075360T3G364JM	$6,951	P1C	847	1.15	83.4	94.1	29.139	460	
		3600	364/5JM	075360T3H364JM	$6,951	P1C	860	1.15	66.7	94.1	29.139	575	
		1800	364/5JM	075180T3E365JM	$6,932	P1C	965	1.15	85.5	95.0	29.139	230/460	
		1800	364/5JM	075180T3G365JM	$6,932	P1C	962	1.15	85.5	95.0	29.139	460	
		1800	364/5JM	075180T3H365JM	$6,932	P1C	965	1.15	68.4	95.0	29.139	575	
100	75	3600	364/5JM	100360T3E365JM	$8,683	P1C	925	1.15	112	94.5	29.139	230/460	
		3600	364/5JM	100360T3G365JM	$8,683	P1C	906	1.15	112	94.5	29.139	460	

Please refer to back cover for description of "NOTES"

For detailed specifications, data sheets, drawings and performance curves visit http://www.weg.net

Data subject to change without notice.

JM - ODP - Three Phase - Footless Vertical

HP	kW	RPM	Frame	Catalog Number	List Price	Mult. Symbol	Approx. Shipping Weight (lbs)	Service Factor	FL Amps @ High	FL. Eff (%)	"C" Dimension (in)	Voltage (V)	Notes
1	0.75	1800	143/5JM	00118OT3E143JMV-S	$541	P1S	40	1.15	1.50	85.5	15.001	230/460	9;15
		1200	143/5JM	00112OT3E145JMV-S	$605	P1S	40	1.15	1.70	82.5	15.001	230/460	9;15
1.5	1.1	3600	143/5JM	00156OT3E143JMV-S	$589	P1S	35	1.15	1.90	84.0	15.001	230/460	9;15
		1800	143/5JM	00158OT3E145JMV-S	$608	P1S	47	1.15	2.10	86.5	16.182	230/460	9;15
		1200	182/4JM	00152OT3E182JMV-S	$827	P1S	71	1.15	2.30	86.5	16.812	230/460	9;15
2	1.5	3600	143/5JM	00236OT3E145JMV-S	$635	P1S	42	1.15	2.40	85.5	15.394	230/460	9;15
		1800	143/5JM	00218OT3E145JMV-S	$662	P1S	44	1.15	2.70	86.5	16.182	230/460	9;15
		1200	182/4JM	00212OT3E184JMV-S	$874	P1S	83	1.15	3.00	87.5	17.600	230/460	9;15
3	2.2	3600	143/5JM	00336OT3E145JMV-S	$715	P1S	45	1.15	3.60	85.5	15.788	230/460	9;15
		1800	182/4JM	00318OT3E182JMV-S	$723	P1S	84	1.15	3.90	89.5	17.994	230/460	9;15
		1200	213/5JM	00312OT3E213JMV-S	$1,187	P1S	123	1.15	4.20	88.5	18.977	230/460	9;15
5	3.7	3600	182/4JM	00536OT3E182JMV-S	$838	P1S	75	1.15	6.10	86.5	17.600	230/460	9;15
		1800	182/4JM	00518OT3E184JMV-S	$907	P1S	96	1.15	6.30	89.5	19.175	230/460	9;15
		1200	213/5JM	00512OT3E215JMV-S	$1,401	P1S	144	1.15	6.70	89.5	19.370	230/460	9;15
7.5	5.5	3600	182/4JM	00736OT3E184JMV-S	$1,144	P1S	87	1.15	8.70	88.5	17.994	230/460	9;15
		3600	182/4JM	00736OT3H184JMV-S	$1,144	P1S	87	1.15	6.90	88.5	17.994	575	9;15
		3600	182/4JM	00736OT3V184JMV-S	$1,144	P1S	87	1.15	10.0	88.5	17.994	200/400	9;15
		1800	213/5JM	00718OT3E213JMV-S	$1,201	P1S	135	1.15	9.30	91.0	18.977	230/460	9;15
10	7.5	3600	213/5JM	01036OT3E213JMV-S	$1,371	P1S	132	1.15	12.0	89.5	19.370	230/460	9;15
		3600	213/5JM	01036OT3H213JMV-S	$1,371	P1S	132	1.15	9.60	89.5	19.370	575	9;15
		3600	213/5JM	01036OT3V213JMV-S	$1,371	P1S	132	1.15	13.8	89.5	19.370	200/400	9;15
		1800	213/5JM	01018OT3E215JMV-S	$1,446	P1S	140	1.15	12.4	91.7	18.977	230/460	9;15
		1800	213/5JM	01018OT3H215JMV-S	$1,448	P1S	140	1.15	9.90	91.7	18.977	575	9;15
15	11	3600	213/5JM	01536OT3E215JMV-S	$1,789	P1S	151	1.15	17.2	90.2	20.158	230/460	9;15
		3600	213/5JM	01536OT3H215JMV-S	$1,789	P1S	151	1.15	13.8	90.2	20.158	575	9;15
		3600	213/5JM	01536OT3V215JMV-S	$1,789	P1S	151	1.15	19.8	90.2	20.158	200/400	9;15
		1800	254/6JM	01518OT3E254JMV-S	$2,147	P1S	175	1.15	18.6	93.0	23.898	230/460	9;15
20	15	3600	254JM	02036OT3E254JMV	$2,268	P1C	228	1.15	24.6	91.0	24.098	230/460	15
		3600	254JM	02036OT3H254JMV	$2,268	P1C	277	1.15	19.7	91.0	24.098	575	15
		3600	254JM	02036OT3V254JMV	$2,268	P1C	277	1.15	28.3	91.0	24.098	200/400	15
		3600	254/6JM	02036OT3E254JMV-S	$2,205	P1S	206	1.15	23.8	91.0	23.359	230/460	9;15
		3600	254/6JM	02036OT3H254JMV-S	$2,205	P1S	206	1.15	19.0	91.0	23.359	575	9;15
		3600	254/6JM	02036OT3V254JMV-S	$2,205	P1S	206	1.15	27.4	91.0	23.359	200/400	9;15
		1800	254/6JM	02018OT3E256JMV-S	$2,580	P1S	198	1.15	25.0	93.0	23.898	230/460	9;15
		1800	256JM	02018OT3E256JMV	$2,590	P1C	254	1.15	24.7	93.0	25.831	230/460	15
25	18.5	3600	254/6JM	02536OT3E256JMV-S	$2,696	P1S	217	1.15	29.1	91.7	23.359	230/460	9;15
		3600	254/6JM	02536OT3H256JMV-S	$2,696	P1S	217	1.15	23.3	91.7	23.359	575	9;15
		3600	254/6JM	02536OT3V256JMV-S	$2,696	P1S	217	1.15	33.5	91.7	23.359	200/400	9;15
		3600	256JM	02536OT3H256JMV	$2,774	P1C	308	1.15	23.8	91.7	25.831	575	15
		3600	256JM	02536OT3V256JMV	$2,774	P1C	271	1.15	34.3	91.7	25.831	200/400	15
		1800	284JM	02518OT3E284JMV	$3,137	P1C	342	1.15	29.9	93.6	26.584	230/460	15
30	22	3600	284JM	03036OT3H284JMV	$3,422	P1C	379	1.15	27.8	92.4	26.584	575	15
		1800	286JM	03018OT3H286JMV	$3,610	P1C	467	1.15	28.3	94.1	28.077	575	15
40	30	3600	286JM	04036OT3E286JMV	$4,066	P1C	423	1.15	47.1	93.0	28.077	230/460	15
		3600	286JM	04036OT3H286JMV	$4,066	P1C	422	1.15	37.7	93.0	28.077	575	15
		1800	324JM	04018OT3E324JMV	$4,431	P1C	485	1.15	48.2	94.1	29.147	230/460	15
50	37	3600	324JM	05036OT3E324JMV	$4,911	P1C	531	1.15	59.1	93.6	29.147	230/460	15
		3600	324JM	05036OT3H324JMV	$4,911	P1C	530	1.15	47.3	93.6	29.147	575	15
		3600	324JM	05036OT3V324JMV	$4,911	P1C	614	1.15	68.0	93.6	29.147	200/400	15
		1800	326JM	05018OT3H326JMV	$5,189	P1C	644	1.15	47.9	94.5	30.643	575	15
60	45	3600	326JM	06036OT3H326JMV	$5,761	P1C	577	1.15	56.8	93.6	30.643	575	15
75	55	3600	364/5JM	07536OT3H364JMV	$7,351	P1C	667	1.15	66.7	94.1	32.328	575	15

Please refer to back cover for description of "NOTES"

For detailed specifications, data sheets, drawings and performance curves visit http://www.weg.net

Data subject to change without notice.

CLOSE-COUPLED PUMP ODP MOTORS

JP - ODP - Three Phase

HP	kW	RPM	Frame	Catalog Number	List Price	Mult. Symbol	Approx. Shipping Weight (lbs)	Service Factor	FL Amps @ High	FL. Eff (%)	"C" Dimension (in)	Voltage (V)	Notes
1	0.75	1800	143/5JP	001180T3E143JP-S	$486	P1S	40	1.15	1.50	85.5	16.772	230/460	9
		1200	143/5JP	001120T3E145JP-S	$550	P1S	48	1.15	1.70	82.5	16.772	230/460	9
1.5	1.1	3600	143/5JP	001560T3E143JP-S	$534	P1S	35	1.15	1.90	84.0	16.772	230/460	9
		3600	143/5JP	001560T3V143JP-S	$534	P1S	35	1.15	2.10	84.0	16.772	200/400	9
		1800	143/5JP	001580T3E145JP-S	$553	P1S	47	1.15	2.10	86.5	17.953	230/460	9
		1200	182/4JP	001520T3E182JP-S	$729	P1S	77	1.15	2.30	86.5	18.543	230/460	9
2	1.5	3600	143/5JP	002360T3E145JP-S	$580	P1S	42	1.15	2.40	85.5	17.165	230/460	9
		3600	143/5JP	002360T3V145JP-S	$580	P1S	42	1.15	2.80	85.5	17.165	200/400	9
		1800	143/5JP	002180T3E145JP-S	$607	P1S	45	1.15	2.70	86.5	17.953	230/460	9
		1200	182/4JP	002120T3E184JP-S	$863	P1S	86	1.15	3.00	87.5	19.331	230/460	9
3	2.2	3600	143/5JP	003360T3E145JP-S	$660	P1S	45	1.15	3.60	85.5	17.559	230/460	9
		3600	143/5JP	003360T3H145JP-S	$660	P1S	45	1.15	2.90	85.5	17.559	575	9
		3600	143/5JP	003360T3V145JP-S	$660	P1S	45	1.15	4.10	85.5	17.559	200/400	9
		1800	182/4JP	003180T3E182JP-S	$665	P1S	85	1.15	3.90	89.5	19.724	230/460	9
		1800	182/4JP	003180T3H182JP-S	$665	P1S	85	1.15	3.10	89.5	19.724	575	9
		1200	213/5JP	003120T3E213JP-S	$1,095	P1S	132	1.15	4.20	88.5	21.575	230/460	9
5	3.7	3600	182/4JP	005360T3E182JP-S	$792	P1S	74	1.15	6.10	86.5	19.331	230/460	9
		3600	182/4JP	005360T3H182JP-S	$792	P1S	74	1.15	4.90	86.5	19.331	575	9
		3600	182/4JP	005360T3V182JP-S	$792	P1S	74	1.15	7.00	86.5	19.331	200/400	9
		1800	182/4JP	005180T3E184JP-S	$848	P1S	99	1.15	6.30	89.5	20.906	230/460	9
		1800	182/4JP	005180T3H184JP-S	$848	P1S	99	1.15	5.10	89.5	20.906	575	9
		1200	213/5JP	005120T3E215JP-S	$1,321	P1S	132	1.15	6.70	89.5	21.969	230/460	9
7.5	5.5	3600	182/4JP	007360T3E184JP-S	$1,086	P1S	89	1.15	8.70	88.5	19.724	230/460	9
		3600	182/4JP	007360T3H184JP-S	$1,086	P1S	89	1.15	6.90	88.5	19.724	575	9
		3600	182/4JP	007360T3V184JP-S	$1,086	P1S	89	1.15	10.0	88.5	19.724	200/400	9
		1800	213/5JP	007180T3E213JP-S	$1,120	P1S	144	1.15	9.30	91.0	21.575	230/460	9
		1800	213/5JP	007180T3H213JP-S	$1,120	P1S	144	1.15	7.40	91.0	21.575	575	9
		1800	213/5JP	007180T3V213JP-S	$1,120	P1S	144	1.15	10.6	91.0	21.575	200/400	9
		1200	254JP	007120T3E254JP	$2,113	P1C	253	1.15	9.69	90.2	25.049	230/460	
		1200	254/6JP	007120T3E254JP-S	$2,113	P1S	226	1.15	10.2	90.2	24.843	230/460	9
10	7.5	3600	213/5JP	010360T3E213JP-S	$1,289	P1S	144	1.15	12.0	89.5	21.969	230/460	9
		3600	213/5JP	010360T3H213JP-S	$1,289	P1S	144	1.15	9.60	89.5	21.969	575	9
		3600	213/5JP	010360T3V213JP-S	$1,289	P1S	144	1.15	13.8	89.5	21.969	200/400	9
		1800	213/5JP	010180T3E215JP-S	$1,366	P1S	149	1.15	12.4	91.7	21.575	230/460	9
		1800	213/5JP	010180T3H215JP-S	$1,366	P1S	149	1.15	9.90	91.7	21.575	575	9
		1800	213/5JP	010180T3V215JP-S	$1,366	P1S	149	1.15	14.3	91.7	21.575	200/400	9
		1200	254/6JP	010120T3E256JP-S	$2,298	P1S	254	1.15	13.9	91.7	24.843	230/460	9
		1200	256JP	010120T3E256JP	$2,298	P1C	271	1.15	12.8	91.7	26.782	230/460	

continued on next page

Please refer to back cover for description of "NOTES"

For detailed specifications, data sheets, drawings and performance curves visit http://www.weg.net

Data subject to change without notice.

JP - ODP - Three Phase - *continued*

HP	kW	RPM	Frame	Catalog Number	List Price	Mult. Symbol	Approx. Shipping Weight (lbs)	Service Factor	FL Amps @ High	FL. Eff (%)	"C" Dimension (in)	Voltage (V)	Notes
15	11	3600	213/5JP	01536OT3E215JP-S	$1,707	P1S	160	1.15	17.2	90.2	22.756	230/460	9
		3600	213/5JP	01536OT3H215JP-S	$1,707	P1S	160	1.15	13.8	90.2	22.756	575	9
		3600	213/5JP	01536OT3V215JP-S	$1,707	P1S	160	1.15	19.8	90.2	22.756	200/400	9
		1800	254JP	01518OT3E254JP	$1,995	P1C	270	1.15	18.6	93.0	25.049	230/460	
		1800	254JP	01518OT3H254JP	$1,995	P1C	269	1.15	14.9	93.0	25.049	575	
		1800	254/6JP	01518OT3E254JP-S	$1,995	P1S	228	1.15	18.6	93.0	24.843	230/460	9
		1800	254/6JP	01518OT3H254JP-S	$1,995	P1S	228	1.15	14.9	93.0	24.843	575	9
		1200	284JP	01512OT3E284JP	$3,163	P1C	389	1.15	17.7	91.7	27.141	230/460	
20	15	3600	254JP	02036OT3E254JP	$2,106	P1C	227	1.15	24.6	91.0	25.049	230/460	
		3600	254JP	02036OT3H254JP	$2,106	P1C	225	1.15	19.7	91.0	25.049	575	
		3600	254JP	02036OT3V254JP	$2,106	P1C	278	1.15	28.3	91.0	25.049	200/400	
		3600	254/6JP	02036OT3E254JP-S	$2,106	P1S	204	1.15	23.8	91.0	24.843	230/460	9
		3600	254/6JP	02036OT3H254JP-S	$2,106	P1S	204	1.15	19.0	91.0	24.843	575	9
		3600	254/6JP	02036OT3V254JP-S	$2,106	P1S	204	1.15	27.4	91.0	24.843	200/400	9
		1800	254/6JP	02018OT3E256JP-S	$2,413	P1S	252	1.15	25.0	93.0	24.843	230/460	9
		1800	254/6JP	02018OT3H256JP-S	$2,413	P1S	252	1.15	20.0	93.0	24.843	575	9
		1800	256JP	02018OT3E256JP	$2,413	P1C	307	1.15	24.7	93.0	26.782	230/460	
		1800	256JP	02018OT3H256JP	$2,413	P1C	320	1.15	19.8	93.0	26.782	575	
		1200	286JP	02012OT3E286JP	$3,871	P1C	424	1.15	24.0	92.4	28.634	230/460	
25	18.5	3600	254/6JP	02536OT3E256JP-S	$2,599	P1S	218	1.15	29.1	91.7	24.843	230/460	9
		3600	254/6JP	02536OT3H256JP-S	$2,599	P1S	218	1.15	23.3	91.7	24.843	575	9
		3600	254/6JP	02536OT3V256JP-S	$2,599	P1S	218	1.15	33.5	91.7	24.843	200/400	9
		3600	256JP	02536OT3E256JP	$2,599	P1C	268	1.15	29.8	91.7	26.782	230/460	
		3600	256JP	02536OT3H256JP	$2,599	P1C	310	1.15	23.8	91.7	26.782	575	
		3600	256JP	02536OT3V256JP	$2,599	P1C	310	1.15	34.3	91.7	26.782	200/400	
		1800	284JP	02518OT3E284JP	$2,911	P1C	403	1.15	29.9	93.6	27.141	230/460	
		1800	284JP	02518OT3H284JP	$2,911	P1C	403	1.15	23.9	93.6	27.141	575	
		1200	324JP	02512OT3E324JP	$4,306	P1C	517	1.15	30.4	93.0	29.311	230/460	
30	22	3600	284JP	03036OT3E284JP	$3,185	P1C	377	1.15	34.7	92.4	27.141	230/460	
		3600	284JP	03036OT3H284JP	$3,185	P1C	367	1.15	27.8	92.4	27.141	575	
		3600	284JP	03036OT3V284JP	$3,185	P1C	422	1.15	39.9	92.4	27.141	200/400	
		1800	286JP	03018OT3E286JP	$3,367	P1C	457	1.15	35.4	94.1	28.634	230/460	
		1800	286JP	03018OT3H286JP	$3,367	P1C	453	1.15	28.3	94.1	28.634	575	
		1800	286JP	03018OT3V286JP	$3,367	P1C	457	1.15	40.7	94.1	28.634	200/400	
		1200	326JP	03012OT3E326JP	$4,980	P1C	603	1.15	36.0	93.6	30.807	230/460	
40	30	3600	286JP	04036OT3E286JP	$3,811	P1C	415	1.15	47.1	93.0	28.634	230/460	
		3600	286JP	04036OT3H286JP	$3,811	P1C	414	1.15	37.7	93.0	28.634	575	
		3600	286JP	04036OT3V286JP	$3,811	P1C	533	1.15	54.2	93.0	28.634	200/400	
		1800	324JP	04018OT3E324JP	$3,797	P1C	521	1.15	48.2	94.1	29.311	230/460	
		1800	324JP	04018OT3H324JP	$3,797	P1C	519	1.15	38.6	94.1	29.311	575	
		1800	324JP	04018OT3V324JP	$3,797	P1C	576	1.15	55.4	94.1	29.311	200/400	
		1200	364/5JP	04012OT3E364JP	$7,444	P1C	853	1.15	47.1	94.1	32.019	230/460	

continued on next page

Please refer to back cover for description of "NOTES"

For detailed specifications, data sheets, drawings and performance curves visit http://www.weg.net

CLOSE-COUPLED PUMP ODP MOTORS

JP - ODP - Three Phase - *continued*

HP	kW	RPM	Frame	Catalog Number	List Price	Mult. Symbol	Approx. Shipping Weight (lbs)	Service Factor	FL Amps @ High	FL. Eff (%)	"C" Dimension (in)	Voltage (V)	Notes
50	37	3600	324JP	050360T3E324JP	$4,607	P1C	527	1.15	59.1	93.6	29.311	230/460	
		3600	324JP	050360T3G324JP	$4,607	P1C	526	1.15	59.1	93.6	29.311	460	
		3600	324JP	050360T3H324JP	$4,607	P1C	526	1.15	47.3	93.6	29.311	575	
		3600	324JP	050360T3V324JP	$4,607	P1C	528	1.15	68.0	93.6	29.311	200/400	
		1800	326JP	050180T3E326JP	$4,878	P1C	591	1.15	59.9	94.5	30.807	230/460	
		1800	326JP	050180T3H326JP	$4,878	P1C	600	1.15	47.9	94.5	30.807	575	
		1200	364/5JP	050120T3E365JP	$7,666	P1C	959	1.15	58.8	94.1	32.019	230/460	
60	45	3600	326JP	060360T3E326JP	$5,432	P1C	565	1.15	71.0	93.6	30.807	230/460	
		3600	326JP	060360T3G326JP	$5,432	P1C	564	1.15	71.0	93.6	30.807	460	
		3600	326JP	060360T3H326JP	$5,432	P1C	572	1.15	56.8	93.6	30.807	575	
		3600	326JP	060360T3V326JP	$5,432	P1C	629	1.15	81.7	93.6	30.807	200/400	
		1800	364/5JP	060180T3E364JP	$5,994	P1C	911	1.15	69.9	95.0	32.019	230/460	
		1800	364/5JP	060180T3G364JP	$5,994	P1C	966	1.15	69.9	95.0	32.019	460	
		1800	364/5JP	060180T3H364JP	$5,994	P1C	896	1.15	55.9	95.0	32.019	575	
		1200	404/5JP	060120T3E404JP	$9,462	P1C	1035	1.15	70.3	94.5	35.263	230/460	
75	55	3600	364/5JP	075360T3E364JP	$7,699	P1C	870	1.15	83.4	94.1	32.019	230/460	
		3600	364/5JP	075360T3G364JP	$7,699	P1C	809	1.15	83.4	94.1	32.019	460	
		3600	364/5JP	075360T3H364JP	$7,699	P1C	864	1.15	66.7	94.1	32.019	575	
		3600	364/5JP	075360T3V364JP	$7,699	P1C	871	1.15	95.9	94.1	32.019	200/400	
		1800	364/5JP	075180T3E365JP	$6,932	P1C	977	1.15	83.5	95.0	32.019	230/460	
		1800	364/5JP	075180T3G365JP	$6,932	P1C	963	1.15	83.5	95.0	32.019	460	
		1800	364/5JP	075180T3H365JP	$6,932	P1C	966	1.15	66.8	95.0	32.019	575	
		1200	404/5JP	075120T3E405JP	$9,762	P1C	1200	1.15	85.9	94.5	35.263	230/460	
100	75	3600	364/5JP	100360T3E365JP	$8,173	P1C	933	1.15	112	94.5	32.019	230/460	
		3600	364/5JP	100360T3G365JP	$8,173	P1C	927	1.15	112	94.5	32.019	460	
		1800	404/5JP	100180T3E404JP	$8,783	P1C	1102	1.15	113	95.4	35.263	230/460	
		1800	404/5JP	100180T3G404JP	$8,783	P1C	1102	1.15	113	95.4	35.263	460	
125	90	3600	404/5JP	125360T3G404JP	$10,563	P1C	1212	1.15	133	94.5	35.263	460	
		1800	404/5JP	125180T3G405JP	$10,317	P1C	1406	1.15	136	95.4	35.263	460	
150	110	3600	404/5JP	150360T3G405JP	$13,922	P1C	1337	1.15	162	94.5	35.263	460	

Please refer to back cover for description of "NOTES"

For detailed specifications, data sheets, drawings and performance curves visit http://www.weg.net

Data subject to change without notice.

JP - ODP - Three Phase - Footless Vertical

HP	kW	RPM	Frame	Catalog Number	List Price	Mult. Symbol	Approx. Shipping Weight (lbs)	Service Factor	FL Amps @ High	FL. Eff (%)	"C" Dimension (in)	Voltage (V)	Notes
1.5	1.1	3600	143/5JP	001560T3E143JPV-S	$589	P1S	35	1.15	1.90	84.0	18.072	230/460	9;15
2	1.5	3600	143/5JP	002360T3E145JPV-S	$635	P1S	42	1.15	2.40	85.5	18.465	230/460	9;15
3	2.2	3600	143/5JP	003360T3E145JPV-S	$715	P1S	45	1.15	3.60	85.5	18.859	230/460	9;15
5	3.7	3600	182/4JP	005360T3E182JPV-S	$850	P1S	74	1.15	6.10	86.5	20.671	230/460	9;15
7.5	5.5	3600	182/4JP	007360T3E184JPV-S	$1,144	P1S	89	1.15	8.70	88.5	21.064	230/460	9;15
		3600	182/4JP	007360T3V184JPV-S	$1,144	P1S	89	1.15	10.0	88.5	21.064	200/400	9;15
		1200	254/6JP	007120T3E254JPV-S	$2,211	P1S	226	1.15	10.2	90.2	26.233	230/460	9;15
10	7.5	3600	213/5JP	010360T3E213JPV-S	$1,371	P1S	144	1.15	12.0	89.5	23.229	230/460	9;15
		3600	213/5JP	010360T3H213JPV-S	$1,371	P1S	144	1.15	9.60	89.5	23.229	575	9;15
		3600	213/5JP	010360T3V213JPV-S	$1,371	P1S	144	1.15	13.8	89.5	23.229	200/400	9;15
		1200	254/6JP	010120T3E256JPV-S	$2,396	P1S	254	1.15	13.9	91.7	26.233	230/460	9;15
15	11	3600	213/5JP	015360T3E215JPV-S	$1,789	P1S	160	1.15	17.2	90.2	24.016	230/460	9;15
		3600	213/5JP	015360T3H215JPV-S	$1,789	P1S	160	1.15	13.8	90.2	24.016	575	9;15
		3600	213/5JP	015360T3V215JPV-S	$1,789	P1S	160	1.15	19.8	90.2	24.016	200/400	9;15
		1800	254/6JP	015180T3V254JPV-S	$2,093	P1S	228	1.15	21.4	93.0	26.233	200/400	9;15
		1200	284JP	015120T3E284JPV	$3,399	P1C	422	1.15	17.7	91.7	29.464	230/460	15
20	15	3600	254/6JP	020360T3E254JPV-S	$2,204	P1S	208	1.15	23.8	91.0	26.233	230/460	9;15
		3600	254/6JP	020360T3H254JPV-S	$2,204	P1S	208	1.15	19.0	91.0	26.233	575	9;15
		3600	254/6JP	020360T3V254JPV-S	$2,204	P1S	208	1.15	27.4	91.0	26.233	200/400	9;15
		1800	254/6JP	020180T3E256JPV-S	$2,580	P1S	198	1.15	25.0	93.0	26.772	230/460	9;15
25	18.5	3600	254/6JP	025360T3E256JPV-S	$2,697	P1S	222	1.15	29.1	91.7	26.233	230/460	9;15
		3600	254/6JP	025360T3H256JPV-S	$2,697	P1S	222	1.15	23.3	91.7	26.233	575	9;15
		3600	254/6JP	025360T3V256JPV-S	$2,697	P1S	222	1.15	33.5	91.7	26.233	200/400	9;15
		1800	284JP	025180T3E284JPV	$3,137	P1C	370	1.15	29.9	93.6	29.464	230/460	15
30	22	3600	284JP	030360T3E284JPV	$3,422	P1C	381	1.15	34.7	92.4	29.464	230/460	15
		3600	284JP	030360T3H284JPV	$3,422	P1C	380	1.15	27.8	92.4	29.464	575	15
		3600	284JP	030360T3V284JPV	$3,422	P1C	381	1.15	39.9	92.4	29.464	200/400	15
		1800	286JP	030180T3E286JPV	$3,609	P1C	415	1.15	35.4	94.1	30.957	230/460	15
40	30	3600	286JP	040360T3E286JPV	$4,066	P1C	425	1.15	47.1	93.0	30.957	230/460	15
		3600	286JP	040360T3V286JPV	$4,066	P1C	425	1.15	54.2	93.0	30.957	200/400	15
		1800	324JP	040180T3E324JPV	$4,077	P1C	527	1.15	48.2	94.1	32.027	230/460	15
		1800	324JP	040180T3V324JPV	$4,077	P1C	527	1.15	55.4	94.1	32.027	200/400	15

continued on next page

Please refer to back cover for description of "NOTES"

For detailed specifications, data sheets, drawings and performance curves visit http://www.weg.net

CLOSE-COUPLED PUMP ODP MOTORS

JP - ODP - Three Phase - Footless Vertical - *continued*

HP	kW	RPM	Frame	Catalog Number	List Price	Mult. Symbol	Approx. Shipping Weight (lbs)	Service Factor	FL Amps @ High	FL. Eff (%)	"C" Dimension (in)	Voltage (V)	Notes
50	37	3600	324JP	050360T3E324JPV	$4,911	P1C	533	1.15	59.1	93.6	32.027	230/460	15
		3600	324JP	050360T3H324JPV	$4,911	P1C	532	1.15	47.3	93.6	32.027	575	15
		3600	324JP	050360T3V324JPV	$4,911	P1C	534	1.15	68.0	93.6	32.027	200/400	15
		1800	326JP	050180T3E326JPV	$5,190	P1C	606	1.15	59.9	94.5	33.523	230/460	15
		1800	326JP	050180T3V326JPV	$5,190	P1C	655	1.15	68.9	94.5	33.523	200/400	15
60	45	3600	326JP	060360T3E326JPV	$5,761	P1C	581	1.15	71.0	93.6	33.523	230/460	15
		3600	326JP	060360T3V326JPV	$5,761	P1C	583	1.15	81.7	93.6	33.523	200/400	15
		1800	364/5JP	060180T3E364JPV	$6,365	P1C	921	1.15	69.9	95.0	35.208	230/460	15
		1800	364/5JP	060180T3V364JPV	$6,365	P1C	922	1.15	80.4	95.0	35.208	200/400	15
75	55	3600	364/5JP	075360T3E364JPV	$8,121	P1C	880	1.15	83.4	94.1	35.208	230/460	15
		3600	364/5JP	075360T3H364JPV	$8,121	P1C	884	1.15	66.7	94.1	35.208	575	15
		3600	364/5JP	075360T3V364JPV	$8,121	P1C	881	1.15	95.9	94.1	35.208	200/400	15
		1800	364/5JP	075180T3E365JPV	$7,331	P1C	987	1.15	83.5	95.0	35.208	230/460	15
		1800	364/5JP	075180T3V365JPV	$7,331	P1C	988	1.15	96.0	95.0	35.208	200/400	15
100	75	3600	364/5JP	100360T3E365JPV	$8,609	P1C	943	1.15	112	94.5	35.208	230/460	15
		3600	364/5JP	100360T3H365JPV	$8,609	P1C	924	1.15	89.6	94.5	35.208	575	15
		3600	364/5JP	100360T3V365JPV	$8,609	P1C	941	1.15	129	94.5	35.208	200/400	15
		1800	404/5JP	100180T3E404JPV	$9,237	P1C	1084	1.15	113	95.4	38.452	230/460	15
		1800	404/5JP	100180T3V404JPV	$9,237	P1C	1085	1.15	130	95.4	38.452	200/400	15

Please refer to back cover for description of "NOTES"

For detailed specifications, data sheets, drawings and performance curves visit http://www.weg.net

Data subject to change without notice.

CLOSE-COUPLED PUMP TEFC MOTORS - WITH INTERNAL AEGIS® SGR

JM - TEFC - Three Phase

HP	kW	RPM	Frame	Catalog Number	List Price	Mult. Symbol	Approx. Shipping Weight (lbs)	Service Factor	FL Amps @ High	FL. Eff (%)	"C" Dimension (in)	Voltage (V)	Notes
1	0.75	1800	143/5JM	00118ET3E143JM-SG	$764	P1S	45	1.15	1.50	85.5	16.102	230/460	9;34
		1800	143/5JM	00118ET3H143JM-SG	$764	P1S	45	1.15	1.20	85.5	16.102	575	9;34
1.5	1.1	3600	143/5JM	00156ET3E143JM-SG	$850	P1S	41	1.15	1.90	84.0	15.709	230/460	9;34
		3600	143/5JM	00156ET3H143JM-SG	$850	P1S	41	1.15	1.50	84.0	15.709	575	9;34
		1800	143/5JM	00158ET3E145JM-SG	$793	P1S	47	1.15	2.00	86.5	16.102	230/460	9;34
		1800	143/5JM	00158ET3H145JM-SG	$793	P1S	47	1.15	1.60	86.5	16.102	575	9;34
2	1.5	3600	143/5JM	00236ET3E145JM-SG	$834	P1S	47	1.15	2.50	85.5	16.496	230/460	9;34
		3600	143/5JM	00236ET3H145JM-SG	$834	P1S	47	1.15	2.00	85.5	16.496	575	9;34
		1800	143/5JM	00218ET3E145JM-SG	$858	P1S	50	1.15	2.70	86.5	16.496	230/460	9;34
		1800	143/5JM	00218ET3H145JM-SG	$858	P1S	50	1.15	2.20	86.5	16.496	575	9;34
3	2.2	3600	182/4JM	00336ET3E182JM-SG	$1,103	P1S	81	1.15	3.70	86.5	17.835	230/460	9;34
		3600	182/4JM	00336ET3H182JM-SG	$1,103	P1S	81	1.15	2.90	86.5	17.835	575	9;34
		1800	182/4JM	00318ET3E182JM-SG	$1,211	P1S	87	1.15	3.80	89.5	19.409	230/460	9;34
		1800	182/4JM	00318ET3H182JM-SG	$1,211	P1S	101	1.15	3.10	89.5	19.409	575	9;34
5	3.7	3600	182/4JM	00536ET3E184JM-SG	$1,264	P1S	99	1.15	5.90	88.5	19.409	230/460	9;34
		3600	182/4JM	00536ET3H184JM-SG	$1,264	P1S	99	1.15	4.70	88.5	19.409	575	9;34
		1800	182/4JM	00518ET3E184JM-SG	$1,331	P1S	94	1.15	6.50	89.5	19.409	230/460	9;34
		1800	182/4JM	00518ET3H184JM-SG	$1,331	P1S	94	1.15	5.20	89.5	19.409	575	9;34
7.5	5.5	3600	213/5JM	00736ET3E213JM-SG	$1,645	P1S	152	1.15	8.70	89.5	21.220	230/460	9;34
		3600	213/5JM	00736ET3H213JM-SG	$1,645	P1S	152	1.15	6.90	89.5	21.220	575	9;34
		1800	213/5JM	00718ET3E213JM-SG	$1,743	P1S	139	1.15	9.10	91.7	20.039	230/460	9;34
		1800	213/5JM	00718ET3H213JM-SG	$1,743	P1S	139	1.15	7.30	91.7	20.039	575	9;34
10	7.5	3600	213/5JM	01036ET3E215JM-SG	$2,001	P1S	179	1.15	11.5	90.2	22.795	230/460	9;34
		3600	213/5JM	01036ET3H215JM-SG	$2,001	P1S	179	1.15	9.20	90.2	22.795	575	9;34
		1800	213/5JM	01018ET3E215JM-SG	$2,023	P1S	151	1.15	12.2	91.7	20.433	230/460	9;34
		1800	213/5JM	01018ET3H215JM-SG	$2,023	P1S	151	1.15	9.80	91.7	20.433	575	9;34
15	11	3600	213/5JM	01536ET3E215JM-SG	$2,258	P1S	178	1.15	17.0	91.0	22.795	230/460	9;34
		3600	213/5JM	01536ET3H215JM-SG	$2,258	P1S	178	1.15	13.6	91.0	22.795	575	9;34
		3600	254/6JM	01536ET3E254JM-SG	$2,909	P1S	216	1.15	17.4	91.0	24.055	230/460	9;34
		3600	254/6JM	01536ET3H254JM-SG	$2,909	P1S	216	1.15	13.9	91.0	24.055	575	9;34
		1800	254/6JM	01518ET3E254JM-SG	$2,933	P1S	249	1.15	18.2	92.4	24.055	230/460	9;34
		1800	254/6JM	01518ET3H254JM-SG	$2,933	P1S	249	1.15	14.6	92.4	24.055	575	9;34
20	15	3600	254/6JM	02036ET3E256JM-SG	$3,298	P1S	257	1.15	22.7	91.0	24.843	230/460	9;34
		3600	254/6JM	02036ET3H256JM-SG	$3,298	P1S	257	1.15	18.2	91.0	24.843	575	9;34
		1800	254/6JM	02018ET3E256JM-SG	$3,188	P1S	279	1.15	24.7	92.4	24.843	230/460	9;34
		1800	254/6JM	02018ET3H256JM-SG	$3,188	P1S	279	1.15	19.8	93.0	24.843	575	9;34

Please refer to back cover for description of "NOTES"

For detailed specifications, data sheets, drawings and performance curves visit http://www.weg.net

Pump Motors

CLOSE-COUPLED PUMP TEFC MOTORS - WITH INTERNAL AEGIS® SGR

JP - TEFC - Three Phase

HP	kW	RPM	Frame	Catalog Number	List Price	Mult. Symbol	Approx. Shipping Weight (lbs)	Service Factor	FL Amps @ High	FL. Eff (%)	"C" Dimension (in)	Voltage (V)	Notes
1	0.75	1800	143/5JP	00118ET3E143JP-SG	$764	P1S	50	1.15	1.50	85.5	19.173	230/460	9;34
1.5	1.1	3600	143/5JP	00156ET3E143JP-SG	$850	P1S	46	1.15	1.90	84.0	18.780	230/460	9;34
		1800	143/5JP	00158ET3E145JP-SG	$793	P1S	52	1.15	2.00	86.5	19.173	230/460	9;34
2	1.5	3600	143/5JP	00236ET3E145JP-SG	$834	P1S	52	1.15	2.50	85.5	19.567	230/460	9;34
		1800	143/5JP	00218ET3E145JP-SG	$858	P1S	55	1.15	2.70	86.5	19.567	230/460	9;34
3	2.2	3600	182/4JP	00336ET3E182JP-SG	$1,103	P1S	88	1.15	3.70	86.5	20.906	230/460	9;34
		1800	182/4JP	00318ET3E182JP-SG	$1,211	P1S	87	1.15	3.80	89.5	22.480	230/460	9;34
5	3.7	3600	182/4JP	00536ET3E184JP-SG	$1,264	P1S	106	1.15	5.90	88.5	22.480	230/460	9;34
		1800	182/4JP	00518ET3E184JP-SG	$1,331	P1S	105	1.15	6.50	89.5	22.480	230/460	9;34
7.5	5.5	3600	213/5JP	00736ET3E213JP-SG	$1,645	P1S	161	1.15	8.70	89.5	25.079	230/460	9;34
		1800	213/5JP	00718ET3E213JP-SG	$1,743	P1S	148	1.15	9.10	91.7	23.898	230/460	9;34
		1800	213/5JP	00718ET3H213JP-SG	$1,743	P1S	148	1.15	7.30	91.7	23.898	575	9;34
10	7.5	3600	213/5JP	01036ET3E215JP-SG	$2,001	P1S	184	1.15	11.5	90.2	26.654	230/460	9;34
		1800	213/5JP	01018ET3E215JP-SG	$2,023	P1S	160	1.15	12.2	91.7	24.291	230/460	9;34
		1800	213/5JP	01018ET3H215JP-SG	$2,023	P1S	160	1.15	9.80	91.7	24.291	575	9;34
15	11	3600	254/6JP	01536ET3E254JP-SG	$2,909	P1S	217	1.15	17.4	91.0	26.929	230/460	9;34
		1800	254/6JP	01518ET3E254JP-SG	$2,933	P1S	251	1.15	18.2	92.4	26.929	230/460	9;34
20	15	3600	254/6JP	02036ET3E256JP-SG	$3,298	P1S	258	1.15	22.7	91.0	27.717	230/460	9;34
		1800	254/6JP	02018ET3E256JP-SG	$3,188	P1S	281	1.15	24.7	93.0	27.717	230/460	9;34
50	37	1800	324/6JP	05018ET3E326JP-W22G	$7,024	P1	476	1.25	59.2	94.5	34.021	230/460	34

Please refer to back cover for description of "NOTES"

For detailed specifications, data sheets, drawings and performance curves visit http://www.weg.net

Data subject to change without notice.

CLOSE-COUPLED PUMP ODP MOTORS - WITH INTERNAL AEGIS® SGR

JM - ODP - Three Phase

HP	kW	RPM	Frame	Catalog Number	List Price	Mult. Symbol	Approx. Shipping Weight (lbs)	Service Factor	FL Amps @ High	FL. Eff (%)	"C" Dimension (in)	Voltage (V)	Notes
1	0.75	1800	143/5JM	00118OT3E143JM-SG	$626	P1S	40	1.15	1.50	85.5	13.701	230/460	9;34
		1800	143/5JM	00118OT3H143JM-SG	$626	P1S	40	1.15	1.20	85.5	13.701	575	9;34
1.5	1.1	3600	143/5JM	00156OT3E143JM-SG	$674	P1S	33	1.15	1.90	84.0	13.701	230/460	9;34
		3600	143/5JM	00156OT3H143JM-SG	$674	P1S	33	1.15	1.50	84.0	13.701	575	9;34
		1800	143/5JM	00158OT3E145JM-SG	$693	P1S	47	1.15	2.10	86.5	14.882	230/460	9;34
		1800	143/5JM	00158OT3H145JM-SG	$693	P1S	47	1.15	1.70	86.5	14.882	575	9;34
2	1.5	3600	143/5JM	00236OT3E145JM-SG	$720	P1S	40	1.15	2.40	85.5	14.094	230/460	9;34
		3600	143/5JM	00236OT3H145JM-SG	$720	P1S	40	1.15	1.90	85.5	14.094	575	9;34
		3600	143/5JM	00236OT3V145JM-SG	$720	P1S	40	1.15	2.80	85.5	14.094	200/400	9;34
		1800	143/5JM	00218OT3E145JM-SG	$747	P1S	44	1.15	2.70	86.5	14.882	230/460	9;34
		1800	143/5JM	00218OT3H145JM-SG	$747	P1S	44	1.15	2.20	86.5	14.882	575	9;34
3	2.2	3600	143/5JM	00336OT3E145JM-SG	$800	P1S	43	1.15	3.60	85.5	14.488	230/460	9;34
		3600	143/5JM	00336OT3H145JM-SG	$800	P1S	43	1.15	2.90	85.5	14.488	575	9;34
		3600	143/5JM	00336OT3V145JM-SG	$800	P1S	43	1.15	4.10	85.5	14.488	200/400	9;34
		1800	182/4JM	00318OT3E182JM-SG	$835	P1S	85	1.15	3.90	89.5	16.654	230/460	9;34
		1800	182/4JM	00318OT3H182JM-SG	$835	P1S	85	1.15	3.10	89.5	16.654	575	9;34
		1800	182/4JM	00318OT3V182JM-SG	$835	P1S	85	1.15	4.40	89.5	16.654	200/400	9;34
5	3.7	3600	182/4JM	00536OT3E182JM-SG	$962	P1S	70	1.15	6.10	86.5	16.260	230/460	9;34
		3600	182/4JM	00536OT3H182JM-SG	$962	P1S	70	1.15	4.90	86.5	16.260	575	9;34
		3600	182/4JM	00536OT3V182JM-SG	$962	P1S	70	1.15	7.00	86.5	16.260	200/400	9;34
		1800	182/4JM	00518OT3E184JM-SG	$1,019	P1S	96	1.15	6.30	89.5	17.835	230/460	9;34
		1800	182/4JM	00518OT3H184JM-SG	$1,019	P1S	96	1.15	5.10	89.5	17.835	575	9;34
7.5	5.5	3600	182/4JM	00736OT3E184JM-SG	$1,256	P1S	88	1.15	8.70	88.5	16.654	230/460	9;34
		3600	182/4JM	00736OT3H184JM-SG	$1,256	P1S	88	1.15	6.90	88.5	16.654	575	9;34
		1800	213/5JM	00718OT3E213JM-SG	$1,320	P1S	135	1.15	9.30	91.0	17.717	230/460	9;34
		1800	213/5JM	00718OT3H213JM-SG	$1,320	P1S	135	1.15	7.40	91.0	17.717	575	9;34
10	7.5	3600	213/5JM	01036OT3E213JM-SG	$1,489	P1S	135	1.15	12.0	89.5	18.110	230/460	9;34
		3600	213/5JM	01036OT3H213JM-SG	$1,489	P1S	135	1.15	9.60	89.5	18.110	575	9;34
		1800	213/5JM	01018OT3E215JM-SG	$1,566	P1S	140	1.15	12.4	91.7	17.717	230/460	9;34
		1800	213/5JM	01018OT3H215JM-SG	$1,566	P1S	140	1.15	9.90	91.7	17.717	575	9;34
15	11	3600	213/5JM	01536OT3E215JM-SG	$1,907	P1S	151	1.15	17.2	90.2	18.898	230/460	9;34
		3600	213/5JM	01536OT3H215JM-SG	$1,907	P1S	151	1.15	13.8	90.2	18.898	575	9;34
		1800	254/6JM	01518OT3E254JM-SG	$2,275	P1S	226	1.15	18.6	93.0	21.969	230/460	9;34
		1800	254/6JM	01518OT3H254JM-SG	$2,275	P1S	226	1.15	14.9	93.0	21.969	575	9;34
20	15	3600	254/6JM	02036OT3E254JM-SG	$2,387	P1S	202	1.15	23.8	91.0	21.969	230/460	9;34
		3600	254/6JM	02036OT3H254JM-SG	$2,387	P1S	202	1.15	19.0	91.0	21.969	575	9;34
		1800	254/6JM	02018OT3E256JM-SG	$2,693	P1S	250	1.15	25.0	93.0	21.969	230/460	9;34
		1800	254/6JM	02018OT3H256JM-SG	$2,693	P1S	250	1.15	20.0	93.0	21.969	575	9;34
25	18.5	3600	254/6JM	02536OT3E256JM-SG	$2,879	P1S	225	1.15	29.1	91.7	21.969	230/460	9;34
		3600	254/6JM	02536OT3H256JM-SG	$2,879	P1S	225	1.15	23.3	91.7	21.969	575	9;34

Please refer to back cover for description of "NOTES"

For detailed specifications, data sheets, drawings and performance curves visit http://www.weg.net

Pump Motors

CLOSE-COUPLED PUMP ODP MOTORS - WITH INTERNAL AEGIS® SGR

JP - ODP - Three Phase

HP	kW	RPM	Frame	Catalog Number	List Price	Mult. Symbol	Approx. Shipping Weight (lbs)	Service Factor	FL Amps @ High	FL. Eff (%)	"C" Dimension (in)	Voltage (V)	Notes
1	0.75	1800	143/5JP	001180T3E143JP-SG	$626	P1S	40	1.15	1.50	85.5	16.772	230/460	9;34
1.5	1.1	3600	143/5JP	001560T3E143JP-SG	$674	P1S	35	1.15	1.90	84.0	16.772	230/460	9;34
		1800	143/5JP	001580T3E145JP-SG	$693	P1S	47	1.15	2.10	86.5	17.953	230/460	9;34
2	1.5	3600	143/5JP	002360T3E145JP-SG	$720	P1S	42	1.15	2.40	85.5	17.165	230/460	9;34
		1800	143/5JP	002180T3E145JP-SG	$747	P1S	45	1.15	2.70	86.5	17.953	230/460	9;34
3	2.2	3600	143/5JP	003360T3E145JP-SG	$800	P1S	45	1.15	3.60	85.5	17.559	230/460	9;34
		1800	182/4JP	003180T3E182JP-SG	$835	P1S	85	1.15	3.90	89.5	19.724	230/460	9;34
5	3.7	3600	182/4JP	005360T3E182JP-SG	$962	P1S	74	1.15	6.10	86.5	19.331	230/460	9;34
		1800	182/4JP	005180T3E184JP-SG	$1,019	P1S	99	1.15	6.30	89.5	20.906	230/460	9;34
7.5	5.5	3600	182/4JP	007360T3E184JP-SG	$1,256	P1S	89	1.15	8.70	88.5	19.724	230/460	9;34
		1800	213/5JP	007180T3E213JP-SG	$1,320	P1S	144	1.15	9.30	91.0	21.575	230/460	9;34
		1800	213/5JP	007180T3H213JP-SG	$1,320	P1S	144	1.15	7.40	91.0	21.575	575	9;34
		1800	213/5JP	007180T3V213JP-SG	$1,320	P1S	144	1.15	10.6	91.0	21.575	200/400	9;34
10	7.5	3600	213/5JP	010360T3E213JP-SG	$1,489	P1S	144	1.15	12.0	89.5	21.969	230/460	9;34
		3600	213/5JP	010360T3H213JP-SG	$1,489	P1S	144	1.15	9.60	89.5	21.969	575	9;34
		1800	213/5JP	010180T3E215JP-SG	$1,566	P1S	149	1.15	12.4	91.7	21.575	230/460	9;34
		1800	213/5JP	010180T3H215JP-SG	$1,566	P1S	149	1.15	9.9	91.7	21.575	575	9;34
		1800	213/5JP	010180T3V215JP-SG	$1,566	P1S	149	1.15	14.3	91.7	21.575	200/400	9;34
15	11	3600	213/5JP	015360T3E215JP-SG	$1,907	P1S	160	1.15	17.2	90.2	22.756	230/460	9;34
		3600	213/5JP	015360T3H215JP-SG	$1,907	P1S	160	1.15	13.8	90.2	22.756	575	9;34
		1800	254/6JP	015180T3E254JP-SG	$2,275	P1S	228	1.15	18.6	93.0	24.843	230/460	9;34
20	15	3600	254/6JP	020360T3E254JP-SG	$2,387	P1S	204	1.15	23.8	91.0	24.843	230/460	9;34
		1800	254/6JP	020180T3E256JP-SG	$2,693	P1S	252	1.15	25.0	93.0	24.843	230/460	9;34
25	18.5	3600	254/6JP	025360T3E256JP-SG	$2,879	P1S	218	1.15	29.1	91.7	24.843	230/460	9;34
		1800	284JP	025180T3E284JP-G	$3,221	P1C	392	1.15	29.9	93.6	27.141	230/460	34

Please refer to back cover for description of "NOTES"

For detailed specifications, data sheets, drawings and performance curves visit http://www.weg.net

Data subject to change without notice.

Pump Motors

FIRE PUMP MOTORS

ODP and TEFC- Three Phase - High Efficiency

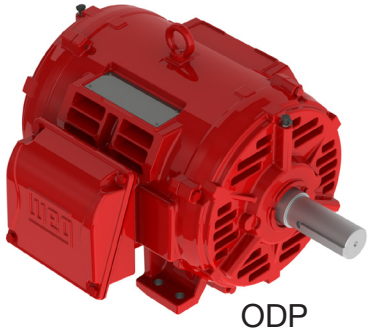

ODP

Inverter Rated:
1000:1 for variable torque

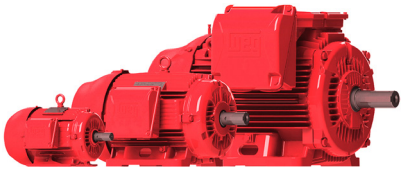

TEFC

WEG Open Drip Proof motors are designed to meet demanding applications in environments where dirt and humidity are minimal, with W22 as an option for more demanding environments. These motors are specifically designed to provide maximum ventilation and cool operation.

Features that make a difference:

- Class F insulation (Impregnation Resin and Magnet wire are class H)
- Class B Rise at 1.15 Service Factor
- F1 Mounted (Cast Iron Frame motors are F2 convertible)
- Stainless Steel Nameplate - Laser etched with high contrast background (Cast Iron Frames only)
- Cast Iron Frames: Regreasable ball bearings (Frames 254T and up)
- Rolled Steel Frames: ZZ ball bearings (Permanently lubricated)
- UL Listed for Fire Pump service
- 12 leads on 200/400V and 230/460V available on all frames.

ADDITIONAL TECHNICAL DATA

ELECTRICAL DATA: CONTACT WEG OR VISIT WWW.WEG.NET
MECHANICAL DATA: B-74

Pump Motors

FIRE PUMP MOTORS

ODP - Three Phase

HP	kW	RPM	Frame	Catalog Number	List Price	Mult. Symbol	Approx. Shipping Weight (lbs)	Service Factor	FL Amps @ High	FL. Eff (%)	"C" Dimension (in)	Voltage (V)	Notes
20	15	3600	254T	**020360P3EFP254T**	**$1,469**	W1B	229	1.15	24.3	90.2	20.669	230/460	30;31
		1800	256T	**020180P3EFP256T**	**$1,526**	W1B	263	1.15	25.5	91.0	22.401	230/460	30
25	18.5	3600	254/6T	**025360P3EFP256T-S**	**$1,783**	W1S	192	1.15	29.0	91.0	20.472	230/460	9;30
		3600	254/6T	**025360P3HFP256T-S**	**$1,783**	W1S	192	1.15	23.2	91.0	20.472	575	9;30
		3600	254/6T	**025360P3VFP256T-S**	**$1,783**	W1S	192	1.15	33.3	91.0	20.472	200/400	9;30
		3600	256T	**025360P3EFP256T**	**$1,783**	W1B	253	1.15	29.3	91.0	22.401	230/460	30
		3600	256T	**025360P3HFP256T**	**$1,783**	W1B	254	1.15	23.4	91.0	22.401	575	30
		1800	284TS	**025180P3EFP284TS**	**$1,799**	W1B	339	1.15	30.1	91.7	22.000	230/460	30
		1800	284TS	**025180P3VFP284TS**	**$1,799**	W1B	339	1.15	34.6	91.7	22.000	200/400	30
30	22	3600	284TS	**030360P3EFP284TS**	**$2,033**	W1B	338	1.15	34.5	91.0	22.000	230/460	30
		3600	284TS	**030360P3HFP284TS**	**$2,033**	W1B	338	1.15	27.6	91.0	22.000	575	30
		3600	284TS	**030360P3VFP284TS**	**$2,033**	W1B	338	1.15	39.7	91.0	22.000	200/400	30
		1800	286TS	**030180P3EFP286TS**	**$2,108**	W1B	371	1.15	35.6	92.4	23.504	230/460	30
		1800	286TS	**030180P3VFP286TS**	**$2,108**	W1B	371	1.15	40.9	92.4	23.504	200/400	30
40	30	3600	286TS	**040360P3EFP286TS**	**$2,757**	W1B	378	1.15	46.1	91.7	23.504	230/460	30
		3600	286TS	**040360P3HFP286TS**	**$2,757**	W1B	376	1.15	36.9	91.7	23.504	575	30
		3600	286TS	**040360P3VFP286TS**	**$2,757**	W1B	378	1.15	53.0	91.7	23.504	200/400	30
		1800	324TS	**040180P3EFP324TS**	**$2,652**	W1B	483	1.15	49.4	93.0	24.685	230/460	30
		1800	324TS	**040180P3HFP324TS**	**$2,652**	W1B	530	1.15	39.5	93.0	24.685	575	30
		1800	324TS	**040180P3VFP324TS**	**$2,652**	W1B	483	1.15	56.8	93.0	24.685	200/400	30
50	37	3600	324TS	**050360P3EFP324TS**	**$3,184**	W1B	481	1.15	58.4	92.4	24.685	230/460	30
		3600	324TS	**050360P3HFP324TS**	**$3,184**	W1B	480	1.15	46.7	92.4	24.685	575	30
		3600	324TS	**050360P3VFP324TS**	**$3,184**	W1B	482	1.15	67.2	92.4	24.685	200/400	30
		1800	326TS	**050180P3EFP326TS**	**$3,015**	W1B	507	1.15	60.2	93.0	26.181	230/460	30;31
		1800	326TS	**050180P3VFP326TS**	**$3,015**	W1B	507	1.15	69.2	93.0	26.181	200/400	30;31
60	45	3600	326TS	**060360P3EFP326TS**	**$4,008**	W1B	528	1.15	70.6	93.0	26.181	230/460	30;31
		3600	326TS	**060360P3HFP326TS**	**$4,008**	W1B	526	1.15	56.5	93.0	26.181	575	30
		3600	326TS	**060360P3VFP326TS**	**$4,008**	W1B	527	1.15	81.2	93.0	26.181	200/400	30;31
		1800	364/5TS	**060180P3EFP364TS**	**$3,703**	W1B	815	1.15	70.2	93.6	27.638	230/460	30
		1800	364/5TS	**060180P3HFP364TS**	**$3,703**	W1B	820	1.15	56.2	93.6	27.638	575	30
		1800	364/5TS	**060180P3VFP364TS**	**$3,703**	W1B	815	1.15	80.7	93.6	27.638	200/400	30
75	55	3600	364/5TS	**075360P3EFP364TS**	**$5,074**	W1B	847	1.15	84.3	93.0	27.638	230/460	30
		3600	364/5TS	**075360P3HFP364TS**	**$5,074**	W1B	853	1.15	67.4	93.0	27.638	575	30
		3600	364/5TS	**075360P3VFP364TS**	**$5,074**	W1B	846	1.15	97.0	93.0	27.638	200/400	30
		1800	364/5TS	**075180P3EFP365TS**	**$4,715**	W1B	889	1.15	85.3	94.1	27.638	230/460	30
		1800	364/5TS	**075180P3HFP365TS**	**$4,715**	W1B	894	1.15	68.2	94.1	27.638	575	30
		1800	364/5TS	**075180P3VFP365TS**	**$4,715**	W1B	889	1.15	98.1	94.1	27.638	200/400	30

continued on next page

Please refer to back cover for description of "NOTES"

For detailed specifications, data sheets, drawings and performance curves visit http://www.weg.net

Data subject to change without notice.

ODP - Three Phase - *continued*

HP	kW	RPM	Frame	Catalog Number	List Price	Mult. Symbol	Approx. Shipping Weight (lbs)	Service Factor	FL Amps @ High	FL. Eff (%)	"C" Dimension (in)	Voltage (V)	Notes
100	75	3600	364/5TS	**100360P3EFP365TS**	**$6,152**	W1B	893	1.15	115	93.0	27.638	230/460	30;31
		3600	364/5TS	**100360P3HFP365TS**	**$6,152**	W1B	896	1.15	92.0	93.0	27.638	575	30
		3600	364/5TS	**100360P3VFP365TS**	**$6,152**	W1B	894	1.15	132	93.0	27.638	200/400	30;31
		1800	404/5TS	**100180P3EFP404TS**	**$6,065**	W1B	989	1.15	118	94.1	31.141	230/460	30;31
		1800	404/5TS	**100180P3HFP404TS**	**$6,065**	W1B	993	1.15	94.4	94.1	31.141	575	30
		1800	404/5TS	**100180P3VFP404TS**	**$6,065**	W1B	987	1.15	136	94.1	31.141	200/400	30;31
		1800	404/5T	**100180P3EFP404T**	**$6,065**	W1B	1020	1.15	118	94.1	34.133	230/460	30;31
125	90	3600	404/5TS	**125360P3EFP404TS**	**$7,762**	W1B	992	1.15	137	93.6	31.141	230/460	30;31
		3600	404/5TS	**125360P3GFP404TS**	**$7,762**	W1B	987	1.15	137	93.6	31.141	460	30;31
		3600	404/5TS	**125360P3HFP404TS**	**$7,762**	W1B	994	1.15	110	93.6	31.141	575	30
		1800	404/5TS	**125180P3EFP405TS**	**$6,651**	W1B	1040	1.15	146	94.5	31.141	230/460	30;31
		1800	404/5TS	**125180P3GFP405TS**	**$6,651**	W1B	1034	1.15	146	94.5	31.141	460	30;31
		1800	404/5TS	**125180P3HFP405TS**	**$6,651**	W1B	1042	1.15	117	94.5	31.141	575	30
150	110	3600	404/5TS	**150360P3EFP405TS**	**$10,042**	W1B	1127	1.15	168	93.6	31.141	230/460	30;31
		3600	404/5TS	**150360P3GFP405TS**	**$10,042**	W1B	1123	1.15	168	93.6	31.141	460	30;31
		3600	404/5TS	**150360P3HFP405TS**	**$10,042**	W1B	1127	1.15	134	93.6	31.141	575	30
		1800	444/5TS	**150180P3EFP444TS**	**$8,891**	W1B	1299	1.15	171	95.0	36.062	230/460	30
		1800	444/5TS	**150180P3GFP444TS**	**$8,891**	W1B	1340	1.15	171	95.0	36.062	460	30
		1800	444/5TS	**150180P3HFP444TS**	**$8,891**	W1B	1336	1.15	137	95.0	36.062	575	30
200	150	3600	444/5TS	**200360P3GFP444TS**	**$12,782**	W1B	1526	1.15	229	94.5	36.062	460	30
		3600	444/5TS	**200360P3HFP444TS**	**$12,782**	W1B	1519	1.15	183	94.5	36.062	575	30
		1800	444/5TS	**200180P3GFP445TS**	**$10,837**	W1B	1501	1.15	230	95.0	36.062	460	30;31
		1800	444/5TS	**200180P3HFP445TS**	**$10,837**	W1B	1439	1.15	184	95.0	36.062	575	30
250	185	3600	444/5TS	**250360P3GFP445TS**	**$15,654**	W1B	1609	1.15	273	94.5	36.062	460	30
		3600	444/5TS	**250360P3HFP445TS**	**$15,654**	W1B	1599	1.15	218	94.5	36.062	575	30
		1800	444/5TS	**250180P3GFP445TS**	**$13,358**	W1B	1651	1.15	273	95.4	36.062	460	30
		1800	444/5TS	**250180P3HFP445TS**	**$13,358**	W1B	1584	1.15	218	95.4	36.062	575	30
300	220	3600	444/5TS	**300360P3GFP445TS**	**$19,556**	W1B	1701	1.15	323	95.0	36.062	460	30
		3600	444/5TS	**300360P3HFP445TS**	**$19,556**	W1B	1690	1.15	258	95.0	36.062	575	30
		1800	447/9TS	**300180P3GFP447/9TSW4**	**$19,168**	W1B	2051	1.15	336	95.5	42.959	460	30;31
350	260	3600	447/9TS	**350360P3GFP447/9TSW4**	**$22,346**	W1B	2067	1.15	386	95.0	42.959	460	30
		3600	447/9TS	**350360P3HFP447/9TSW4**	**$22,346**	W1B	2067	1.15	309	95.0	42.959	575	30
		1800	447/9TS	**350180P3GFP447/9TSW4**	**$22,807**	W1B	2220	1.15	393	95.5	42.959	460	30;31
		1800	447/9TS	**350180P3HFP447/9TSW4**	**$22,807**	W1B	2220	1.15	314	95.5	42.959	575	30;31
400	300	3600	447/9TS	**400360P3GFP447/9TSW4**	**$24,140**	W1B	2176	1.15	443	95.4	42.959	460	30
		3600	447/9TS	**400360P3HFP447/9TSW4**	**$24,140**	W1B	2152	1.15	354	95.4	42.959	575	30
		1800	447/9TS	**400180P3GFP447/9TSW4**	**$25,570**	W1B	2700	1.15	443	95.5	42.959	460	30;31
		1800	447/9TS	**400180P3HFP447/9TSW4**	**$25,570**	W1B	2700	1.15	354	95.5	42.959	575	30;31
450	330	3600	447/9TS	**450360P3GFP447/9TSW4**	**$26,055**	W1B	2261	1.15	480	95.8	42.959	460	30;31
		3600	447/9TS	**450360P3HFP447/9TSW4**	**$26,055**	W1B	2261	1.15	384	95.8	42.959	575	30;31
500	370	3600	447/9TS	**500360P3GFP447/9TSW4**	**$27,711**	W1B	2341	1.15	539	95.8	42.959	460	30;31
		3600	447/9TS	**500360P3HFP447/9TSW4**	**$27,711**	W1B	2341	1.15	431	95.8	42.959	575	30;31

Please refer to back cover for description of "NOTES"

For detailed specifications, data sheets, drawings and performance curves visit http://www.weg.net

Pump Motors

FIRE PUMP MOTORS

ODP - Three Phase - C-Face

HP	kW	RPM	Frame	Catalog Number	List Price	Mult. Symbol	Approx. Shipping Weight (lbs)	Service Factor	FL Amps @ High	FL. Eff (%)	"C" Dimension (in)	Voltage (V)	Notes
7.5	5.5	3600	182/4TC	**007360P3EFP184TC-S**	**$734**	W1S	70	1.15	8.90	87.5	14.764	230/460	9;30
		3600	182/4TC	**007360P3VFP184TC-S**	**$734**	W1S	70	1.15	10.2	87.5	14.764	200/400	9;30
		3600	182/4TC	**007360P3HFP184TC-S**	**$734**	W1S	70	1.15	7.10	87.5	14.764	575	9;30
10	7.5	3600	213/5TC	**010360P3EFP213TC-S**	**$901**	W1S	121	1.15	12.2	88.5	16.575	230/460	9;30;31
		3600	213/5TC	**010360P3HFP213TC-S**	**$901**	W1S	121	1.15	9.80	88.5	16.575	575	9;30
15	11	3600	213/5TC	**015360P3EFP215TC-S**	**$1,283**	W1S	135	1.15	17.5	89.5	16.969	230/460	9;30;31
		3600	213/5TC	**015360P3VFP215TC-S**	**$1,283**	W1S	135	1.15	20.1	89.5	16.969	200/400	9;30;31
20	15	3600	254TC	**020360P3EFP254TC**	**$1,469**	W1B	228	1.15	24.3	90.2	20.669	230/460	30;31
		3600	254TC	**020360P3HFP254TC**	**$1,469**	W1B	227	1.15	19.4	90.2	20.669	575	30
		3600	254TC	**020360P3VFP254TC**	**$1,469**	W1B	228	1.15	28.0	90.2	20.669	200/400	30;31
		3600	254/6TC	**020360P3EFP254TC-S**	**$1,469**	W1S	202	1.15	23.7	90.2	20.472	230/460	9;30;31
		3600	254/6TC	**020360P3HFP254TC-S**	**$1,469**	W1S	202	1.15	19.0	90.2	20.472	575	9;30
		3600	254/6TC	**020360P3VFP254TC-S**	**$1,469**	W1S	202	1.15	27.3	90.2	20.472	200/400	9;30;31
25	18.5	3600	254/6TC	**025360P3EFP256TC-S**	**$1,783**	W1S	207	1.15	29.0	91.0	20.472	230/460	9;30
		3600	254/6TC	**025360P3VFP256TC-S**	**$1,783**	W1S	207	1.15	33.3	91.0	20.472	200/400	9;30;31
		3600	256TC	**025360P3EFP256TC**	**$1,783**	W1B	252	1.15	29.3	91.0	22.401	230/460	30
		3600	256TC	**025360P3VFP256TC**	**$1,783**	W1B	252	1.15	33.7	91.0	22.401	200/400	30
30	22	3600	284TSC	**030360P3EFP284TSC**	**$2,033**	W1B	345	1.15	34.5	91.0	22.000	230/460	30
		3600	284TSC	**030360P3VFP284TSC**	**$2,033**	W1B	345	1.15	39.7	91.0	22.000	200/400	30
40	30	3600	286TSC	**040360P3EFP286TSC**	**$2,757**	W1B	384	1.15	46.1	91.7	23.504	230/460	30
		3600	286TSC	**040360P3HFP286TSC**	**$2,757**	W1B	383	1.15	36.9	91.7	23.504	575	30
		3600	286TSC	**040360P3VFP286TSC**	**$2,757**	W1B	384	1.15	53.0	91.7	23.504	200/400	30
		1800	324TC	**040180P3EFP324TC**	**$2,752**	W1B	496	1.15	49.4	93.0	26.181	230/460	30
50	37	3600	324TSC	**050360P3EFP324TSC**	**$3,184**	W1B	492	1.15	58.4	92.4	24.685	230/460	30
		3600	324TSC	**050360P3VFP324TSC**	**$3,184**	W1B	492	1.15	67.2	92.4	24.685	200/400	30
		1800	326TC	**050180P3EFP326TC**	**$3,135**	W1B	520	1.15	60.2	93.0	27.667	230/460	30;31
60	45	3600	326TSC	**060360P3EFP326TSC**	**$4,448**	W1B	539	1.15	70.6	93.0	26.181	230/460	30
75	55	1800	364/5TC	**075180P3EFP365TC**	**$5,109**	W1B	910	1.15	85.3	94.1	29.764	230/460	30;31
100	75	1800	404/5TC	**100180P3EFP404TC**	**$6,510**	W1B	1030	1.15	118	94.1	34.133	230/460	30;31
		1800	404/5TC	**100180P3HFP404TC**	**$6,510**	W1B	1035	1.15	94.4	94.1	34.133	575	30
		1800	404/5TC	**100180P3VFP404TC**	**$6,510**	W1B	1029	1.15	136	94.1	34.133	200/400	30
125	90	1800	404/5TC	**125180P3GFP405TC**	**$6,651**	W1B	1076	1.15	146	94.5	34.133	460	30;31
		1800	404/5TC	**125180P3HFP405TC**	**$6,651**	W1B	1074	1.15	117	94.5	34.133	575	30

Please refer to back cover for description of "NOTES"

For detailed specifications, data sheets, drawings and performance curves visit http://www.weg.net

Data subject to change without notice.

ODP – Three-Phase – JM – Footless Vertical

HP	kW	RPM	Frame	Catalog Number	List Price	Mult. Symbol	Approx. Shipping Weight (lbs)	Service Factor	FL Amps @ High	FL. Eff (%)	"C" Dimension (in)	Voltage (V)	Notes
7.5	5.5	3600	182/4JM	**007360P3EFP184JMV-S**	**$993**	P1S	83	1.15	8.90	87.5	17.600	230/460	9;15;30
		3600	182/4JM	**007360P3HFP184JMV-S**	**$993**	P1S	83	1.15	7.10	87.5	17.600	575	9;15;30
		3600	182/4JM	**007360P3VFP184JMV-S**	**$993**	P1S	83	1.15	10.2	87.5	17.600	200/400	9;15;30
10	7.5	3600	213/5JM	**010360P3EFP213JMV-S**	**$1,201**	P1S	117	1.15	12.2	88.5	18.977	230/460	9;15;30
		3600	213/5JM	**010360P3HFP213JMV-S**	**$1,201**	P1S	117	1.15	9.80	88.5	18.977	575	9;15;30
		3600	213/5JM	**010360P3VFP213JMV-S**	**$1,201**	P1S	117	1.15	14.0	88.5	18.977	200/400	9;15;30
15	11	3600	213/5JM	**015360P3EFP215JMV-S**	**$1,617**	P1S	132	1.15	17.5	89.5	19.370	230/460	9;15;30
		3600	213/5JM	**015360P3HFP215JMV-S**	**$1,617**	P1S	132	1.15	14.0	89.5	19.370	575	9;15;30
		3600	213/5JM	**015360P3VFP215JMV-S**	**$1,617**	P1S	132	1.15	20.1	89.5	19.370	200/400	9;15;30
20	15	3600	254/6JM	**020360P3EFP254JMV-S**	**$2,092**	P1S	206	1.15	23.7	90.2	23.359	230/460	9;15;30
		3600	254/6JM	**020360P3HFP254JMV-S**	**$2,092**	P1S	206	1.15	19.0	90.2	23.359	575	9;15;30
		3600	254/6JM	**020360P3VFP254JMV-S**	**$2,092**	P1S	206	1.15	27.3	90.2	23.359	200/400	9;15;30
25	18.5	3600	254/6JM	**025360P3EFP256JMV-S**	**$2,352**	P1S	211	1.15	29.0	91.0	23.359	230/460	9;15;30
		3600	254/6JM	**025360P3HFP256JMV-S**	**$2,352**	P1S	211	1.15	23.2	91.0	23.359	575	9;15;30
		3600	254/6JM	**025360P3VFP256JMV-S**	**$2,352**	P1S	211	1.15	33.3	91.0	23.359	200/400	9;15;30
		3600	284JM	**030360P3EFP284JMV**	**$2,954**	P1C	351	1.15	34.5	91.0	26.584	230/460	15;30
30	22	3600	284JM	**030360P3HFP284JMV**	**$3,181**	P1C	368	1.15	27.6	91.0	26.584	575	15;30
		3600	284JM	**030360P3VFP284JMV**	**$2,954**	P1C	348	1.15	39.7	91.0	26.584	200/400	15;30
		1800	286JM	**030180P3EFP286JMV**	**$3,175**	P1C	391	1.15	35.6	92.4	28.077	230/460	15;30
		1800	286JM	**030180P3HFP286JMV**	**$3,403**	P1C	389	1.15	28.5	92.4	28.077	575	15;30
40	30	3600	286JM	**040360P3EFP286JMV**	**$3,611**	P1C	384	1.15	46.1	91.7	28.077	230/460	15;30
		3600	286JM	**040360P3HFP286JMV**	**$3,611**	P1C	412	1.15	36.9	91.7	28.077	575	15;30
		3600	286JM	**040360P3VFP286JMV**	**$3,611**	P1C	414	1.15	53.0	91.7	28.077	200/400	15;30
		1800	324JM	**040180P3EFP324JMV**	**$3,621**	P1C	547	1.15	49.4	93.0	29.147	230/460	15;30
		1800	324JM	**040180P3HFP324JMV**	**$3,621**	P1C	545	1.15	39.5	93.0	29.147	575	15;30
50	37	3600	324JM	**050360P3EFP324JMV**	**$4,394**	P1C	501	1.15	58.4	92.4	29.147	230/460	15;30
		3600	324JM	**050360P3HFP324JMV**	**$4,394**	P1C	500	1.15	46.7	92.4	29.147	575	15;30
		3600	324JM	**050360P3VFP324JMV**	**$4,664**	P1C	502	1.15	67.2	92.4	29.147	200/400	15;30
		1800	326JM	**050180P3EFP326JMV**	**$4,393**	P1C	530	1.15	60.2	93.0	30.643	230/460	15;30
		1800	326JM	**050180P3HFP326JMV**	**$4,527**	P1C	537	1.15	48.2	93.0	30.643	575	15;30
60	45	3600	326JM	**060360P3EFP326JMV**	**$5,171**	P1C	550	1.15	70.6	93.0	30.643	230/460	15;30
		3600	326JM	**060360P3HFP326JMV**	**$5,305**	P1C	555	1.15	56.5	93.0	30.643	575	15;30
		3600	326JM	**060360P3VFP326JMV**	**$5,171**	P1C	550	1.15	81.2	93.0	30.643	200/400	15;30

Please refer to back cover for description of "NOTES"

For detailed specifications, data sheets, drawings and performance curves visit http://www.weg.net

FIRE PUMP MOTORS

ODP – Three-Phase – JP – Footless Vertical

HP	kW	RPM	Frame	Catalog Number	List Price	Mult. Symbol	Approx. Shipping Weight (lbs)	Service Factor	FL Amps @ High	FL. Eff (%)	"C" Dimension (in)	Voltage (V)	Notes
7.5	5.5	3600	182/4JP	**007360P3EFP184JPV-S**	**$993**	P1S	83	1.15	8.90	87.5	20.671	230/460	9;15;30
		3600	182/4JP	**007360P3HFP184JPV-S**	**$993**	P1S	83	1.15	7.10	87.5	20.671	575	9;15;30
		3600	182/4JP	**007360P3VFP184JPV-S**	**$993**	P1S	83	1.15	10.2	87.5	20.671	200/400	9;15;30
		1800	213/5JP	**007180P3EFP213JPV-S**	**$1,028**	P1S	127	1.15	9.30	88.5	22.835	230/460	9;15;30
		1800	213/5JP	**007180P3HFP213JPV-S**	**$1,028**	P1S	127	1.15	7.40	88.5	22.835	575	9;15;30
10	7.5	3600	213/5JP	**010360P3EFP213JPV-S**	**$1,273**	P1S	130	1.15	12.2	88.5	22.835	230/460	9;15;30
		3600	213/5JP	**010360P3HFP213JPV-S**	**$1,273**	P1S	130	1.15	9.80	88.5	22.835	575	9;15;30
		3600	213/5JP	**010360P3VFP213JPV-S**	**$1,273**	P1S	130	1.15	14.0	88.5	22.835	200/400	9;15;30
		1800	213/5JP	**010180P3EFP215JPV-S**	**$1,245**	P1S	142	1.15	12.4	89.5	22.835	230/460	9;15;30
15	11	3600	213/5JP	**015360P3EFP215JPV-S**	**$1,617**	P1S	144	1.15	17.5	89.5	23.229	230/460	9;15;30
		3600	213/5JP	**015360P3HFP215JPV-S**	**$1,617**	P1S	144	1.15	14.0	89.5	23.229	575	9;15;30
		3600	213/5JP	**015360P3VFP215JPV-S**	**$1,617**	P1S	144	1.15	20.1	89.5	23.229	200/400	9;15;30
		1800	254/6JP	**015180P3EFP254JPV-S**	**$1,847**	P1S	203	1.15	18.5	91.0	26.233	230/460	9;15;30
		1800	254/6JP	**015180P3VFP254JPV-S**	**$1,847**	P1S	203	1.15	21.3	91.0	26.233	200/400	9;15;30
20	15	3600	254/6JP	**020360P3EFP254JPV-S**	**$2,092**	P1S	209	1.15	23.7	90.2	26.233	230/460	9;15;30
		3600	254/6JP	**020360P3HFP254JPV-S**	**$2,092**	P1S	209	1.15	19.0	90.2	26.233	575	9;15;30
		3600	254/6JP	**020360P3VFP254JPV-S**	**$2,092**	P1S	209	1.15	27.3	90.2	26.233	200/400	9;15;30
		1800	254/6JP	**020180P3EFP256JPV-S**	**$2,205**	P1S	219	1.15	25.5	91.0	26.233	230/460	9;15;30
25	18.5	3600	254/6JP	**025360P3EFP256JPV-S**	**$2,518**	P1S	214	1.15	29.0	91.0	26.233	230/460	9;15;30
		3600	254/6JP	**025360P3HFP256JPV-S**	**$2,518**	P1S	214	1.15	23.2	91.0	26.233	575	9;15;30
		3600	254/6JP	**025360P3VFP256JPV-S**	**$2,518**	P1S	214	1.15	33.3	91.0	26.233	200/400	9;15;30
		1800	284JP	**025180P3EFP284JPV**	**$2,768**	P1C	373	1.15	30.1	91.7	29.464	230/460	15;30
30	22	3600	284JP	**030360P3EFP284JPV**	**$3,082**	P1C	372	1.15	34.5	91.0	29.464	230/460	15;30
		3600	284JP	**030360P3HFP284JPV**	**$3,181**	P1C	371	1.15	27.6	91.0	29.464	575	15;30
		3600	284JP	**030360P3VFP284JPV**	**$3,082**	P1C	372	1.15	39.7	91.0	29.464	200/400	15;30
		1800	286JP	**030180P3EFP286JPV**	**$3,224**	P1C	410	1.15	35.6	92.4	30.957	230/460	15;30
		1800	286JP	**030180P3VFP286JPV**	**$3,174**	P1C	410	1.15	40.9	92.4	30.957	200/400	15;30
40	30	3600	286JP	**040360P3EFP286JPV**	**$3,611**	P1C	416	1.15	46.1	91.7	30.957	230/460	15;30
		3600	286JP	**040360P3HFP286JPV**	**$3,499**	P1C	414	1.15	36.9	91.7	30.957	575	15;30
		3600	286JP	**040360P3VFP286JPV**	**$3,611**	P1C	416	1.15	53.0	91.7	30.957	200/400	15;30
		1800	324JP	**040180P3EFP324JPV**	**$3,987**	P1C	509	1.15	49.4	93.0	32.027	230/460	15;30
		1800	324JP	**040180P3HFP324JPV**	**$3,621**	P1C	503	1.15	39.5	93.0	32.027	575	15;30
		1800	324JP	**040180P3VFP324JPV**	**$3,987**	P1C	509	1.15	56.8	93.0	32.027	200/400	15;30
50	37	3600	324JP	**050360P3EFP324JPV**	**$4,372**	P1C	503	1.15	58.4	92.4	32.027	230/460	15;30
		3600	324JP	**050360P3HFP324JPV**	**$4,372**	P1C	506	1.15	46.7	92.4	32.027	575	15;30
		3600	324JP	**050360P3VFP324JPV**	**$4,372**	P1C	504	1.15	67.2	92.4	32.027	200/400	15;30
		1800	326JP	**050180P3EFP326JPV**	**$4,500**	P1C	546	1.15	60.2	93.0	33.523	230/460	15;30
		1800	326JP	**050180P3HFP326JPV**	**$4,394**	P1C	533	1.15	48.2	93.0	33.523	575	15;30
		1800	326JP	**050180P3VFP326JPV**	**$4,500**	P1C	546	1.15	69.2	93.0	33.523	200/400	15;30
60	45	3600	326JP	**060360P3EFP326JPV**	**$5,105**	P1C	564	1.15	70.6	93.0	33.523	230/460	15;30
		3600	326JP	**060360P3HFP326JPV**	**$7,233**	P1C	558	1.15	56.5	93.0	33.523	575	15;30
		3600	326JP	**060360P3VFP326JPV**	**$5,105**	P1C	563	1.15	81.2	93.0	33.523	200/400	15;30
		1800	364/5JP	**060180P3EFP364JPV**	**$6,142**	P1C	810	1.15	70.2	93.6	35.208	230/460	15;30
		1800	364/5JP	**060180P3VFP364JPV**	**$6,142**	P1C	810	1.15	80.7	93.6	35.208	200/400	15;30

continued on next page

Please refer to back cover for description of "NOTES"

For detailed specifications, data sheets, drawings and performance curves visit http://www.weg.net

Data subject to change without notice.

ODP – Three-Phase – JP – Footless Vertical - *continued*

HP	kW	RPM	Frame	Catalog Number	List Price	Mult. Symbol	Approx. Shipping Weight (lbs)	Service Factor	FL Amps @ High	FL. Eff (%)	"C" Dimension (in)	Voltage (V)	Notes
75	55	3600	364/5JP	**075360P3EFP364JPV**	**$7,525**	P1C	880	1.15	84.3	93.0	35.208	230/460	15;30
		3600	364/5JP	**075360P3HFP364JPV**	**$7,525**	P1C	886	1.15	67.4	93.0	35.208	575	15;30
		3600	364/5JP	**075360P3VFP364JPV**	**$7,525**	P1C	880	1.15	96.9	93.0	35.208	200/400	15;30
		1800	364/5JP	**075180P3EFP365JPV**	**$6,967**	P1C	922	1.15	85.3	94.1	35.208	230/460	15;30
		1800	364/5JP	**075180P3VFP365JPV**	**$6,967**	P1C	886	1.15	98.1	94.1	35.208	200/400	15;30
100	75	3600	364/5JP	**100360P3EFP365JPV**	**$8,860**	P1C	926	1.15	115	93.0	35.208	230/460	15;30
		3600	364/5JP	**100360P3HFP365JPV**	**$8,860**	P1C	890	1.15	92.0	93.0	35.208	575	15;30
		3600	364/5JP	**100360P3VFP365JPV**	**$8,860**	P1C	927	1.15	132	93.0	35.208	200/400	15;30
		1800	404/5JP	**100180P3EFP404JPV**	**$8,825**	P1C	992	1.15	118	94.1	38.452	230/460	15;30
		1800	404/5JP	**100180P3VFP404JPV**	**$8,825**	P1C	991	1.15	136	94.1	38.452	200/400	15;30

Pump Motors

FIRE PUMP MOTORS

TEFC (50Hz) – Three-Phase – IE2

HP	kW	RPM	Frame	Catalog Number	List Price	Mult. Symbol	Approx. Shipping Weight (lbs)	Service Factor	FL Amps @ High	FL. Eff (%)	"C" Dimension (in)	Voltage (V)	Notes
15	11	3000	254/6T	**01530EP3OFP254T-W22**	**$1,788**	W1	266	1.15	19.3	90.2	24.945	380-415	30;32
		1500	254/6T	**01515EP3OFP254T-W22**	**$1,811**	W1	298	1.15	20.1	91.0	24.945	380-415	30;32
20	15	3000	254/6T	**02030EP3OFP256T-W22**	**$2,334**	W1	306	1.15	26.3	90.2	24.945	380-415	30;32
		1500	254/6T	**02015EP3OFP256T-W22**	**$2,157**	W1	347	1.15	27.7	90.9	24.945	380-415	30;32
25	18.5	3000	284/6TS	**02530EP3OFP284TS-W22**	**$2,938**	W1	368	1.15	31.3	92.4	26.557	380-415	30
		1500	284/6TS	**02515EP3OFP284TS-W22**	**$2,688**	W1	395	1.15	33.1	92.4	26.557	380-415	30;32
30	22	3000	284/6TS	**03030EP3OFP286TS-W22**	**$3,490**	W1	428	1.15	37.6	91.5	26.557	380-415	30
		1500	284/6TS	**03015EP3OFP286TS-W22**	**$3,159**	W1	447	1.15	40.0	92.1	26.557	380-415	30;32
40	30	3000	324/6TS	**04030EP3OFP324TS-W22**	**$4,489**	W1	568	1.15	50.3	92.5	29.616	380-415	30;32
		1500	324/6TS	**04015EP3OFP324TS-W22**	**$3,969**	W1	532	1.15	54.2	92.5	29.616	380-415	30;32
50	37	3000	324/6TS	**05030EP3OFP326TS-W22**	**$5,050**	W1	592	1.15	63.0	92.8	29.616	380-415	30
		1500	324/6TS	**05015EP3OFP326TS-W22**	**$4,845**	W1	567	1.15	66.2	93.0	29.616	380-415	30
60	45	3000	364/5TS	**06030EP3OFP364TS-W22**	**$7,174**	W1	927	1.15	74.2	93.0	32.276	380-415	30
		1500	364/5TS	**06015EP3OFP364TS-W22**	**$7,020**	W1	1029	1.15	77.6	93.8	32.276	380-415	30
75	55	3000	364/5TS	**07530EP3OFP365TS-W22**	**$8,636**	W1	983	1.15	92.0	93.5	32.276	380-415	30
		1500	364/5TS	**07515EP3OFP365TS-W22**	**$8,270**	W1	1050	1.15	95.3	94.5	32.276	380-415	30
100	75	3000	404/5TS	**10030EP3OFP405TS-W22**	**$11,402**	W1	1192	1.15	125	94.0	36.732	380-415	30
		1500	404/5TS	**10015EP3OFP405TS-W22**	**$11,105**	W1	1266	1.15	124	94.5	36.732	380-415	30
125	90	3000	444/5TS	**12530EP3OFP444TS-W22**	**$14,583**	W1	1664	1.15	156	94.5	41.200	380-415	30;32
		1500	444/5TS	**12515EP3OFP444TS-W22**	**$14,011**	W1	1686	1.15	158	94.6	41.200	380-415	30;32
150	110	3000	444/5TS	**15030EP3OFP445TS-W22**	**$17,938**	W1	1801	1.15	185	95.0	41.200	380-415	30;32
		1500	444/5TS	**15015EP3OFP445TS-W22**	**$16,549**	W1	1874	1.15	190	94.6	41.200	380-415	30
200	150	3000	445/7TS	**20030EP3OFP447TS-W22**	**$22,384**	W1	2242	1.15	236	95.2	44.951	380-415	30
		1500	445/7TS	**20015EP3OFP447TS-W22**	**$20,043**	W1	2107	1.15	264	95.3	44.951	380-415	30
250	185	3000	447/9TS	**25030EP3OFP449TS-W22**	**$31,514**	W1	2739	1.15	293	95.6	52.588	380-415	30
		1500	447/9TS	**25015EP3OFP449TS-W22**	**$25,463**	W1	2883	1.15	313	95.5	52.588	380-415	30

Please refer to back cover for description of "NOTES"

For detailed specifications, data sheets, drawings and performance curves visit http://www.weg.net

Data subject to change without notice.

Pump Motors

P-BASE MOTORS

TEFC - Three Phase - NEMA Premium®

HP and HPH types available. Suitable for dusty and moist environments providing high starting torque.

Standard Features:

- 50/60 Hz capable
- Class F insulation (Impregnation Resin and magnet Wire are class H)
- Stainless Steel Nameplate - Laser etched with high contrast background
- Regreasable ball bearings (Frames 254HP and up)
- Gasketed conduit box
- Class I, Div. 2, Groups A, B, C & D – T3, Class II, Div 2, Groups F & G – T3C

Inverter Rated:
1000:1 for variable torque

ADDITIONAL TECHNICAL DATA

CONTACT WEG OR VISIT WWW.WEG.NET

Features that make a difference:

- 1.25 Service Factor up to 100 HP
- NPT Threaded terminal box
- HP and HPH types available
- NPT Threaded terminal box

P-BASE MOTORS

TEFC – Three-Phase – NEMA Premium®

HP	kW	RPM	Frame	Catalog Number	List Price	Mult. Symbol	Approx. Shipping Weight (lbs)	Service Factor	FL Amps @ High	FL. Eff (%)	"C" Dimension (in)	Voltage (V)	Notes
1	0.75	1800	143HP	00118ET3E143HP-W22	$619	P1F	54	1.25	1.43	85.5	14.199	230/460	15
1.5	1.1	3600	L143HP	00156ET3E143HP-W22	$573	P1F	40	1.25	1.98	84.0	16.255	230/460	15
		1800	145HP	00158ET3E145HP-W22	$663	P1F	62	1.25	2.00	86.5	15.175	230/460	15;39
2	1.5	3600	145HP	00236ET3E145HP-W22	$581	P1F	51	1.25	2.65	85.5	15.175	230/460	15
		1800	145HP	00218ET3E145HP-W22	$730	P1F	63	1.25	2.72	86.5	15.175	230/460	15
3	2.2	3600	145HP	00336ET3E145HP-W22	$863	P1F	74	1.25	3.71	86.5	15.175	230/460	15
		3600	182HP	00336ET3E182HP-W22	$925	P1F	88	1.25	3.68	87.5	16.841	230/460	15
		1800	182HP	00318ET3E182HP-W22	$923	P1F	108	1.25	3.90	89.5	16.841	230/460	15;39
5	3.7	3600	L184HP	00536ET3E184HP-W22	$1,084	P1F	113	1.25	5.96	89.5	20.330	230/460	15
		1800	184HP	00518ET3E184HP-W22	$1,045	P1F	117	1.25	6.40	89.5	17.841	230/460	15
7.5	5.5	3600	L184HP	00736ET3E184HP-W22	$1,331	P1F	149	1.25	8.76	89.5	20.330	230/460	15
		3600	213HP	00736ET3E213HP-W22	$1,440	P1F	139	1.25	8.57	89.5	19.850	230/460	15
		1800	213HP	00718ET3E213HP-W22	$1,371	P1F	180	1.25	9.29	91.7	19.850	230/460	15
10	7.5	3600	215HP	01036ET3E215HP-W22	$1,727	P1F	193	1.25	11.5	91.7	21.346	230/460	15
		1800	215HP	01018ET3E215HP-W22	$1,641	P1F	201	1.25	12.6	91.7	21.346	230/460	15
15	11	3600	215HP	01536ET3E215HP-W22	$2,240	P1F	227	1.25	17.0	91.0	21.346	230/460	15
		3600	254HP	01536ET3E254HP-W22	$2,462	P1F	253	1.25	17.2	91.0	25.573	230/460	15
		1800	254HP	01518ET3E254HP-W22	$2,463	P1F	364	1.25	18.0	92.4	25.573	230/460	15
20	15	3600	254HP	02036ET3E254HP-W22	$2,738	P1F	341	1.25	23.2	91.0	25.573	230/460	15
		3600	256HP	02036ET3E256HP-W22	$2,955	P1F	351	1.25	23.2	91.0	27.305	230/460	15
		1800	256HP	02018ET3E256HP-W22	$2,721	P1F	308	1.25	24.4	93.0	27.305	230/460	15
25	18.5	3600	256HP	02536ET3E256HP-W22	$3,336	P1F	417	1.00	28.1	91.7	27.305	230/460	15
		3600	284HP	02536ET3E284HP-W22	$3,627	P1F	361	1.25	28.5	91.7	28.594	230/460	15
		3600	284HPH	02536ET3E284HPH-W22	$3,627	P1F	535	1.25	28.5	91.7	30.344	230/460	15
		1800	284HP	02518ET3E284HP-W22	$3,624	P1F	450	1.25	29.5	93.6	28.594	230/460	15
		1800	284HPH	02518ET3E284HPH-W22	$3,624	P1F	484	1.25	29.5	93.6	30.344	230/460	15
30	22	3600	284HP	03036ET3E284HP-W22	$4,040	P1F	535	1.25	33.8	91.7	28.594	230/460	15
		3600	286HP	03036ET3E286HP-W22	$4,365	P1F	392	1.25	33.8	91.7	30.089	230/460	15
		3600	286HPH	03036ET3E286HPH-W22	$4,365	P1F	576	1.25	33.8	91.7	31.839	230/460	15
		1800	286HP	03018ET3E286HP-W22	$3,967	P1F	436	1.25	35.1	93.6	30.089	230/460	15
		1800	286HPH	03018ET3E286HPH-W22	$3,967	P1F	610	1.25	35.1	93.6	31.839	230/460	15
40	30	3600	286HP	04036ET3E286HP-W22	$5,160	P1F	598	1.00	45.8	92.4	30.089	230/460	15
		3600	324HP	04036ET3E324HP-W22	$5,457	P1F	546	1.25	45.8	93.6	33.037	230/460	15
		1800	324HP	04018ET3E324HP-W22	$5,247	P1F	634	1.25	47.1	94.1	33.037	230/460	15
50	37	3600	324HP	05036ET3E324HP-W22	$6,461	P1F	787	1.25	55.5	94.1	33.037	230/460	15
		3600	326HP	05036ET3E326HP-W22	$6,681	P1F	583	1.25	55.5	94.1	34.531	230/460	15
		1800	326HP	05018ET3E326HP-W22	$6,009	P1F	668	1.25	60.6	94.5	34.531	230/460	15
60	45	3600	326HP	06036ET3E326HP-W22	$8,632	P1F	658	1.15	68.6	93.6	34.531	230/460	15
		3600	364/5HP	06036ET3E364HP-W22	$9,484	P1F	823	1.25	68.2	94.1	37.940	230/460	15
		1800	364/5HP	06018ET3E364HP-W22	$8,525	P1F	1100	1.25	68.4	95.0	37.940	230/460	15
75	55	3600	364/5HP	07536ET3E365HP-W22	$10,977	P1F	845	1.25	81.6	95.0	37.940	230/460	15
		1800	364/5HP	07518ET3E365HP-W22	$9,352	P1F	1114	1.25	82.3	95.4	37.940	230/460	15

continued on next page

Please refer to back cover for description of "NOTES"

For detailed specifications, data sheets, drawings and performance curves visit http:// www.weg.net

Data subject to change without notice.

TEFC – Three-Phase – NEMA Premium® - *continued*

HP	kW	RPM	Frame	Catalog Number	List Price	Mult. Symbol	Approx. Shipping Weight (lbs)	Service Factor	FL Amps @ High	FL. Eff (%)	"C" Dimension (in)	Voltage (V)	Notes
100	75	3600	404/5HP	10036ET3E405HP-W22	$12,908	P1F	1043	1.25	110	95.0	41.340	230/460	15
		3600	404/5HPH	10036ET3E405HPH-W22	$12,908	P1F	1227	1.25	110	95.0	41.340	230/460	15
		3600	404/5HP	10036ET3G405HP-W22	$12,908	P1F	1486	1.25	110	95.0	41.340	460	15
		3600	404/5HPH	10036ET3G405HPH-W22	$12,908	P1F	1592	1.25	110	95.0	41.340	460	15
		1800	404/5HP	10018ET3E405HP-W22	$11,222	P1F	1138	1.25	112	95.4	41.340	230/460	15
		1800	404/5HPH	10018ET3E405HPH-W22	$11,222	P1F	1604	1.25	112	95.4	41.340	230/460	15
		1800	404/5HP	10018ET3G405HP-W22	$11,222	P1F	1475	1.25	112	95.4	41.340	460	15
		1800	404/5HPH	10018ET3G405HPH-W22	$11,222	P1F	1475	1.25	112	95.4	41.340	460	15
125	90	3600	444/5HP	12536ET3G444HP-W22	$17,969	P1F	2146	1.15	134	95.0	44.854	460	15
		1800	444/5HP	12518ET3G444HP-W22	$15,687	P1F	2060	1.15	142	95.4	44.854	460	15
150	110	3600	444/5HP	15036ET3G445HP-W22	$20,517	P1F	2275	1.15	161	95.4	44.854	460	15
		1800	444/5HP	15018ET3G445HP-W22	$17,845	P1F	2262	1.15	170	95.8	44.854	460	15

Please refer to back cover for description of "NOTES"

For detailed specifications, data sheets, drawings and performance curves visit http:// www.weg.net

NOTES:

TRU-METRIC™

TEFC – Foot Mount A-233
TEFC – Foot Mount - FF Flange Motors A-236

ATEX MOTORS

TEFC – Ex ec A-238
TEFC – Ex db – IE2 . . . . . A-243

IEC Tru-Metric™ Motors

GENERAL PURPOSE MOTORS

TEFC - Three-Phase

This line is designed and built according to IEC Standards 60034 and 60072.

Standard Features:

- 60 Hz (1.25 Service Factor up to 200 hp) and 50 Hz (1.0 Service Factor)
- Class F insulation (Impregnation Resin and Magnet wire are class H)
- F2 mounted as standard (F1 convertible)
- Stainless Steel Nameplate - Laser etched with high contrast background
- Regreasable ball bearings (Frames 160 and up)
- Gasketed conduit box
- Class I, Div. 2, Groups A, B, C & D – T3, Class II, Div 2, Groups F & G – T3C (Cast Iron Frames only)
- Suitable for WYE/Delta Start (W and Y voltage code motors)
- 660-690V; Sine Wave Only and with Nameplate Mod

W22 Cast Iron

Aluminum

Features that make a difference:

- 1.25 Service Factor for 60 Hz operation (IE3) up to 200 hp
- 1.00 Service Factor for 50 Hz operation (IE3)
- Optimized ventilation system for cooler operation and reduced noise levels
- Solid base for reduced vibration levels (Cast Iron Frames)
- Frames 225 and up can easily be F1 (B3L) converted by simply rotating the terminal box adapter or F3 by removing it
- Aluminum frames have removable feet for easy F1, F2 and F3 (B3L, B3R, B3T) conversion
- Terminal blocks

IEC Motors

ADDITIONAL TECHNICAL DATA

ELECTRICAL DATA: B-42 to B-47
MECHANICAL DATA: B-106 to B-109 (Cast Iron)
(Aluminum Frames) CONTACT WEG OR VISIT WWW.WEG.NET

Inverter Rated (IE3):
1000:1 for variable torque
12:1 for constant torque

** 460V and below only*

Please refer to back cover for description of "NOTES"

For detailed specifications, data sheets, drawings and performance curves visit http:// www.weg.net

Data subject to change without notice.

TEFC – Foot Mount

HP	kW	RPM	Frame	Catalog Number	List Price	Mult. Symbol	Approx. Shipping Weight (lbs)	Service Factor	FL Amps @ High	FL. Eff (%)	"C" Dimension (in)	Voltage (V)	Notes
0.25	0.18	3600//3000	63	.1836EP3EAL63-W22	$280	T1	14	1.15	0.48	68.0	8.504	230/460//190/380	2;7
		1800//1500	63	.1818EP3EAL63-W22	$267	T1	16	1.15	0.51	69.0	8.504	230/460//190/380	2;7
		1200//1000	71	.1812EP3EAL71-W22	$338	T1	22	1.15	0.77	61.0	9.764	230/460//190/380	2;7
		900//750	80	.1809EP3EAL80-W22	$540	T1	30	1.25	0.80	50.5	10.866	230/460//190/380	2;7
		900//750	80	.1809EP3WAL80-W22	$540	T1	28	1.15	0.80	50.5	10.866	460//220-240/380-415	2;7
0.33	0.25	3600//3000	63	.2536EP3EAL63-W22	$286	T1	16	1.15	0.62	70.0	8.504	230/460//190/380	2;7
		1800//1500	71	.2518EP3EAL71-W22	$282	T1	24	1.15	0.68	73.0	9.764	230/460//190/380	2;7
		1200//1000	71	.2512EP3EAL71-W22	$363	T1	24	1.15	1.00	64.0	9.764	230/460//190/380	2;7
		900//750	80	.2509EP3EAL80-W22	$583	T1	29	1.15	0.87	57.5	10.866	230/460//190/380	2;7
		900//750	80	.2509EP3WAL80-W22	$583	T1	32	1.15	0.87	57.5	10.866	460//220-240/380-415	2;7
0.5	0.37	3600//3000	71	.3736EP3EAL71-W22	$309	T1	22	1.15	0.83	73.0	9.764	230/460//190/380	2;7
		1800//1500	71	.3718EP3EAL71-W22	$290	T1	24	1.15	1.06	73.0	9.764	230/460//190/380	2;7
		1200//1000	80	.3712EP3EAL80-W22	$378	T1	27	1.15	1.07	64.0	10.866	230/460//190/380	2;7
		900//750	90S/L	.3709EP3EAL90S-W22	$662	T1	40	1.15	1.35	61.5	12.953	230/460//190/380	2;7
		900//750	90S/L	.3709EP3WAL90S/L-W22	$662	T1	40	1.15	1.35	61.5	12.953	460//220-240/380-415	2;7
0.75	0.55	3600//3000	71	.5536EP3EAL71-W22	$316	T1	23	1.15	1.14	76.0	9.764	230/460//190/380	2;7
		1800//1500	80	.5518EP3EAL80-W22	$333	T1	28	1.15	1.25	77.0	10.866	230/460//190/380	2;7
		1200//1000	80	.5512EP3EAL80-W22	$405	T1	32	1.15	1.63	66.0	10.866	230/460//190/380	2;7
		900//750	90S/L	.5509EP3EAL90L-W22	$696	T1	46	1.15	2.12	62.5	12.953	230/460//190/380	2;7
		900//750	90S/L	.5509EP3WAL90S/L-W22	$696	T1	58	1.15	2.12	62.5	12.953	460//220-240/380-415	2;7
1	0.75	3600//3000	80	.7536ET3WAL80-W22	$397	T1	27	1.25	1.43	81.5	10.866	460//220-240/380-415	2;7
		1800//1500	90S/L	.7518ET3EAL90S/L-W22	$420	T1	42	1.25	1.47	85.5	12.953	230/460//190/380	2;7
		1800//1500	90S/L	.7518ET3WAL90S/L-W22	$420	T1	43	1.25	1.47	85.5	12.953	460//220-240/380-415	2;7
		1200//1000	90S/L	.7512ET3EAL90S-W22	$537	T1	47	1.25	1.68	82.5	12.953	230/460//190/380	2;7
		1200//1000	90S/L	.7512ET3WAL90S-W22	$537	T1	51	1.25	1.68	82.5	12.953	460//220-240/380-415	2;7
		900//750	100L	.7509ET3EAL100L-W22	$869	T1	68	1.25	2.11	75.5	14.803	230/460//190/380	2;7
1.5	1.1	3600//3000	80	00136ET3EAL80-W22	$444	T1	29	1.25	2.03	84.0	10.866	230/460//190/380	2;7
		3600//3000	80	00136ET3WAL80-W22	$444	T1	30	1.25	2.03	84.0	10.866	460//220-240/380-415	2;7
		1800//1500	90S/L	00118ET3EAL90S-W22	$470	T1	44	1.25	2.05	86.5	12.953	230/460//190/380	2;7
		1800//1500	90S/L	00118ET3WAL90S-W22	$470	T1	44	1.25	2.05	86.5	12.953	460//220-240/380-415	2;7
		1200//1000	100L	00112ET3EAL100L-W22	$746	T1	80	1.00	2.32	87.5	14.803	230/460//190/380	2;7
2	1.5	3600//3000	90S/L	00156ET3EAL90S-W22	$504	T1	44	1.25	2.69	85.5	12.953	230/460//190/380	2;7
		3600//3000	90S/L	00156ET3WAL90S-W22	$504	T1	44	1.25	2.69	85.5	12.953	460//220-240/380-415	2;7
		1800//1500	90S/L	00158ET3EAL90L-W22	$524	T1	49	1.25	2.79	86.5	12.953	230/460//190/380	2;7
		1800//1500	90S/L	00158ET3WAL90L-W22	$524	T1	49	1.25	2.79	86.5	12.953	460//220-240/380-415	2;7
		1200//1000	112M	00152ET3EAL112M-W22	$923	T1	93	1.25	3.08	88.5	15.472	230/460//190/380	2;7
		1200//1000	112M	00152ET3WAL112M-W22	$923	T1	93	1.25	3.08	88.5	15.472	460//220-240/380-415	2;7
		900//750	112M	00159ET3YAL112M-W22	$1,001	T1	90	1.25	3.50	84.0	15.472	460//380-415/660-690	2;7
3	2.2	3600//3000	90S/L	00236ET3EAL90L-W22	$756	T1	50	1.25	3.85	86.5	12.953	230/460//190/380	2;7
		3600//3000	90S/L	00236ET3WAL90L-W22	$756	T1	49	1.25	3.85	86.5	12.953	460//220-240/380-415	2;7
		1800//1500	100L	00218ET3EAL100L-W22	$630	T1	66	1.25	4.11	89.5	14.803	230/460//190/380	2;7
		1800//1500	100L	00218ET3WAL100L-W22	$630	T1	66	1.25	4.11	89.5	14.803	460//220-240/380-415	2;7
		1200//1000	132S	00212ET3EAL132S-W22	$1,166	T1	131	1.25	4.41	89.5	19.291	230/460//190/380	2;7
		1200//1000	132S	00212ET3YAL132S-W22	$1,166	T1	136	1.25	4.41	89.5	19.291	460//380-415/660-690	2;7
		900//750	132S	00209ET3YAL132S-W22	$1,412	T1	145	1.25	4.75	85.5	19.291	460//380-415/660-690	2;7

continued on next page

Please refer to back cover for description of "NOTES"

For detailed specifications, data sheets, drawings and performance curves visit http:// www.weg.net

TEFC – Foot Mount - *continued*

HP	kW	RPM	Frame	Catalog Number	List Price	Mult. Symbol	Approx. Shipping Weight (lbs)	Service Factor	FL Amps @ High	FL. Eff (%)	"C" Dimension (in)	Voltage (V)	Notes
4	3	3600//3000	100L	00336ET3EAL100L-W22	$805	T1	65	1.25	5.01	88.5	14.803	230/460//190/380	2;7
		3600//3000	100L	00336ET3WAL100L-W22	$805	T1	65	1.25	5.01	88.5	14.803	460//220-240/380-415	2;7
		1800//1500	100L	00318ET3EAL100L-W22	$672	T1	77	1.25	5.33	89.5	14.803	230/460//190/380	2;7
		1800//1500	100L	00318ET3WAL100L-W22	$672	T1	77	1.25	5.33	89.5	14.803	460//220-240/380-415	2;7
		1200//1000	132M	00312ET3EAL132M-W22	$1,247	T1	137	1.25	6.01	89.5	19.291	230/460//190/380	2;7
		1200//1000	132M	00312ET3YAL132M-W22	$1,247	T1	147	1.25	6.01	89.5	19.291	460//380-415/660-690	2;7
		900//750	132M	00309ET3EAL132M-W22	$1,610	T1	193	1.25	6.29	85.5	19.291	230/460//190/380	2;7
		900//750	132M	00309ET3YAL132M-W22	$1,610	T1	156	1.25	6.29	85.5	19.291	460//380-415/660-690	2;7
5.5	4	3600//3000	112M	00436ET3EAL112M-W22	$874	T1	86	1.25	6.67	88.5	15.472	230/460//190/380	2;7
		3600//3000	112M	00436ET3YAL112M-W22	$874	T1	86	1.25	6.67	88.5	15.472	460//380-415/660-690	2;7
		1800//1500	112M	00418ET3EAL112M-W22	$679	T1	93	1.25	7.28	89.5	15.472	230/460//190/380	2;7
		1800//1500	112M	00418ET3YAL112M-W22	$679	T1	93	1.25	7.28	89.5	15.472	460//380-415/660-690	2;7
		1200//1000	132M	00412ET3EAL132M-W22	$1,254	T1	147	1.25	7.90	89.5	19.291	230/460//190/380	2;7
		1200//1000	132M	00412ET3YAL132M-W22	$1,254	T1	147	1.25	7.90	89.5	19.291	460//380-415/660-690	2;7
		900//750	160M	00409ET3Y160M-W22	$1,947	T1	299	1.25	8.17	86.5	23.543	460//380-415/660-690	7
7.5	5.5	3600//3000	132S	00536ET3EAL132S-W22	$1,144	T1	136	1.25	8.97	89.5	19.291	230/460//190/380	2;7
		3600//3000	132S	00536ET3YAL132S-W22	$1,144	T1	136	1.25	8.97	89.5	19.291	460//380-415/660-690	2;7
		1800//1500	132S	00518ET3EAL132S-W22	$932	T1	142	1.25	9.07	91.7	19.291	230/460//190/380	2;7
		1800//1500	132S	00518ET3YAL132S-W22	$932	T1	142	1.25	9.07	91.7	19.291	460//380-415/660-690	2;7
		1200//1000	160M	00512ET3Y160M-W22	$1,760	T1	291	1.25	9.48	91.0	23.543	460//380-415/660-690	7
		900//750	160M	00509ET3Y160M-W22	$2,244	T1	306	1.25	11.1	87.5	23.543	460//380-415/660-690	7
10	7.5	3600//3000	132S	00736ET3EAL132S-W22	$1,292	T1	148	1.25	12.3	90.2	19.291	230/460//190/380	2;7
		3600//3000	132S	00736ET3YAL132S-W22	$1,292	T1	147	1.25	12.3	90.2	19.291	460//380-415/660-690	2;7
		1800//1500	132M	00718ET3EAL132M-W22	$1,110	T1	159	1.25	12.2	91.7	19.291	230/460//190/380	2;7
		1800//1500	132M	00718ET3YAL132M-W22	$1,110	T1	159	1.25	12.2	91.7	19.291	460//380-415/660-690	2;7
		1200//1000	160M	00712ET3Y160M-W22	$2,306	T1	306	1.25	13.1	91.0	23.543	460//380-415/660-690	7
		900//750	160L	00709ET3Y160L-W22	$2,774	T1	352	1.25	15.2	88.5	25.276	460//380-415/660-690	7
15	11	3600//3000	160M	01136ET3Y160M-W22	$2,102	T1	304	1.25	17.9	91.7	23.543	460//380-415/660-690	7
		1800//1500	160M	01118ET3Y160M-W22	$1,726	T1	321	1.25	18.2	92.4	23.543	460//380-415/660-690	7
		1200//1000	160L	01112ET3Y160L-W22	$3,160	T1	354	1.25	18.8	91.7	25.276	460//380-415/660-690	7
		900//750	180L	01109ET3Y180L-W22	$4,031	T1	419	1.25	19.5	89.5	27.638	460//380-415/660-690	7
20	15	3600//3000	160M	01536ET3Y160M-W22	$2,413	T1	320	1.25	24.4	91.7	23.543	460//380-415/660-690	7
		1800//1500	160L	01518ET3Y160L-W22	$2,118	T1	375	1.25	25.0	93.0	25.276	460//380-415/660-690	7
		1200//1000	180L	01512ET3Y180L-W22	$3,884	T1	447	1.25	24.7	91.7	27.638	460//380-415/660-690	7
		900//750	200L	01509ET3Y200L-W22	$5,158	T1	517	1.25	28.0	91.0	30.197	460//380-415/660-690	7
25	18.5	3600//3000	160L	01836ET3Y160L-W22	$2,925	T1	353	1.25	29.9	92.4	25.276	460//380-415/660-690	7
		1800//1500	180M	01818ET3Y180M-W22	$2,689	T1	436	1.25	30.6	93.6	26.142	460//380-415/660-690	7
		1200//1000	200L	01812ET3Y200L-W22	$4,886	T1	552	1.25	30.8	93.0	30.197	460//380-415/660-690	7
		900//750	225S/M	01809ET3Y225S/M-W22	$5,902	T1	830	1.25	31.6	93.0	34.882	460//380-415/660-690	7
30	22	3600//3000	180M	02236ET3Y180M-W22	$3,492	T1	424	1.25	34.7	92.4	26.142	460//380-415/660-690	7
		1800//1500	180L	02218ET3Y180L-W22	$3,225	T1	457	1.25	36.0	93.6	27.638	460//380-415/660-690	7
		1200//1000	200L	02212ET3Y200L-W22	$4,924	T1	601	1.25	37.1	93.0	30.197	460//380-415/660-690	7
		900//750	225S/M	02209ET3Y225S/M-W22	$7,506	T1	885	1.25	37.6	93.0	34.882	460//380-415/660-690	7

continued on next page

Please refer to back cover for description of "NOTES"

For detailed specifications, data sheets, drawings and performance curves visit http:// www.weg.net

Data subject to change without notice.

TEFC – Foot Mount - *continued*

HP	kW	RPM	Frame	Catalog Number	List Price	Mult. Symbol	Approx. Shipping Weight (lbs)	Service Factor	FL Amps @ High	FL. Eff (%)	"C" Dimension (in)	Voltage (V)	Notes
40	30	3600//3000	200L	03036ET3Y200L-W22	$4,877	T1	575	1.25	47.1	93.0	30.197	460//380-415/660-690	7
		1800//1500	200L	03018ET3Y200L-W22	$4,312	T1	580	1.25	49.4	94.1	30.197	460//380-415/660-690	7
		1200//1000	225S/M	03012ET3Y225S/M-W22	$7,689	T1	1055	1.25	47.6	94.1	34.882	460//380-415/660-690	7
		900//750	250S/M	03009ET3Y250S/M-W22	$8,858	T1	1078	1.25	50.9	93.6	37.992	460//380-415/660-690	7
50	37	3600//3000	200L	03736ET3Y200L-W22	$5,487	T1	587	1.25	61.3	93.6	30.197	460//380-415/660-690	7
		1800//1500	225S/M	03718ET3Y225S/M-W22	$6,984	T1	1041	1.25	58.5	94.5	34.882	460//380-415/660-690	7
		1200//1000	250S/M	03712ET3Y250S/M-W22	$9,947	T1	1266	1.25	58.8	94.1	37.992	460//380-415/660-690	7
		900//750	280S/M	03709ET3Y280S/M-W22	$11,751	T1	1481	1.25	64.1	94.1	42.165	460//380-415/660-690	7
60	45	3600//3000	225S/M	04536ET3Y225S/M-W22	$7,961	T1	1053	1.25	66.7	94.1	33.701	460//380-415/660-690	7
		1800//1500	225S/M	04518ET3Y225S/M-W22	$7,391	T1	1022	1.25	69.9	95.0	34.882	460//380-415/660-690	7
		1200//1000	280S/M	04512ET3Y280S/M-W22	$11,023	T1	1681	1.25	74.7	94.5	42.165	460//380-415/660-690	7
		900//750	280S/M	04509ET3Y280S/M-W22	$12,815	T1	1631	1.25	77.0	94.1	42.165	460//380-415/660-690	7
75	55	3600//3000	250S/M	05536ET3Y250S/M-W22	$9,847	T1	1259	1.25	80.3	94.5	37.992	460//380-415/660-690	7
		1800//1500	250S/M	05518ET3Y250S/M-W22	$8,961	T1	1206	1.25	85.1	95.4	37.992	460//380-415/660-690	7
		1200//1000	280S/M	05512ET3Y280S/M-W22	$13,622	T1	1794	1.25	90.2	94.5	42.165	460//380-415/660-690	7
		900//750	315S/M	05509ET3Y315S/M-W22	$15,379	T1	2436	1.25	93.7	94.5	50.157	460//380-415/660-690	7
100	75	3600//3000	280S/M	07536ET3Y280S/M-W22	$12,472	T1	1776	1.25	111	94.5	42.165	460//380-415/660-690	7
		1800//1500	280S/M	07518ET3Y280S/M-W22	$12,353	T1	1738	1.25	116	95.4	42.165	460//380-415/660-690	7
		1200//1000	315S/M	07512ET3Y315S/M-W22	$16,479	T1	2399	1.25	122	95.0	50.157	460//380-415/660-690	7
		900//750	315S/M	07509ET3Y315S/M-W22	$18,647	T1	2701	1.25	127	95.0	50.157	460//380-415/660-690	7
125	90	3600//3000	280S/M	09036ET3Y280S/M-W22	$16,720	T1	1862	1.25	132	95.0	42.165	460//380-415/660-690	7
		1800//1500	280S/M	09018ET3Y280S/M-W22	$15,220	T1	1835	1.25	139	95.4	42.165	460//380-415/660-690	7
		1200//1000	315S/M	09012ET3Y315S/M-W22	$19,448	T1	2601	1.25	146	95.4	50.157	460//380-415/660-690	7
		900//750	315S/M	09009ET3Y315S/M-W22	$21,288	T1	2884	1.25	152	95.0	50.157	460//380-415/660-690	7
150	110	3600//3000	315S/M	11036ET3Y315S/M-W22	$21,018	T1	2382	1.25	163	95.0	48.976	460//380-415/660-690	7
		1800//1500	280S/M	11018ET3Y280S/M-W22	$17,078	T1	2210	1.25	170	95.8	42.165	460//380-415/660-690	7
		1200//1000	315S/M	11012ET3Y315S/M-W22	$22,507	T1	2730	1.25	178	95.8	50.157	460//380-415/660-690	7
		900//750	315L	11009ET3Y315L-W22	$27,910	T1	3008	1.25	186	95.4	54.685	460//380-415/660-690	7
175	132	3600//3000	315S/M	13236ET3Y315S/M-W22	$23,180	T1	2662	1.25	193	95.4	48.976	460//380-415/660-690	7;43
		1800//1500	315S/M	13218ET3Y315S/M-W22	$19,732	T1	2540	1.25	203	96.2	50.157	460//380-415/660-690	7
		1200//1000	315S/M	13212ET3Y315S/M-W22	$25,642	T1	3031	1.25	214	95.8	50.157	460//380-415/660-690	7
		900//750	315L	13209ET3Y315L-W22	$33,687	T1	3796	1.25	223	95.4	54.685	460//380-415/660-690	7;43
200	150	3600//3000	315S/M	15036ET3Y315S/M-W22	$26,249	T1	2682	1.25	219	95.4	48.976	460//380-415/660-690	7
		1800//1500	315S/M	15018ET3Y315S/M-W22	$21,772	T1	2784	1.25	228	96.2	50.157	460//380-415/660-690	7
		1200//1000	315L	15012ET3Y315L-W22	$28,298	T1	3557	1.15	240	95.8	54.685	460//380-415/660-690	7;43
250	185	3600//3000	315S/M	18536ET3Y315S/M-W22	$26,529	T1	2900	1.25	269	95.8	48.976	460//380-415/660-690	7
		1800//1500	315S/M	18518ET3Y315S/M-W22	$26,247	T1	2948	1.25	284	96.2	50.157	460//380-415/660-690	7
		1200//1000	355M/L	18512ET3Y355M/L-W22	$43,876	T1	3666	1.15	311	95.8	58.346	460//380-415/660-690	7
300	220	3600//3000	315L	22036ET3Y315L-W22	$44,212	T1	3468	1.25	315	96.2	53.268	460//380-415/660-690	7;43
		1800//1500	315L	22018ET3Y315L-W22	$36,234	T1	3113	1.25	338	96.2	54.685	460//380-415/660-690	7;43
		1200//1000	355M/L	22012ET3Y355M/L-W22	$46,322	T1	4507	1.15	370	95.8	58.346	460//380-415/660-690	7;43
350	260	3600//3000	355M/L	26036ET3Y355M/L-W22	$50,637	T1	4975	1.15	373	96.2	55.591	460//380-415/660-690	7;43
		1800//1500	355M/L	26018ET3Y355M/L-W22	$43,761	T1	4218	1.15	399	96.2	58.346	460//380-415/660-690	7;43
		1200//1000	355M/L	26012ET3Y355M/L-W22	$53,001	T1	5075	1.15	436	95.9	58.346	460//380-415/660-690	7;43
400	300	3600//3000	355M/L	30036ET3Y355M/L-W22	$66,321	T1	4034	1.15	315	96.2	55.591	460//380-415/660-690	7;43
		1800//1500	355M/L	30018ET3Y355M/L-W22	$60,292	T1	4337	1.00	466	96.2	58.346	460//380-415/660-690	7;43
		1800//1500	355M/L	33018ET3Y355M/L-W22	$64,557	T1	4906	1.15	505	96.5	58.346	460//380-415/660-690	7;43

Please refer to back cover for description of "NOTES"

For detailed specifications, data sheets, drawings and performance curves visit http:// www.weg.net

TEFC – Foot Mount - FF-Flange Motors

HP	kW	RPM	Frame	Catalog Number	List Price	Mult. Symbol	Approx. Shipping Weight (lbs)	Service Factor	FL Amps @ High	FL. Eff (%)	"C" Dimension (in)	Voltage (V)	Notes
0.50	0.37	1800//1500	71	.3718EP3EAL71FF-W22	$340.00	T1	26	1.15	1.06	73.0	9.764	60//50	2;7
0.75	0.55	3600//3000	71	.5536EP3EAL71FF-W22	$366.00	T1	23	1.15	1.14	76.0	9.764	60//50	2;7
0.75	0.55	1800//1500	80	.5518EP3EAL80FF-W22	$383.00	T1	28	1.15	1.25	77.0	10.866	60//50	2;7
1	0.75	1800//1500	90S/L	.7518ET3WAL90S/LFF-W	$479.00	T1	43	1.25	1.47	85.5	12.953	60//50	2;7
1	0.75	1800//1500	90S/L	.7518ET3EAL90S/LFF-W	$479.00	T1	42	1.25	1.47	85.5	12.953	60//50	2;7
2	1.5	1800//1500	90S/L	00158ET3EAL90LFF-W22	$583.00	T1	49	1.25	2.79	86.5	12.953	60//50	2;7
2	1.5	1800//1500	90LFF	00158ET3WAL90LFF-W22	$583.00	T1	51	1.25	2.79	86.5	12.953	60//50	
3	2.2	3600/3000	90LFF	00236ET3WAL90LFF-W22	$815.00	T1	46	1.25	3.85	86.5	12.953	60//50	
3	2.2	1800//1500	100L	00218ET3EAL100LFF-W2	$700.00	T1	66	1.25	4.11	89.5	14.803	60//50	2;7
3	2.2	1800//1500	100LFF	00218ET3WAL100LFF-W2	$700.00	T1	68	1.25	4.05	87.5	14.803	60//50	
4	3	1800//1500	100L	00318ET3WAL100LFF-W2	$742.00	T1	77	1.25	5.33	89.5	14.803	60//50	2;7
2	1.5	1200//1000	100L	00152ET3WAL100LFF-W2	$882.00	T1	76	1.25	3.04	88.5	14.803	50//60	2;7
5.5	4	1800//1500	112M	00418ET3YAL112MFF-W2	$749.00	T1	93	1.25	7.28	89.5	15.472	60//50	2;7
5.5	4	3600//3000	112M	00436ET3YAL112MFF-W2	$944.00	T1	86	1.25	6.67	88.5	15.472	60//50	2;7
5.5	4	1200//1000	132M	00412ET3YAL132MFF-W2	$1,333.00	T1	147	1.25	7.90	89.5	19.291	50//60	2;7
7.5	5.5	1800//1500	132S	00518ET3YAL132SFF-W2	$1,011.00	T1	142	1.25	9.07	91.7	19.291	60//50	2;7
7.5	5.5	3600/3000	132SFF	00536ET3YAL132SFF-W2	$1,223.00	T1	135	1.25	8.97	89.5	19.291	60//50	39
10	7.5	1800//1500	132M	00718ET3YAL132MFF-W2	$1,189.00	T1	159	1.25	12.2	91.7	19.291	60//50	2;7
10	7.5	3600//3000	132S	00736ET3YAL132SFF-W2	$1,371.00	T1	147	1.25	12.3	90.2	19.291	60//50	2;7
20	15	1800//1500	160L	01518ET3Y160LFF-W22	$2,235.00	T1	358	1.25	25.0	93.0	25.276	60//50	7
15	11	1800//1500	160M	01118ET3Y160MFF-W22	$1,843.00	T1	304	1.25	18.2	92.4	23.543	60//50	7
15	11	3600//3000	160M	01136ET3Y160MFF-W22	$2,219.00	T1	304	1.25	17.9	91.7	23.543	60//50	7

Please refer to back cover for description of "NOTES"

For detailed specifications, data sheets, drawings and performance curves visit http:// www.weg.net

Data subject to change without notice.

ATEX Motors

INCREASED SAFETY

TEFC - Ex ec

Ex ec motors do not require certification by any third party entity (a manufacturer's compliance declaration is sufficient). Nevertheless the Ex ec motors manufactured by WEG are certified by Ex NB BASEEFA.

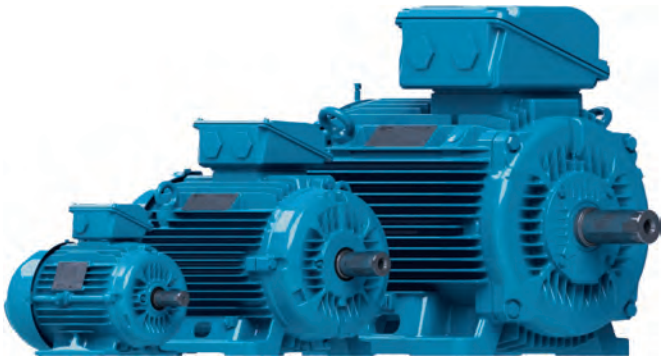

Standard Features:

- 50 Hz and and 60 Hz rated (1.00 Service Factor)
- Class F insulation (Impregnation Resin and magnet Wire are class H)
- F3 mounted as standard
- Stainless Steel Nameplate - Laser etched with high contrast background
- Regreasable ball bearings (Frames 160 and up)
- Gasketed conduit box
- Zone 2 & 22, Groups IIA, IIB and IIC
- Temperature Class T3
- Suitable for WYE/Delta Start
- Design N
- Conductive plastic fan (frames 63 up to 315)
- Aluminum fan (frame 355)
- Thermistor 2 per phase

ADDITIONAL TECHNICAL DATA

CONTACT WEG OR VISIT WWW.WEG.NET

ATEX Motors

NON-SPARKING

TEFC – Ex ec

HP	kW	RPM	Frame	Catalog Number	List Price	Mult. Symbol	Approx. Shipping Weight (lbs)	Service Factor	FL Amps @ High	FL. Eff (%)	"C" Dimension (in)	Voltage (V)	Notes
0.25	0.18	3000//3600	63	E0.1836EP3WAX63F3-W2	$364	XN	22	1.00	0.51	63.6	8.504	220-240/380-415//440-460	1;8;27
		1500//1800	63	E0.1818EP3WAX63F3-W2	$365	XN	20	1.00	0.57	64.7	8.504	220-240/380-415//440-460	1;8;27
		1000//1200	71	E0.1812EP3WAX71F3-W2	$476	XN	29	1.00	0.74	58.6	9.843	220-240/380-415//440-460	1;8;27
0.33	0.25	3000//3600	63	E0.2536EP3WAX63F3-W2	$373	XN	23	1.00	0.71	64.8	8.504	220-240/380-415//440-460	1;8;27
		1500//1800	71	E0.2518EP3WAX71F3-W2	$415	XN	27	1.00	0.74	68.5	9.843	220-240/380-415//440-460	1;8;27
		1000//1200	71	E0.2512EP3WAX71F3-W2	$483	XN	32	1.00	1.05	61.6	9.843	220-240/380-415//440-460	1;8;27
0.5	0.37	3000//3600	71	E0.3736EP3WAX71F3-W2	$408	XN	24	1.00	0.88	71.2	9.843	220-240/380-415//440-460	1;8;27
		1500//1800	71	E0.3718EP3WAX71F3-W2	$427	XN	28	1.00	1.03	72.7	9.843	220-240/380-415//440-460	1;8;27
		1000//1200	80	E0.3712EP3WAX80F3-W2	$507	XN	33	1.00	1.10	67.6	10.906	220-240/380-415//440-460	1;8;27
0.75	0.55	3000//3600	71	E0.5536EP3WAX71F3-W2	$415	XN	29	1.00	1.20	74.1	9.843	220-240/380-415//440-460	1;8;27
		1500//1800	80	E0.5518EP3WAX80F3-W2	$488	XN	38	1.00	1.36	77.1	10.906	220-240/380-415//440-460	1;8;27
		1000//1200	80	E0.5512EP3WAX80F3-W2	$523	XN	36	1.00	1.45	73.1	10.906	220-240/380-415//440-460	1;8;27
1	0.75	3000//3600	80	E0.7536EP3WAX80F3-W2	$499	XN	37	1.00	1.56	79.5	10.906	220-240/380-415//440-460	1;8;27
		3000//3600	80	E0.7536ET3WAX80F3-W2	$659	XN	27	1.00	1.63	81.1	10.906	220-240/380-415//440-460	1;8;27
		1500//1800	80	E0.7518EP3WAX80F3-W2	$507	XN	39	1.00	1.61	80.1	10.906	220-240/380-415//440-460	1;8;27
		1500//1800	80	E0.7518ET3WAX80F3-W2	$670	XN	39	1.00	1.60	82.8	10.906	220-240/380-415//440-460	1;8;27
		1000//1200	90S	E0.7512EP3WAX90SF3-W	$660	XN	48	1.00	1.92	76.4	11.969	220-240/380-415//440-460	1;8;27
		1000//1200	L90S	E0.7512ET3WAXL90SF3W	$872	XN	51	1.00	1.91	79.1	13.169	220-240/380-415//440-460	1;8;27
1.5	1.1	3000//3600	80	E00136EP3WAX80F3-W22	$538	XN	41	1.00	2.33	80.2	10.906	220-240/380-415//440-460	1;8;27
		3000//3600	80	E00136ET3WAX80F3-W22	$711	XN	35	1.00	2.32	83.4	10.906	220-240/380-415//440-460	1;8;27
		1500//1800	90S	E00118EP3WAX90SF3-W2	$578	XN	53	1.00	2.36	82.1	11.969	220-240/380-415//440-460	1;8;27
		1500//1800	90S	E00118ET3WAX90SF3-W2	$763	XN	51	1.00	2.34	84.8	11.969	220-240/380-415//440-460	1;8;27
		1000//1200	90L	E00112EP3WAX90LF3-W2	$700	XN	58	1.00	2.80	78.1	12.953	220-240/380-415//440-460	1;8;27
		1000//1200	100L	E00112ET3WAX100LF3-W	$924	XN	126	1.00	2.68	81.5	14.803	220-240/380-415//440-460	1;8;27
2	1.5	3000//3600	90S	E00156EP3WAX90SF3-W2	$614	XN	45	1.00	3.08	82.5	11.969	220-240/380-415//440-460	1;8;27
		3000//3600	90S	E00156ET3WAX90SF3-W2	$811	XN	50	1.00	3.06	85.2	11.969	220-240/380-415//440-460	1;8;27
		1500//1800	90L	E00158EP3WAX90LF3-W2	$673	XN	56	1.00	3.22	83.1	12.953	220-240/380-415//440-460	1;8;27
		1500//1800	90L	E00158ET3WAX90LF3-W2	$889	XN	59	1.00	3.15	86.1	12.953	220-240/380-415//440-460	1;8;27
		1000//1200	100L	E00152EP3WAX100LF3-W	$872	XN	73	1.00	3.71	80.3	14.803	220-240/380-415//440-460	1;8;27
		1000//1200	100L	E00152ET3WAX100LF3-W	$1,152	XN	98	1.00	3.71	82.8	14.803	220-240/380-415//440-460	1;8;27
3	2.2	3000//3600	90L	E00236EP3WAX90LF3-W2	$700	XN	63	1.00	4.56	83.9	12.953	220-240/380-415//440-460	1;8;27
		3000//3600	90L	E00236ET3WAX90LF3-W2	$924	XN	56	1.00	4.37	86.5	12.953	220-240/380-415//440-460	1;8;27
		1500//1800	100L	E00218EP3WAX100LF3-W	$845	XN	85	1.00	4.56	84.9	14.803	220-240/380-415//440-460	1;8;27
		1500//1800	100L	E00218ET3WAX100LF3-W	$1,116	XN	77	1.00	4.50	87.2	14.803	220-240/380-415//440-460	1;8;27
		1000//1200	112M	E00212EP3YAX112MF3-W	$1,181	XN	87	1.00	5.34	83.0	15.512	380-415/660-690//440-460	1;8;27
		1000//1200	112M	E00212ET3YAX112MF3-W	$1,561	XN	110	1.00	5.16	84.7	15.512	380-415/660-690//440-460	1;8;27
4	3	3000//3600	100L	E00336EP3WAX100LF3-W	$916	XN	89	1.00	5.85	85.0	14.803	220-240/380-415//440-460	1;8;27
		3000//3600	100L	E00336ET3WAX100LF3-W	$1,210	XN	80	1.00	5.68	87.4	14.803	220-240/380-415//440-460	1;8;27
		1500//1800	100L	E00318EP3WAX100LF3-W	$1,016	XN	86	1.00	6.07	86.0	14.803	220-240/380-415//440-460	1;8;27
		1500//1800	L100L	E00318ET3WAXL100LF3W	$1,342	XN	86	1.00	6.07	88.1	16.457	220-240/380-415//440-460	1;8;27
		1000//1200	132S	E00312EP3YAX132SF3-W	$1,684	XN	140	1.00	7.34	83.6	17.795	380-415/660-690//440-460	1;8;27
		1000//1200	132S	E00312ET3YAX132SF3-W	$2,225	XN	147	1.00	6.84	86.0	17.795	380-415/660-690//440-460	1;8;27
5.5	4	3000//3600	112M	E00436EP3YAX112MF3-W	$1,174	XN	87	1.00	7.50	86.3	15.512	380-415/660-690//440-460	1;8;27
		3000//3600	112M	E00436ET3YAX112MF3-W	$1,552	XN	94	1.00	7.49	88.4	15.512	380-415/660-690//440-460	1;8;27
		1500//1800	112M	E00418EP3YAX112MF3-W	$1,388	XN	96	1.00	8.20	87.0	15.512	380-415/660-690//440-460	1;8;27
		1500//1800	112M	E00418ET3YAX112MF3-W	$1,712	XN	100	1.00	8.09	89.3	15.512	380-415/660-690//440-460	1;8;27
		1000//1200	132M	E00412EP3YAX132MF3-W	$1,910	XN	155	1.00	9.50	84.9	19.252	380-415/660-690//440-460	1;8;27
		1000//1200	132M	E00412ET3YAX132MF3-W	$2,524	XN	158	1.00	9.03	86.8	19.252	380-415/660-690//440-460	1;8;27

continued on next page

Please refer to back cover for description of "NOTES"

For detailed specifications, data sheets, drawings and performance curves visit http:// www.weg.net

Data subject to change without notice.

TEFC – Ex ec - *continued*

HP	kW	RPM	Frame	Catalog Number	List Price	Mult. Symbol	Approx. Shipping Weight (lbs)	Service Factor	FL Amps @ High	FL. Eff (%)	"C" Dimension (in)	Voltage (V)	Notes
7.5	5.5	3000//3600	132S	E00536EP3YAX132SF3-W	$1,613	XN	137	1.00	10.5	88.0	17.795	380-415/660-690//440-460	1;8;27
		3000//3600	132S	E00536ET3YAX132SF3-W	$2,132	XN	145	1.00	10.6	89.2	17.795	380-415/660-690//440-460	1;8;27
		1500//1800	132S	E00518EP3YAX132SF3-W	$1,798	XN	162	1.00	10.4	87.7	17.795	380-415/660-690//440-460	1;8;27
		1500//1800	132S	E00518ET3YAX132SF3-W	$2,218	XN	150	1.00	10.1	89.8	17.795	380-415/660-690//440-460	1;8;27
		1000//1200	132M	E00512EP3YAX132MF3-W	$2,312	XN	164	1.00	12.9	86.2	19.252	380-415/660-690//440-460	1;8;27
		1000//1200	132M/L	E00512ET3YAX132MLF3W	$3,052	XN	207	1.00	12.6	88.0	20.276	380-415/660-690//440-460	1;8;27
10	7.5	3000//3600	132S	E00736EP3YAX132SF3-W	$1,833	XN	144	1.00	13.8	88.7	17.795	380-415/660-690//440-460	1;8;27
		3000//3600	132S	E00736ET3YAX132SF3-W	$2,422	XN	158	1.00	13.9	90.3	17.795	380-415/660-690//440-460	1;8;27
		1500//1800	132M	E00718EP3YAX132MF3-W	$2,135	XN	164	1.00	13.9	89.4	19.252	380-415/660-690//440-460	1;8;27
		1500//1800	132M	E00718ET3YAX132MF3-W	$2,634	XN	167	1.00	13.9	90.4	19.252	380-415/660-690//440-460	1;8;27
		1000//1200	160M	E00712EP3YAX160MF3-W	$3,221	XN	286	1.00	14.7	88.5	23.543	380-415/660-690//440-460	1;8;27
		1000//1200	160M	E00712ET3YAX160MF3-W	$4,256	XN	298	1.00	14.6	89.1	23.543	380-415/660-690//440-460	1;8;27
15	11	3000//3600	160M	E01136EP3YAX160MF3-W	$3,150	XN	266	1.00	20.1	90.6	23.543	380-415/660-690//440-460	1;8;27
		3000//3600	160M	E01136ET3YAX160MF3-W	$4,163	XN	291	1.00	19.7	91.4	23.543	380-415/660-690//440-460	1;8;27
		1500//1800	160M	E01118EP3YAX160MF3-W	$3,331	XN	269	1.00	20.9	90.3	23.543	380-415/660-690//440-460	1;8;27
		1500//1800	160M	E01118ET3YAX160MF3-W	$4,108	XN	287	1.00	20.6	91.5	23.543	380-415/660-690//440-460	1;8;27
		1000//1200	160L	E01112EP3YAX160LF3-W	$4,243	XN	337	1.00	21.7	89.3	25.276	380-415/660-690//440-460	1;8;27
		1000//1200	160L	E01112ET3YAX160LF3-W	$5,607	XN	347	1.00	21.7	90.3	25.276	380-415/660-690//440-460	1;8;27
20	15	3000//3600	160M	E01536EP3YAX160MF3-W	$3,398	XN	284	1.00	27.2	91.4	23.543	380-415/660-690//440-460	1;8;27
		3000//3600	160M	E01536ET3YAX160MF3-W	$4,490	XN	302	1.00	27.7	91.9	23.543	380-415/660-690//440-460	1;8;27
		1500//1800	160L	E01518EP3YAX160LF3-W	$3,622	XN	313	1.00	28.2	91.2	25.276	380-415/660-690//440-460	1;8;27
		1500//1800	160L	E01518ET3YAX160LF3-W	$4,696	XN	335	1.00	28.0	92.1	25.276	380-415/660-690//440-460	1;8;27
		1000//1200	180L	E01512EP3YAX180LF3-W	$5,388	XN	411	1.00	27.1	90.6	27.638	380-415/660-690//440-460	1;8;27
		1000//1200	180L	E01512ET3YAX180LF3-W	$7,119	XN	435	1.00	27.3	91.2	27.638	380-415/660-690//440-460	1;8;27
25	18.5	3000//3600	160L	E01836EP3YAX160LF3-W	$3,960	XN	356	1.00	33.2	92.2	25.276	380-415/660-690//440-460	1;8;27
		3000//3600	160L	E01836ET3YAX160LF3-W	$5,233	XN	335	1.00	33.6	92.4	25.276	380-415/660-690//440-460	1;8;27
		1500//1800	180M	E01818EP3YAX180MF3-W	$5,439	XN	389	1.00	34.7	91.7	26.142	380-415/660-690//440-460	1;8;27
		1500//1800	180M	E01818ET3YAX180MF3-W	$6,708	XN	397	1.00	34.7	92.6	26.142	380-415/660-690//440-460	1;8;27
		1000//1200	200L	E01812EP3YAX200LF3-W	$7,499	XN	502	1.00	35.2	91.3	30.197	380-415/660-690//440-460	1;8;27
		1000//1200	200L	E01812ET3YAX200LF3-W	$9,910	XN	504	1.00	36.0	91.7	30.197	380-415/660-690//440-460	1;8;27
30	22	3000//3600	180M	E02236EP3YAX180MF3-W	$5,140	XN	389	1.00	38.1	92.4	26.142	380-415/660-690//440-460	1;8;27
		3000//3600	180M	E02236ET3YAX180MF3-W	$6,792	XN	402	1.00	39.3	92.7	26.142	380-415/660-690//440-460	1;8;27
		1500//1800	180L	E02218EP3YAX180LF3-W	$5,934	XN	446	1.00	39.9	92.4	27.638	380-415/660-690//440-460	1;8;27
		1500//1800	180L	E02218ET3YAX180LF3-W	$7,319	XN	435	1.00	40.6	93.0	27.638	380-415/660-690//440-460	1;8;27
		1000//1200	200L	E02212EP3YAX200LF3-W	$7,956	XN	526	1.00	41.8	91.6	30.197	380-415/660-690//440-460	1;8;27
		1000//1200	200L	E02212ET3YAX200LF3-W	$10,539	XN	526	1.00	42.0	92.2	30.197	380-415/660-690//440-460	1;8;27
40	30	3000//3600	200L	E03036EP3YAX200LF3-W	$7,515	XN	539	1.00	52.2	93.0	30.197	380-415/660-690//440-460	1;8;27
		3000//3600	200L	E03036ET3YAX200LF3-W	$9,931	XN	548	1.00	54.6	93.3	30.197	380-415/660-690//440-460	1;8;27
		1500//1800	200L	E03018EP3YAX200LF3-W	$7,716	XN	520	1.00	56.9	92.9	30.197	380-415/660-690//440-460	1;8;27
		1500//1800	200L	E03018ET3YAX200LF3-W	$10,004	XN	533	1.00	56.4	93.6	30.197	380-415/660-690//440-460	1;8;27
		1000//1200	225S/M	E03012EP3YAX225SMF3W	$12,034	XN	906	1.00	54.9	92.7	34.882	380-415/660-690//440-460	1;8;27
		1000//1200	225S/M	E03012ET3YAX225SMF3W	$15,902	XN	952	1.00	54.7	93.0	34.882	380-415/660-690//440-460	1;8;27
50	37	3000//3600	200L	E03736EP3YAX200LF3-W	$7,987	XN	592	1.00	64.0	93.5	30.197	380-415/660-690//440-460	1;8;27
		3000//3600	200L	E03736ET3YAX200LF3-W	$10,554	XN	581	1.00	67.0	93.7	30.197	380-415/660-690//440-460	1;8;27
		1500//1800	225S/M	E03718EP3YAX225SMF3W	$10,284	XN	868	1.00	64.9	93.3	34.882	380-415/660-690//440-460	1;8;27
		1500//1800	225S/M	E03718ET3YAX225SMF3W	$13,553	XN	920	1.00	66.0	93.9	34.882	380-415/660-690//440-460	1;8;27
		1000//1200	250S/M	E03712EP3YAX250SMF3W	$13,422	XN	1086	1.00	65.0	93.2	37.992	380-415/660-690//440-460	1;8;27
		1000//1200	250S/M	E03712ET3YAX250SMF3W	$17,736	XN	1068	1.00	65.5	93.5	37.992	380-415/660-690//440-460	1;8;27

continued on next page

Please refer to back cover for description of "NOTES"

For detailed specifications, data sheets, drawings and performance curves visit http://www.weg.net

NON-SPARKING

TEFC – Ex ec - *continued*

HP	kW	RPM	Frame	Catalog Number	List Price	Mult. Symbol	Approx. Shipping Weight (lbs)	Service Factor	FL Amps @ High	FL. Eff (%)	"C" Dimension (in)	Voltage (V)	Notes
60	45	3000//3600	225S/M	E04536EP3YAX225SMF3W	$12,588	XN	899	1.00	75.8	93.8	33.701	380-415/660-690//440-460	1;8;27
		3000//3600	225S/M	E04536ET3YAX225SMF3W	$16,634	XN	1011	1.00	75.4	94.3	33.701	380-415/660-690//440-460	1;8;27
		1500//1800	225S/M	E04518EP3YAX225SMF3W	$11,696	XN	914	1.00	81.5	93.7	34.882	380-415/660-690//440-460	1;8;27
		1500//1800	225S/M	E04518ET3YAX225SMF3W	$15,411	XN	996	1.00	79.0	94.4	34.882	380-415/660-690//440-460	1;8;27
		1000//1200	280S/M	E04512EP3YAX280SMF3W	$20,481	XN	1478	1.00	83.7	93.5	42.165	380-415/660-690//440-460	1;8;27
		1000//1200	280S/M	E04512ET3YAX280SMF3W	$27,064	XN	1589	1.00	82.2	94.0	42.165	380-415/660-690//440-460	1;8;27
75	55	3000//3600	250S/M	E05536EP3YAX250SMF3W	$14,893	XN	1031	1.00	92.5	94.0	37.992	380-415/660-690//440-460	1;8;27
		3000//3600	250S/M	E05536ET3YAX250SMF3W	$19,680	XN	1134	1.00	93.2	94.4	37.992	380-415/660-690//440-460	1;8;27
		1500//1800	250S/M	E05518EP3YAX250SMF3W	$14,354	XN	1099	1.00	94.6	94.1	37.992	380-415/660-690//440-460	1;8;27
		1500//1800	250S/M	E05518ET3YAX250SMF3W	$18,916	XN	1091	1.00	97.5	94.6	37.992	380-415/660-690//440-460	1;8;27
		1000//1200	280S/M	E05512EP3YAX280SMF3W	$20,781	XN	1551	1.00	99.4	93.9	42.165	380-415/660-690//440-460	1;8;27
		1000//1200	280S/M	E05512ET3YAX280SMF3W	$27,355	XN	1644	1.00	100	94.3	42.165	380-415/660-690//440-460	1;8;27
100	75	3000//3600	280S/M	E07536EP3YAX280SMF3W	$20,430	XN	1553	1.00	127	94.3	42.165	380-415/660-690//440-460	1;8;27
		3000//3600	280S/M	E07536ET3YAX280SMF3W	$26,996	XN	1677	1.00	126	94.9	42.165	380-415/660-690//440-460	1;8;27
		1500//1800	280S/M	E07518EP3YAX280SMF3W	$20,544	XN	1573	1.00	130	94.4	42.165	380-415/660-690//440-460	1;8;27
		1500//1800	280S/M	E07518ET3YAX280SMF3W	$27,072	XN	1567	1.00	130	95.2	42.165	380-415/660-690//440-460	1;8;27
		1000//1200	315S/M	E07512EP3YAX315SMF3W	$23,092	XN	2010	1.00	137	94.2	50.157	380-415/660-690//440-460	1;8;27
		1000//1200	315S/M	E07512ET3YAX315SMF3W	$30,515	XN	2183	1.00	137	95.0	50.157	380-415/660-690//440-460	1;8;27
125	90	3000//3600	280S/M	E09036EP3YAX280SMF3W	$21,712	XN	1604	1.00	152	94.5	42.165	380-415/660-690//440-460	1;8;27
		3000//3600	280S/M	E09036ET3YAX280SMF3W	$28,691	XN	1744	1.00	149	95.2	42.165	380-415/660-690//440-460	1;8;27
		1500//1800	280S/M	E09018EP3YAX280SMF3W	$21,307	XN	1648	1.00	154	94.7	42.165	380-415/660-690//440-460	1;8;27
		1500//1800	280S/M	E09018ET3YAX280SMF3W	$28,077	XN	1722	1.00	154	95.4	42.165	380-415/660-690//440-460	1;8;27
		1000//1200	315S/M	E09012EP3YAX315SMF3W	$27,076	XN	2133	1.00	159	94.6	50.157	380-415/660-690//440-460	1;8;27
		1000//1200	315S/M	E09012ET3YAX315SMF3W	$35,779	XN	2337	1.00	162	95.2	50.157	380-415/660-690//440-460	1;8;27
150	110	3000//3600	315S/M	E11036EP3YAX315SMF3W	$26,144	XN	2091	1.00	183	94.9	48.976	380-415/660-690//440-460	1;8;27
		3000//3600	315S/M	E11036ET3YAX315SMF3W	$34,547	XN	2139	1.00	184	95.4	48.976	380-415/660-690//440-460	1;8;27
		1500//1800	315S/M	E11018EP3YAX315SMF3W	$27,068	XN	2120	1.00	192	95.0	50.157	380-415/660-690//440-460	1;8;27
		1500//1800	315S/M	E11018ET3YAX315SMF3W	$35,670	XN	2249	1.00	189	95.5	50.157	380-415/660-690//440-460	1;8;27
		1000//1200	315S/M	E11012EP3YAX315SMF3W	$34,367	XN	2294	1.00	194	94.9	50.157	380-415/660-690//440-460	1;8;27
		1000//1200	315S/M	E11012ET3YAX315SMF3W	$45,413	XN	2447	1.00	196	95.1	50.157	380-415/660-690//440-460	1;8;27
175	132	3000//3600	315S/M	E13236EP3YAX315SMF3W	$29,862	XN	2217	1.00	217	95.2	48.976	380-415/660-690//440-460	1;8;27
		3000//3600	315S/M	E13236ET3YAX315SMF3W	$39,500	XN	2249	1.00	218	95.6	48.976	380-415/660-690//440-460	1;8;27
		1500//1800	315S/M	E13218EP3YAX315SMF3W	$31,689	XN	2265	1.00	224	95.2	50.157	380-415/660-690//440-460	1;8;27
		1500//1800	315S/M	E13218ET3YAX315SMF3W	$42,877	XN	2381	1.00	226	95.6	50.157	380-415/660-690//440-460	1;8;27
		1000//1200	315S/M	E13212EP3YAX315SMF3W	$52,853	XN	2448	1.00	233	95.0	50.157	380-415/660-690//440-460	1;8;27
		1000//1200	315S/M	E13212ET3YAX315SMF3W	$76,749	XN	2580	1.00	240	95.6	50.157	380-415/660-690//440-460	1;8;27
200	150	3000//3600	315S/M	E15036EP3YAX315SMF3W	$31,360	XN	2073	1.00	253	94.8	48.976	220-240/380-415//440-460	1;8;27
		3000//3600	315S/M	E15036ET3YAX315SMF3W	$41,396	XN	2469	1.00	245	95.6	48.976	380-415/660-690//440-460	1;8;27
		1500//1800	315S/M	E15018EP3YAX315SMF3W	$33,286	XN	2073	1.00	254	95.4	50.157	220-240/380-415//440-460	1;8;27
		1500//1800	315S/M	E15018ET3YAX315SMF3W	$43,938	XN	2425	1.00	259	96.0	50.157	380-415/660-690//440-460	1;8;27
		1000//1200	315L	E15012ET3YAX315LF3W2	$82,712	XN	2800	1.00	269	95.7	54.685	380-415/660-690//440-460	1;8;27
		1000//1200	355M/L	E15012EP3YAX355MLF3W	$62,660	XN	2073	1.00	291	95.0	58.346	220-240/380-415//440-460	1;8;27

continued on next page

Please refer to back cover for description of "NOTES"

For detailed specifications, data sheets, drawings and performance curves visit http:// www.weg.net

Data subject to change without notice.

TEFC – Ex ec - *continued*

HP	kW	RPM	Frame	Catalog Number	List Price	Mult. Symbol	Approx. Shipping Weight (lbs)	Service Factor	FL Amps @ High	FL. Eff (%)	"C" Dimension (in)	Voltage (V)	Notes
220	160	3000//3600	315S/M	E16036EP3YAX315SMF3W	$38,870	XN	2778	1.00	262	95.3	48.976	380-415/660-690//440-460	1;8;27
		3000//3600	315S/M	E16036ET3YAX315SMF3W	$51,363	XN	2535	1.00	264	95.8	48.976	380-415/660-690//440-460	1;8;27
		1500//1800	315S/M	E16018EP3YAX315SMF3W	$36,046	XN	2385	1.00	271	95.4	50.157	380-415/660-690//440-460	1;8;27
		1500//1800	315S/M	E16018ET3YAX315SMF3W	$47,534	XN	2535	1.00	273	95.8	50.157	380-415/660-690//440-460	1;8;27
		1000//1200	315L	E16012EP3YAX315LF3-W	$60,176	XN	2862	1.00	282	95.2	54.685	380-415/660-690//440-460	1;8;27
		1000//1200	315L	E16012ET3YAX315LF3-W	$79,990	XN	2866	1.00	287	95.8	54.685	380-415/660-690//440-460	1;8;27
		1000//1200	355M/L	E16012EP3YAX355MLF3W	$65,792	XN	3488	1.00	290	96.0	58.346	380-415/660-690//440-460	1;8;27
		1000//1200	355M/L	E16012ET3YAX355MLF3W	$86,940	XN	3592	1.00	302	95.8	58.346	380-415/660-690//440-460	1;8;27
270	200	3000//3600	355M/L	E20036EP3YAX355MLF3W	$66,531	XN	3922	1.00	320	95.6	55.591	380-415/660-690//440-460	1;8;27
		1500//1800	315L	E20018ET3YAX315LF3-W	$70,770	XN	2800	1.00	333	96.1	54.685	380-415/660-690//440-460	1;8;27
		1500//1800	355M/L	E20018EP3YAX355MLF3W	$64,081	XN	3380	1.00	346	95.6	58.346	380-415/660-690//440-460	1;8;27
		1500//1800	355M/L	E20018ET3YAX355MLF3W	$76,925	XN	3580	1.00	344	96.3	58.346	380-415/660-690//440-460	1;8;27
		1000//1200	315L	E20012EP3YAX315LF3-W	$66,948	XN	3435	1.00	356	95.4	54.685	380-415/660-690//440-460	1;8;27
		1000//1200	355M/L	E20012EP3YAX355MLF3W	$74,007	XN	3907	1.00	368	95.7	58.346	380-415/660-690//440-460	1;8;27
		1000//1200	355M/L	E20012ET3YAX355MLF3W	$97,795	XN	3857	1.00	367	95.9	58.346	380-415/660-690//440-460	1;8;27
340	250	3000//3600	315L	E25036EP3YAX315LF3-W	$73,948	XN	3351	1.00	400	95.6	53.268	380-415/660-690//440-460	1;8;27
		3000//3600	355M/L	E25036EP3YAX355MLF3W	$82,191	XN	4275	1.00	392	96.4	55.591	380-415/660-690//440-460	1;8;27
		1500//1800	315L	E25018EP3YAX315LF3-W	$62,457	XN	3239	1.00	417	95.9	54.685	380-415/660-690//440-460	1;8;27
		1500//1800	315L	E25018ET3YAX315LF3-W	$76,550	XN	3307	1.00	424	96.4	54.685	380-415/660-690//440-460	1;8;27
		1500//1800	355M/L	E25018EP3YAX355MLF3W	$67,456	XN	3525	1.00	432	95.8	58.346	380-415/660-690//440-460	1;8;27
		1500//1800	355M/L	E25018ET3YAX355MLF3W	$83,195	XN	3702	1.00	424	96.4	58.346	380-415/660-690//440-460	1;8;27
		1000//1200	355M/L	E25012EP3YAX355MLF3W	$88,256	XN	4229	1.00	461	95.5	58.346	380-415/660-690//440-460	1;8;27
		1000//1200	355M/L	E25012ET3YAX355MLF3W	$111,338	XN	4320	1.00	464	96.0	58.346	380-415/660-690//440-460	1;8;27

Please refer to back cover for description of "NOTES"

For detailed specifications, data sheets, drawings and performance curves visit http://www.weg.net

ATEX Motors

EXPLOSION PROOF

TEFC - Ex db

- 50 Hz and and 60 Hz rated (1.00 Service Factor)
- Class F insulation (Impregnation Resin and magnet Wire are class H)
- F3 mounted as standard
- Stainless Steel Nameplate - Laser etched with high contrast background
- Regreasable ball bearings (Frames 225 and up)
- Gasketed conduit box
- Zone 1 and 2, Groups IIA and IIB, class of temperature T4
- Suitable for WYE/Delta Start
- Design N
- Conductive plastic fan (frames 63 up to 315)
- Aluminum fan (frame 355)
- Lip Seal on both endshields
- Thermistors 1 per phase

ADDITIONAL TECHNICAL DATA

CONTACT WEG OR VISIT WWW.WEG.NET

TEFC – Ex db - IE2

HP	kW	RPM	Frame	Catalog Number	List Price	Mult. Symbol	Approx. Shipping Weight (lbs)	Service Factor	FL Amps @ High	FL. Eff (%)	"C" Dimension (in)	Voltage (V)	Notes
1	0.75	3000//3600	90S/L	**E0.7536XP3WAX90SF3-W**	**$1,267**	XD	68	1.00	1.69	79.2	15.118	220-240/380-415//440-460	1;8;27
		1500//1800	90S/L	**E0.7518XP3WAX90SF3-W**	**$1,283**	XD	91	1.00	1.66	80.4	15.118	220-240/380-415//440-460	1;8;27
		1000//1200	90S/L	**E0.7512XP3WAX90LF3-W**	**$1,199**	XD	75	1.00	1.92	76.4	15.118	220-240/380-415//440-460	1;8;27
1.5	1.1	3000//3600	90S/L	**E00136XP3WAX90SF3-W**	**$1,318**	XD	68	1.00	2.33	81.0	15.118	220-240/380-415//440-460	1;8;27
		1500//1800	90S/L	**E00118XP3WAX90LF3-W**	**$1,334**	XD	75	1.00	2.45	82.1	15.118	220-240/380-415//440-460	1;8;27
		1000//1200	90S/L	**E00112XP3WAX90LF3-W**	**$1,588**	XD	75	1.00	2.80	78.1	15.118	220-240/380-415//440-460	1;8;27
2	1.5	3000//3600	90S/L	**E00156XP3WAX90SF3-W**	**$1,371**	XD	60	1.00	3.12	82.5	15.118	220-240/380-415//440-460	1;8;27
		1500//1800	100L	**E00158XP3WAX100LF3-W**	**$1,488**	XD	123	1.00	3.16	83.7	17.244	220-240/380-415//440-460	1;8;27
		1000//1200	100L	**E00152XP3WAX100LF3-W**	**$1,757**	XD	101	1.00	3.71	80.3	17.244	220-240/380-415//440-460	1;8;27
3	2.2	3000//3600	90S/L	**E00236XP3WAX90LF3-W**	**$1,534**	XD	51	1.00	4.56	83.9	15.118	220-240/380-415//440-460	1;8;27
		1500//1800	100L	**E00218XP3WAX100LF3-W**	**$1,783**	XD	136	1.00	4.56	84.9	17.244	220-240/380-415//440-460	1;8;27
		1000//1200	112M	**E00212XP3YAX112MF3-W**	**$2,040**	XD	126	1.00	6.04	84.4	17.953	380-415/660-690//440-460	1;8;27
4	3	3000//3600	100L	**E00336XP3WAX100LF3-W**	**$1,918**	XD	130	1.00	5.85	85.0	17.244	220-240/380-415//440-460	1;8;27
		1500//1800	112M	**E00318XP3YAX112MF3-W**	**$2,137**	XD	145	1.00	6.09	87.9	17.953	380-415/660-690//440-460	1;8;27
		1000//1200	132S/M	**E00312XP3YAX132SF3-W**	**$3,224**	XD	180	1.00	7.34	83.6	20.630	380-415/660-690//440-460	1;8;27
5.5	4	3000//3600	112M	**E00436XP3YAX112MF3-W**	**$2,414**	XD	164	1.00	7.50	86.3	17.953	380-415/660-690//440-460	1;8;27
		1500//1800	112M	**E00418XP3YAX112MF3-W**	**$2,468**	XD	147	1.00	8.00	87.0	17.953	380-415/660-690//440-460	1;8;27
		1000//1200	132S/M	**E00412XP3YAX132MF3-W**	**$3,607**	XD	202	1.00	9.50	84.9	20.630	380-415/660-690//440-460	1;8;27
7.5	5.5	3000//3600	132S/M	**E00536XP3YAX132SF3-W**	**$3,083**	XD	239	1.00	10.6	87.3	20.630	380-415/660-690//440-460	1;8;27
		1500//1800	132S/M	**E00518XP3YAX132SF3-W**	**$3,025**	XD	247	1.00	10.4	87.7	20.630	380-415/660-690//440-460	1;8;27
		1000//1200	132S/M	**E00512XP3YAX132MF3-W**	**$3,800**	XD	219	1.00	12.9	86.2	20.630	380-415/660-690//440-460	1;8;27
10	7.5	3000//3600	132S/M	**E00736XP3YAX132SF3-W**	**$3,556**	XD	252	1.00	13.8	88.7	20.630	380-415/660-690//440-460	1;8;27
		1500//1800	132S/M	**E00718XP3YAX132MF3-W**	**$3,685**	XD	224	1.00	13.9	89.4	20.630	380-415/660-690//440-460	1;8;27
		1000//1200	160M/L	**E00712XP3YAX160MF3-W**	**$5,017**	XD	350	1.00	14.7	88.5	28.228	380-415/660-690//440-460	1;8;27
15	11	3000//3600	160M/L	**E01136XP3YAX160MF3-W**	**$4,148**	XD	446	1.00	20.1	90.6	28.228	380-415/660-690//440-460	1;8;27
		1500//1800	160M/L	**E01118XP3YAX160MF3-W**	**$4,151**	XD	359	1.00	20.9	90.3	28.228	380-415/660-690//440-460	1;8;27
		1000//1200	160M/L	**E01112XP3YAX160LF3-W**	**$5,281**	XD	392	1.00	21.7	89.3	28.228	380-415/660-690//440-460	1;8;27
20	15	3000//3600	160M/L	**E01536XP3YAX160MF3-W**	**$4,924**	XD	461	1.00	27.2	91.4	28.228	380-415/660-690//440-460	1;8;27
		1500//1800	160M/L	**E01518XP3YAX160LF3-W**	**$4,608**	XD	381	1.00	28.2	91.2	28.228	380-415/660-690//440-460	1;8;27
		1000//1200	180M/L	**E01512XP3YAX180LF3-W**	**$6,436**	XD	512	1.00	27.1	90.6	29.606	380-415/660-690//440-460	1;8;27
25	18.5	3000//3600	160M/L	**E01836XP3YAX160LF3-W**	**$5,915**	XD	409	1.00	33.2	92.2	28.228	380-415/660-690//440-460	1;8;27
		1500//1800	180M/L	**E01818XP3YAX180MF3-W**	**$6,059**	XD	584	1.00	34.7	91.7	29.606	380-415/660-690//440-460	1;8;27
		1000//1200	200M/L	**E01812XP3YAX200LF3-W**	**$8,379**	XD	617	1.00	35.2	91.3	32.323	380-415/660-690//440-460	1;8;27
30	22	3000//3600	180M/L	**E02236XP3YAX180MF3-W**	**$7,099**	XD	582	1.00	38.1	92.4	29.606	380-415/660-690//440-460	1;8;27
		1500//1800	180M/L	**E02218XP3YAX180LF3-W**	**$6,706**	XD	478	1.00	39.9	92.4	29.606	380-415/660-690//440-460	1;8;27
		1000//1200	200M/L	**E02212XP3YAX200LF3-W**	**$9,487**	XD	529	1.00	41.8	91.6	32.323	380-415/660-690//440-460	1;8;27
40	30	3000//3600	200M/L	**E03036XP3YAX200LF3-W**	**$8,824**	XD	647	1.00	52.2	93.0	32.323	380-415/660-690//440-460	1;8;27
		1500//1800	200M/L	**E03018XP3YAX200LF3-W**	**$8,717**	XD	684	1.00	56.9	92.9	32.323	380-415/660-690//440-460	1;8;27
		1000//1200	225S/M	**E03012XP3YAX225SMF3W**	**$12,936**	XD	937	1.00	54.9	92.7	37.441	380-415/660-690//440-460	1;8;27
50	37	3000//3600	200M/L	**E03736XP3YAX200LF3-W**	**$10,812**	XD	573	1.00	64.0	93.5	32.323	380-415/660-690//440-460	1;8;27
		1500//1800	225S/M	**E03718XP3YAX225SMF3W**	**$11,099**	XD	998	1.00	64.9	93.3	37.441	380-415/660-690//440-460	1;8;27
		1000//1200	250S/M	**E03712XP3YAX250SMF3W**	**$15,176**	XD	1103	1.00	65.0	93.2	39.724	380-415/660-690//440-460	1;8;27
60	45	3000//3600	225S/M	**E04536XP3YAX225SMF3W**	**$17,255**	XD	1075	1.00	75.8	93.8	36.260	380-415/660-690//440-460	1;8;27
		1500//1800	225S/M	**E04518XP3YAX225SMF3W**	**$12,846**	XD	970	1.00	81.5	93.7	37.441	380-415/660-690//440-460	1;8;27
		1000//1200	280S/M	**E04512XP3YAX280SMF3W**	**$21,544**	XD	1793	1.00	83.7	93.5	44.705	380-415/660-690//440-460	1;8;27

continued on next page

Please refer to back cover for description of "NOTES"

For detailed specifications, data sheets, drawings and performance curves visit http://www.weg.net

EXPLOSION PROOF

TEFC – Ex db - IE2 - *continued*

HP	kW	RPM	Frame	Catalog Number	List Price	Mult. Symbol	Approx. Shipping Weight (lbs)	Service Factor	FL Amps @ High	FL. Eff (%)	"C" Dimension (in)	Voltage (V)	Notes
75	55	3000//3600	250S/M	**E05536XP3YAX250SMF3W**	**$21,608**	XD	1227	1.00	92.5	94.0	39.724	380-415/660-690//440-460	1;8;27
		1500//1800	250S/M	**E05518XP3YAX250SMF3W**	**$19,034**	XD	1312	1.00	94.6	94.1	39.724	380-415/660-690//440-460	1;8;27
		1000//1200	280S/M	**E05512XP3YAX280SMF3W**	**$27,320**	XD	1704	1.00	99.4	93.9	44.705	380-415/660-690//440-460	1;8;27
100	75	3000//3600	280S/M	**E07536XP3YAX280SMF3W**	**$30,248**	XD	1854	1.00	126	94.3	44.705	380-415/660-690//440-460	1;8;27
		1500//1800	280S/M	**E07518XP3YAX280SMF3W**	**$23,986**	XD	1852	1.00	130	94.4	44.705	380-415/660-690//440-460	1;8;27
		1000//1200	315S/M	**E07512XP3YAX315SMF3W**	**$31,133**	XD	1599	1.00	137	94.2	51.654	380-415/660-690//440-460	1;8;27
125	90	3000//3600	280S/M	**E09036XP3YAX280SMF3W**	**$36,063**	XD	1934	1.00	151	94.5	44.705	380-415/660-690//440-460	1;8;27
		1500//1800	280S/M	**E09018XP3YAX280SMF3W**	**$33,209**	XD	2060	1.00	154	94.7	44.705	380-415/660-690//440-460	1;8;27
		1000//1200	315S/M	**E09012XP3YAX315SMF3W**	**$40,124**	XD	2271	1.00	159	94.6	51.654	380-415/660-690//440-460	1;8;27
150	110	3000//3600	315S/M	**E11036XP3YAX315SMF3W**	**$42,763**	XD	2205	1.00	183	94.9	50.472	380-415/660-690//440-460	1;8;27
		1500//1800	315S/M	**E11018XP3YAX315SMF3W**	**$37,846**	XD	2426	1.00	192	95.0	51.654	380-415/660-690//440-460	1;8;27
		1000//1200	315S/M	**E11012XP3YAX315SMF3W**	**$48,658**	XD	2569	1.00	194	94.9	51.654	380-415/660-690//440-460	1;8;27
175	132	3000//3600	315S/M	**E13236XP3YAX315SMF3W**	**$54,064**	XD	2337	1.00	217	95.2	50.472	380-415/660-690//440-460	1;8;27
		1500//1800	315S/M	**E13218XP3YAX315SMF3W**	**$45,939**	XD	2624	1.00	224	95.2	51.654	380-415/660-690//440-460	1;8;27
		1000//1200	315S/M	**E13212XP3YAX315SMF3W**	**$82,346**	XD	3749	1.00	233	95.0	51.654	380-415/660-690//440-460	1;8;27
220	160	3000//3600	315S/M	**E16036XP3YAX315SMF3W**	**$67,306**	XD	2567	1.00	262	95.3	50.472	380-415/660-690//440-460	1;8;27
		1500//1800	315S/M	**E16018XP3YAX315SMF3W**	**$50,129**	XD	2668	1.00	271	95.4	51.654	380-415/660-690//440-460	1;8;27
		1000//1200	355M/L	**E16012XP3YAX355MLF3W**	**$90,159**	XD	3969	1.00	290	96.0	61.358	380-415/660-690//440-460	1;8;27
270	200	3000//3600	355M/L	**E20036XP3YAX355MLF3W**	**$100,962**	XD	4035	1.00	320	95.6	58.602	380-415/660-690//440-460	1;8;27
		1500//1800	355M/L	**E20018XP3YAX355MLF3W**	**$80,905**	XD	4006	1.00	346	95.6	61.358	380-415/660-690//440-460	1;8;27
		1000//1200	355M/L	**E20012XP3YAX355MLF3W**	**$110,130**	XD	4212	1.00	368	95.7	61.358	380-415/660-690//440-460	1;8;27
340	250	3000//3600	355M/L	**E25036XP3YAX355MLF3W**	**$111,375**	XD	4348	1.00	392	96.4	58.602	380-415/660-690//440-460	1;8;27
		1500//1800	355M/L	**E25018XP3YAX355MLF3W**	**$94,903**	XD	4236	1.00	432	95.8	61.358	380-415/660-690//440-460	1;8;27
		1000//1200	355M/L	**E25012XP3YAX355MLF3W**	**$133,308**	XD	4818	1.00	461	95.5	61.358	380-415/660-690//440-460	1;8;27
430	315	1500//1800	355M/L	**E31518XP3YAX355MLF3W**	**$108,540**	XD	4844	1.00	538	95.8	61.358	380-415/660-690//440-460	1;8;27

Please refer to back cover for description of "NOTES"

For detailed specifications, data sheets, drawings and performance curves visit http:// www.weg.net

Data subject to change without notice.

TEFC – Single-Phase – General Purpose – Foot Mount A-247
TEFC – Single-Phase – Auger Drive – Footless A-248
TEAO – Single-Phase – Poultry Fan – Foot Mount A-248
TEAO – Single-Phase – Poultry Fan – Resilient Base A-248
TEAO – Three-Phase – Grain Dryer/Vane Axial Fan A-249
TEAO – Single-Phase – Grain Dryer/Vane Axial Fan A-249
TEAO – Single-Phase – Aeration Fan A-249
TEAO – Three-Phase – Aeration Fan A-249
TEFC – Single-Phase – C-Face - Foot Mount - Irrigation Duty A-250
TEFC – Three-Phase – C-Face - Foot Mount - Irrigation Duty A-250
Irrigation Drive Motors A-251
Jet End Booster Pump Motors A-251

Farm Duty Motors

WEG offers a complete line of TEFC Farm Duty motors providing high starting torque for the most demanding applications. Standard features such as v-rings provide versatility for indoor and outdoor applications. Overload protection available in all frames protects the motor from extreme overloads and offers maximum safety to operators.

Rolled Steel

General Purpose - TEFC

- Double shielded ball bearings
- Insulation class F with class B temperature rise
- Start and run capacitor on 1.5 HP and up
- High starting Torque
- Manual Reset Thermal Overload Protector

Cast Iron

Auger Drive - TEFC

- Double shielded ball bearings
- Two bolts mounting NEMA ‘N’ flange
- Extended shaft (NDE) with wrench flat for manual jogging of auger
- Centrifugal start switch protected against auger drive overspeed
- Manual Reset Thermal Overload Protector

Auger Drive

Poultry Fan - TEAO

- Double shielded ball bearings
- Insulation class B
- Automatic Reset Thermal Overload Protector

Poultry Fan

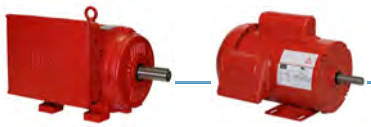

TEFC – Single-Phase – General Purpose – Foot Mount

HP	kW	RPM	Frame	Catalog Number	List Price	Mult. Symbol	Approx. Shipping Weight (lbs)	Service Factor	FL Amps @ High	FL. Eff (%)	"C" Dimension (in)	Voltage (V)	Notes
0.33	0.25	1800	W56	**.3318ES1RFDW56-S**	**$284**	R1	22	1.15	3.00	61.0	11.500	115/230	4;9
0.5	0.37	1800	W56	**.5018ES1RFDW56-S**	**$308**	R1	25	1.15	4.00	64.0	11.894	115/230	4;9
0.75	0.55	1800	56	**.7518ES1RFD56-S**	**$357**	R1	34	1.15	5.30	68.5	13.114	115/230	4;9
1	0.75	1800	56	**00118ES1RFD56-S**	**$394**	R1	40	1.15	6.80	71.0	13.902	115/230	4;9
		1800	143/5T	**00118ES1RFD143T-S**	**$400**	R1	40	1.15	6.80	71.0	13.969	115/230	4;9
1.5	1.1	1800	56H	**00158ES1RFD56H-S**	**$502**	R1	51	1.15	7.48	77.0	15.083	115/230	4;9
		1800	143/5T	**00158ES1RFD145T-S**	**$504**	R1	50	1.15	7.48	77.0	15.152	115/230	4;9
2	1.5	1800	56H	**00218ES1RFD56H-S**	**$529**	R1	56	1.15	10.0	78.5	15.870	115/230	4;9
		1800	143/5T	**00218ES1RFD145T-S**	**$578**	R1	57	1.15	10.0	78.5	15.938	115/230	4;9
		1800	W182/4T	**00218ES1RFD182T**	**$790**	R1	89	1.15	10.0	81.0	17.244	115/230	4;39
3	2.2	1800	W182/4T	**00318ES1DFD184T**	**$915**	R1	93	1.15	14.5	81.0	17.244	230	4;39
5	3.7	1800	184T	**00518ES1DFD184T**	**$1,074**	R1	119	1.15	21.4	79.0	17.050	230	4;39
		1800	W213/5T	**00518ES1DFD215T**	**$1,205**	R1	136	1.15	21.4	79.0	20.984	230	4;39
		1800	W213/5TZ	**00518ES1DFD215Z**	**$1,205**	R1	136	1.15	21.4	79.0	20.984	230	4;39
7.5	5.5	1800	215T	**00718ES1DFD215T**	**$1,463**	R1	168	1.15	33.0	83.0	19.567	230	4;39
		1800	215TZ	**00718ES1DFD215Z**	**$1,463**	R1	168	1.15	33.0	83.0	19.567	230	4;39
10	7.5	1800	215T	**01018ES1DFD215T**	**$1,692**	R1	193	1.15	40.0	83.0	19.567	230	4;39
12.5	9.2	1800	215T	**01218ES1E215T**	**$1,776**	W1	201	1.15	24.0	84.0	19.567	208-230/460	39

Please refer to back cover for description of "NOTES"

For detailed specifications, data sheets, drawings and performance curves visit http://www.weg.net

TEFC – Single-Phase – Auger Drive – Footless

HP	kW	RPM	Frame	Catalog Number	List Price	Mult. Symbol	Approx. Shipping Weight (lbs)	Service Factor	FL Amps @ High	FL. Eff (%)	"C" Dimension (in)	Voltage (V)	Notes
0.33	0.25	1800	56NZ	**.3318ES1RAD56NZ**	**$423**	A1	28	1.00	3.0	60.0	10.200	115/230	4;9;20;40
0.50	0.37	1800	56NZ	**.5018ES1RAD56NZ**	**$475**	A1	30	1.00	3.6	70.0	11.200	115/230	4;9;20;40
0.75	0.55	1800	56NZ	**.7518ES1RAD56NZ**	**$553**	A1	34	1.00	4.6	74.0	11.700	115/230	4;9;20;40
1	0.75	1800	56N	**00118ES1RAD56N**	**$683**	A1	35	1.00	7.0	74.0	12.480	115/230	4;9;20;40
1.5	1.1	1800	56N	**00158ES1RAD56N**	**$1,014**	A1	40	1.00	7.7	80.0	12.870	115/230	4;9;20;40

TEAO – Single-Phase – Poultry Fan – Foot Mount

HP	kW	RPM	Frame	Catalog Number	List Price	Mult. Symbol	Approx. Shipping Weight (lbs)	Service Factor	FL Amps @ High	FL. Eff (%)	"C" Dimension (in)	Voltage (V)	Notes
0.33	0.25	1800	48	**.3318ES1BPFC48**	**$311**	G1	23	1.25	3.00	64.0	10.748	115/208-230	3;9;16
0.5	0.37	1800	C56	**.5018ES1BPFC56**	**$336**	G1	26	1.25	4.20	65.0	11.102	115/208-230	3;9;16
0.75	0.55	1800	B56	**.7518ES1BPFB56**	**$414**	G1	31	1.25	5.60	70.0	11.102	115/208-230	3;9
1	0.75	1800	D56	**00118ES1BPFD56**	**$449**	G1	41	1.15	7.00	72.0	12.283	115/208-230	3;9

TEAO – Single-Phase – Poultry Fan – Resilient Base

HP	kW	RPM	Frame	Catalog Number	List Price	Mult. Symbol	Approx. Shipping Weight (lbs)	Service Factor	FL Amps @ High	FL. Eff (%)	"C" Dimension (in)	Voltage (V)	Notes
0.33	0.25	1800	48	**.3318ES1BRBPFC48**	**$325**	G1	27	1.25	3.00	64.0	11.339	115/208-230	3;9;13;16
0.5	0.37	1800	C56	**.5018ES1BRBPFC56**	**$350**	G1	29	1.25	4.20	65.0	11.732	115/208-230	3;9;13;16
0.75	0.55	1800	B56	**.7518ES1BRBPFB56**	**$433**	G1	35	1.25	5.60	70.0	11.811	115/208-230	3;9;13
1	0.75	1800	D56	**00118ES1BRBPFD56**	**$469**	G1	42	1.15	7.00	72.0	12.992	115/208-230	3;9;13

Please refer to back cover for description of "NOTES"

For detailed specifications, data sheets, drawings and performance curves visit http://www.weg.net

Data subject to change without notice.

TEAO – Three-Phase – Grain Dryer/Vane Axial Fan

HP	kW	RPM	Frame	Catalog Number	List Price	Mult. Symbol	Approx. Shipping Weight (lbs)	Service Factor	FL Amps @ High	FL. Eff (%)	"C" Dimension (in)	Voltage (V)	Notes
1.5-3	1.1-2.2	3600	143/5TZ	**00336AP3EGD145TZ-S**	**$750**	GD3	39	1.00	2.41	79.70	12.795	230/460	1;9;38
3-4.5	2.2-3.4	3600	143/5TZ	**00456AP3EGD145TZ-S**	**$795**	GD3	45	1.00	4.01	83.80	13.582	230/460	1;9;38
		3600	182/4Z	**00456AP3EGD182Z-S**	**$827**	GD3	59	1.00	4.27	86.20	14.601	230/460	1;9;38
5-7.5	3.7-5.5	3600	182/4TZ	**00736AP3EGD184TZ-S**	**$933**	GD3	77	1.00	6.45	87.80	16.338	230/460	1;9;38
7.5-10	5.5-7.5	3600	182/4TZ	**01036AP3EGD184TZ-S**	**$1,123**	GD3	91	1.00	9.04	89.80	17.913	230/460	1;9;38
10-15	7.5-11	3600	213/5TZ	**01536AP3EGD215TZ-S**	**$1,408**	GD3	147	1.00	12.20	92.50	17.912	230/460	1;9;38

TEAO - Single-Phase - Grain Dryer

HP	RPM	NEMA Frame	Catalog Number	List Price	Mult. Symbol	FL Amps @ High	FL. Eff. (%)	"C"Dim. (in)	Voltage (V)	Notes
1.5-3	3600	145TZ	**00336AP1DGD145TZ-S**	**$910**	GD1	7.51	73.20	13.555	230	1,9;38
3-4.5	3600	145TZ	**00456AP1DGD145TZ-S**	**$1,025**	GD1	11.80	82.40	15.130	230	1,9;38
5-7.5	3600	182TZ	**00736AP1DGD182TZ-S**	**$1,296**	GD1	19.80	82.90	17.070	230	1,9;38
7.5-10	3600	182TZ	**01036AP1DGD182TZ-S**	**$1,338**	GD1	27.20	87.80	17.858	230	1,9;38
10-15	3600	215TZ	**01536AP1DGD215TZ-S**	**$2,024**	GD1	37.80	88.00	19.720	230	1,9;38

TEAO – Single-Phase – Aeration Fan

HP	kW	RPM	Frame	Catalog Number	List Price	Mult. Symbol	Approx. Shipping Weight (lbs)	Service Factor	FL Amps @ High	FL. Eff (%)	"C" Dimension (in)	Voltage (V)	Notes
0.75	0.55	3600	56Z	**.7536AS1RAF56Z-S**	**$395**	R1	27	1.15	4.00	66.0	11.201	115/230	3;9;38
1	0.75	3600	56Z	**00136AS1RAF56Z-S**	**$459**	R1	31	1.15	5.10	70.0	11.594	115/230	3;9;38
1.5	1.1	3600	56Z	**00156AS1RAF56Z-S**	**$601**	R1	36	1.15	6.60	75.0	12.382	115/230	3;9;38
		3600	143/5TZ	**00156AS1RAF143TZ-S**	**$643**	R1	41	1.15	6.60	75.0	12.413	115/230	3;9;38
2	1.5	3600	143/5TZ	**00236AS1RAF143TZ-S**	**$783**	R1	46	1.15	8.70	77.0	12.807	115/230	3;9;38
3	2.2	3600	143/5TZ	**00336AS1RAF145TZ-S**	**$818**	R1	53	1.15	12.7	80.0	13.988	115/230	3;9;38

TEAO – Three-Phase – Aeration Fan

HP	kW	RPM	Frame	Catalog Number	List Price	Mult. Symbol	Approx. Shipping Weight (lbs)	Service Factor	FL Amps @ High	FL. Eff (%)	"C" Dimension (in)	Voltage (V)	Notes
0.75	0.55	3600	56Z	**.7536AS3EAF56Z-S**	**$402**	R1	23	1.25	1.13	72.0	10.380	208-230/460	9;38
1	0.75	3600	56Z	**00136AS3EAF56Z-S**	**$435**	R1	26	1.25	1.51	74.0	10.380	208-230/460	9;38
1.5	1.1	3600	143/5TZ	**00156AP3EAF143TZ-S**	**$498**	R1	33	1.15	1.90	82.5	11.624	230/460	9;38
2	1.5	3600	143/5TZ	**00236AP3EAF143TZ-S**	**$578**	R1	38	1.15	2.55	82.5	12.018	230/460	9;38
3	2.2	3600	143/5TZ	**00336AP3EAF145TZ-S**	**$659**	R1	45	1.15	3.55	85.5	12.805	230/460	9;38

Please refer to back cover for description of "NOTES"

For detailed specifications, data sheets, drawings and performance curves visit http://www.weg.net

IRRIGATION DUTY MOTORS

TEFC

High Starting Torque makes these motors ideal for a wide range of applications.

Feature that makes a difference:

- Constructed with Metal Fan

Standard Features:

- Shielded Ball bearings
- Class F insulation (impregnation resin and magnet wire are class H)
- Gasketed Conduit Box

TEFC – Single-Phase – C-Face – Foot Mount

HP	kW	RPM	Frame	Catalog Number	List Price	Mult. Symbol	Approx. Shipping Weight (lbs)	Service Factor	FL Amps @ High	FL. Eff (%)	"C" Dimension (in)	Voltage (V)	Notes
5	3.7	1800	184TC	**00518ES1EID184TC**	**$1,153**	W1	121	1.15	10.7	79.0	17.050	208-230/460	11
7.5	5.5	1800	215TC	**00718ES1EID215TC**	**$1,471**	W1	169	1.15	17.0	83.0	19.567	208-230/460	11
10	7.5	1800	215TC	**01018ES1EID215TC**	**$1,694**	W1	193	1.15	19.5	84.0	19.567	208-230/460	11
12.5	9.2	1800	215TC	**01218ES1EID215TC**	**$1,888**	W1	205	1.15	24.0	84.0	19.567	208-230/460	11

W22 - Cast Iron

Feature that makes a difference:

- Constructed with Metal Fan

Standard Features:

- 50/60 Hz rated (380V on nameplate - 400/415V available)
- Rated 50Hz at same horsepower 1.0 Service Factor
- Class F insulation (impregnation resin and magnet wire are class H)
- F1 mount (field convertible to F2)
- Regreasable ball bearings (frames 254T and up)
- Gasketed conduit box

TEFC – Three-Phase – C-Face – Foot Mount

HP	kW	RPM	Frame	Catalog Number	List Price	Mult. Symbol	Approx. Shipping Weight (lbs)	Service Factor	FL Amps @ High	FL. Eff (%)	"C" Dimension (in)	Voltage (V)	Notes
5	3.7	1800	182/4TC	**00518ET3EID184TC-W22**	**$860**	N1	110	1.25	6.45	89.5	15.860	230/460	11
7.5	5.5	1800	213/5TC	**00718ET3EID213TC-W22**	**$1,202**	N1	180	1.25	9.18	91.7	19.517	230/460	11
10	7.5	1800	213/5TC	**01018ET3EID215TC-W22**	**$1,386**	N1	194	1.25	12.4	91.7	19.517	230/460	11
15	11	1800	254/6TC	**01518ET3EID254TC-W22**	**$1,996**	N1	353	1.25	18.0	92.4	24.945	230/460	11
20	15	1800	254/6TC	**02018ET3EID256TC-W22**	**$2,349**	N1	403	1.25	24.1	93.0	24.945	230/460	11
25	18.5	1800	284/6TC	**02518ET3EID284TC-W22**	**$2,947**	N1	451	1.25	29.5	93.6	27.929	230/460	11

Please refer to back cover for description of "NOTES"

For detailed specifications, data sheets, drawings and performance curves visit http://www.weg.net

Data subject to change without notice.

IRRIGATION DUTY MOTORS

Irrigation Drive Motors

These drive motors for center pivot and linear travel irrigation towers have been used on OEM equipment for decades. Its unique design offers a stainless steel rain shield for extra protection against water and other elements typically present in an agricultural environment. These motors are rated for 50°C ambient, making it the best for this application. Also featuring double sealed ball bearings, an automatic reset thermal overload protector, corrosion resistant phosphate shaft coating and a gasketed conduit box.

HP	kW	RPM	Frame	Catalog Number	List Price	Mult. Symbol	Approx. Shipping Weight (lbs)	Service Factor	FL Amps @ High	FL. Eff (%)	"C" Dimension (in)	Voltage (V)	Notes
1	.75	1800	56C	1311731426	$803	A1	31	1.00	1.40	85.5	14.580	460	3;9;15;42;45
1.5	1.1	1800	56C	1312200400	$879	A1	38	1.00	2.00	86.5	14.580	460	3;9;15;42;45

Jet End Booster Pump Motor

The Jet End Booster Pump Motor is perfect for irrigation systems. The solution includes a stainless steel rain shield and canopy for vertical application, a fully gasketed conduit box, an automatic reset thermal overload protection, and stainless steel shaft end.

HP	kW	RPM	Frame	Catalog Number	List Price	Mult. Symbol	Approx. Shipping Weight (lbs)	Service Factor	FL Amps @ High	FL. Eff (%)	"C" Dimension (in)	Voltage (V)	Notes
2	1.5	3600	56J	1313171403	$837	A1	43	1.50	2.80	85.5	14.220	460	3;9;15
2	1.5	3600	56CZ	1313007404	$851	A1	43	1.50	2.80	85.5	14.490	460	3;9;15;46

Please refer to back cover for description of "NOTES"

For detailed specifications, data sheets, drawings and performance curves visit http://www.weg.net

VECTOR DUTY MOTORS

TENV – Three-Phase – Foot Mount – Double C-Face A-253

OIL WELL PUMPING – ODP & TEFC

TEFC – Three-Phase – NEMA Design ‘D’ A-256
ODP - Three-Phase - NEMA Design ‘D’ A-256

COMPRESSOR DUTY MOTORS

ODP – Single-Phase – Foot Mount A-258
ODP – Three-Phase – Foot Mount – NEMA Premium® A-259

HYDRAULIC PUMP MOTORS

TEFC – Three-Phase – SAE-A – High Efficiency A-260

BRAKE MOTORS

TEFC – Foot Mount - Cast Iron A-262
TEFC – C-Face – Foot Mount - Cast Iron A-263
TEFC – Foot Mount - Rolled Steel A-264
TEFC – C-Face – Foot Mount - Rolled Steel. A-265
TEFC – C-Face – Footless - Rolled Steel A-265

SAW ARBOR MOTORS

TEFC – Three-Phase – Right-Hand Thread A-266
TEFC – Three-Phase – Left-Hand Thread A-266

SOOT BLOWER MOTORS

TEFC – C-Face – Footless A-267

Definite Purpose Motors

VECTOR DUTY MOTORS

TENV - Three-Phase - Foot Mount - Double C-Face

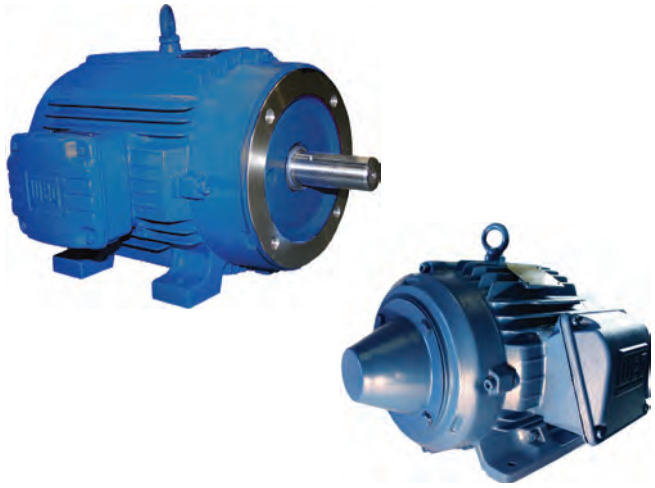

Designed specifically for inverter operation for applications requiring 1000:1 constant torque turndown ratio

- Class F insulation (Impregnation Resin and Magnet wire are class H)
- NEMA design B
- F1 Mounted (F2 convertible)
- Stainless Steel Nameplate - Laser etched with high contrast background
- Gasketed conduit box

ADDITIONAL TECHNICAL DATA

CONTACT WEG OR VISIT WWW.WEG.NET

Features that make a difference:

- Constant torque operation from 0 to base speed (1000:1) on PWM Vector Drive
- Constant Horsepower operation up to 150% base speed
- Ready for encoder mount
- With thermostats (1 per phase)
- Special nameplate data for easy drive set-up
- Ready for C-face brake, limited to 10 lb-ft braking torque

Inverter Rated:
1000 : 1 for constant torque

TENV – Three-Phase – Foot Mount – Double C-Face

HP	kW	RPM	Frame	Catalog Number	List Price	Mult. Symbol	Approx. Shipping Weight (lbs)	Service Factor	FL Amps @ High	FL. Eff (%)	"C" Dimension (in)	Voltage (V)	Notes
1	0.75	1800	143/5TC	00118NT3FVD143TC-W22	$697	D1	51	1.00	1.41	85.5	14.678	230/460	17;19
1.5	1.1	1800	143/5TC	00158NT3FVD145TC-W22	$705	D1	60	1.00	2.00	86.5	14.678	230/460	17;19
2	1.5	1800	143/5TC	00218NT3FVD145TC-W22	$928	D1	62	1.00	2.65	86.5	14.678	230/460	17;19
3	2.2	1800	182/4TC	00318NT3FVD182TC-W22	$1,150	D1	107	1.00	3.91	89.5	16.569	230/460	17;19
5	3.7	1800	182/4TC	00518NT3FVD184TC-W22	$1,373	D1	116	1.00	7.11	89.5	16.569	230/460	17;19;37
7.5	5.5	1800	213/5TC	00718NT3FVD213TC-W22	$1,803	D1	173	1.00	9.07	91.7	20.041	230/460	17;19
10	7.5	1800	213/5TC	01018NT3FVD215TC-W22	$2,157	D1	207	1.00	13.3	91.7	20.041	230/460	17;19;37
15	11	1800	254/6TC	01518NT3FVD254TC-W22	$2,567	D1	365	1.00	19.4	92.4	25.569	230/460	17;19
20	15	1800	254/6TC	02018NT3FVD256TC-W22	$3,747	D1	398	1.00	26.6	93.0	25.569	230/460	17;19;37

Please refer to back cover for description of "NOTES"

For detailed specifications, data sheets, drawings and performance curves visit http://www.weg.net

Data subject to change without notice.

System Drive VFD AC Motors

1HP – 1500HP TEFC

The WEG Systems Drive VFD AC motor raises the bar for customers who demand the best. Benefits such as very high overload and expanded speed range capabilities increase the value of the product for many variable speed applications.

The designs are based on the W22 and H-Line Severe Duty motor platforms for outstanding reliability.

What makes this a Systems Drive Motor

- Constant torque capability to zero speed in standard NEMA frame size TEFC motor
- High torque designs for wide constant HP capability
- High short term overload capacities can exceed 200%
- 3 NC thermostats on winding
- Drive end shaft grounding available (standard 447T and larger)
- Insulated opposite drive end bearings available (standard 447T and larger)
- Very low noise
- Class I and Class II Division 2 up to 20:1CT to 449T frame (certification on larger ratings upon request)
- VFD rated insulation system exceeds requirements of NEMA MG1 Part 31 standard
- Custom designs for non-standard base speeds/frequencies (i.e. 600RPM base speed with 6-pole design) to replace many DC motor applications without gearing change

Features:

- 1000:1 Constant Torque
- Powerful
- Reliable
- Flexible

What makes this a WEG Motor

- Rugged FC200 high strength cast iron construction
- Paint system exceeds 200 hour salt spray test per ASTM B117
- PPLS – Positive Pressure Lubrication System
- All Silicon C4 coated lamination steel for reliability and repairability* – withstands burnout temperatures of 500C(935F) without loss of insulating properties. This allows the motor to be rewound back to the original efficiency
- Class F insulation system with mostly Class H components for long life
- Stainless steel nameplate

Please contact your authorized WEG distributor or go to www.**weg.net** for further information or additional specifications. **1-800-ASK-4WEG**

Please refer to back cover for description of "NOTES"

For detailed specifications, data sheets, drawings and performance curves visit http://www.weg.net

Data subject to change without notice.

Three-Phase General Purpose Motors

OIL WELL PUMPING
TEFC & ODP

These special motors have the high slip and high torque that oil well beam pumping units demand.

Standard Features:

- Regreasable Bearings (Frames 254T and up)
- NEMA design D (5-8% slip)
- Class F insulation (Impregnation Resin and magnet Wire are class H)
- F2 Mounted (Cast Iron frames are F1 convertible).
- Stainless Steel Nameplate - Laser etched with High contrast background (Cast Iron Frames only)
- Gasketed conduit box (TEFC only)
- Class I, Div. 2, Groups A, B, C & D – T3, Class II, Div 2, Groups F & G – T3C (TEFC Frames only)

TEFC

ODP

Features that make a difference:

- Rodent screen (ODP Frames 254T and up)
- High starting and breakdown torque (NEMA Design D)
- Roller bearings for frames 404T and up

ADDITIONAL TECHNICAL DATA

CONTACT WEG OR VISIT WWW.WEG.NET

Definite Purpose Motors

OIL WELL PUMPING

TEFC – Three-Phase – NEMA Design 'D'

HP	kW	RPM	Frame	Catalog Number	List Price	Mult. Symbol	Approx. Shipping Weight (lbs)	Service Factor	FL Amps @ High	FL. Eff (%)	"C" Dimension (in)	Voltage (V)	Notes
3	2.2	1200	213/5T	**00312ES3E0W215T-W22**	**$1,027**	P1E	147	1.15	4.98	74.0	19.517	208-230/460	7
5	3.7	1200	213/5T	**00512ES3E0W215T-W22**	**$1,170**	P1E	185	1.15	7.73	77.0	19.517	208-230/460	7
		900	254/6T	**00509ES3E0W256T-W22**	**$2,242**	P1E	301	1.15	7.27	77.0	24.945	208-230/460	7
7.5	5.5	1200	254/6T	**00712ES3E0W254T-W22**	**$1,688**	P1E	289	1.15	9.40	82.5	24.945	208-230/460	7
10	7.5	1200	254/6T	**01012ES3E0W256T-W22**	**$2,070**	P1E	346	1.15	12.7	82.5	24.945	208-230/460	7
		900	284/6T	**01009ES3E0W286T-W22**	**$3,437**	P1E	400	1.15	13.7	82.5	27.929	208-230/460	7
15	11	1200	284/6T	**01512ES3E0W284T-W22**	**$2,679**	P1E	447	1.15	18.3	85.5	27.929	208-230/460	7
		900	324/6T	**01509ES3E0W324T-W22**	**$4,293**	P1E	577	1.15	21.8	85.5	31.116	208-230/460	7
20	15	1200	284/6T	**02012ES3E0W286T-W22**	**$3,162**	P1E	488	1.15	24.2	86.5	27.929	208-230/460	7
		900	324/6T	**02009ES3E0W326T-W22**	**$4,872**	P1E	629	1.15	29.8	85.5	31.116	208-230/460	7
25	18.5	1200	324/6T	**02512ES3E0W324T-W22**	**$3,887**	P1E	598	1.15	31.2	88.5	31.116	208-230/460	7
30	22	1200	324/6T	**03012ES3E0W326T-W22**	**$4,515**	P1E	632	1.15	37.1	88.5	31.116	208-230/460	7
40	30	1200	364/5T	**04012ES3E0W365T-W22**	**$6,290**	P1E	1002	1.15	48.9	87.5	34.251	208-230/460	7
50	37	1200	404/5T	**05012ES3E0W404T-W22**	**$8,172**	P1E	1299	1.15	59.2	88.1	39.730	208-230/460	7;14
60	45	1200	404/5T	**06012ES3E0W405T-W22**	**$9,414**	P1E	1252	1.15	71.3	89.0	39.730	208-230/460	7;14
75	55	1200	444/5T	**07512ES3E0W444T-W22**	**$14,976**	P1E	1856	1.15	91.8	89.5	44.950	208-230/460	7;14
100	75	1200	444/5T	**10012ES3E0W445T-W22**	**$18,074**	P1E	2222	1.15	121	90.2	44.950	208-230/460	7;14

ODP – Three-Phase – NEMA Design 'D'

HP	kW	RPM	Frame	Catalog Number	List Price	Mult. Symbol	Approx. Shipping Weight (lbs)	Service Factor	FL Amps @ High	FL. Eff (%)	"C" Dimension (in)	Voltage (V)	Notes
1.5	1.1	1200	184T	**00152OS3E0W184T**	**$777**	P1E	71	1.00	2.66	71.0	14.291	208-230/460	1;7;9
2	1.5	1200	184T	**00212OS3E0W184T**	**$793**	P1E	72	1.00	3.36	81.3	14.291	208-230/460	1;7;9
3	2.2	1200	213T	**00312OS3E0W213T**	**$866**	P1E	109	1.00	4.69	80.7	17.165	208-230/460	1;7;9
5	3.7	1200	215T	**00512OS3E0W215T**	**$989**	P1E	128	1.00	7.15	85.5	17.165	208-230/460	1;7;9
7.5	5.5	1200	254T	**00712OS3E0W254T**	**$1,434**	P1E	185	1.00	9.63	81.5	20.669	208-230/460	1;7
10	7.5	1200	256T	**01012OS3E0W256T**	**$1,796**	P1E	297	1.00	13.5	83.0	22.401	208-230/460	1;7
15	11	1200	284T	**01512OS3E0W284T**	**$2,441**	P1E	355	1.00	18.1	86.5	23.386	208-230/460	1;7
25	18.5	1200	324T	**02512OS3E0W324T**	**$3,247**	P1E	503	1.00	33.6	86.5	26.181	208-230/460	1;7
30	22	1200	326T	**03012OS3E0W326T**	**$3,848**	P1E	550	1.00	39.0	88.5	27.667	208-230/460	1;7
40	30	1200	364/5T	**04012OS3E0W365T**	**$5,277**	P1E	860	1.00	51.3	88.5	29.764	208-230/460	1;7
50	37	1200	404/5T	**05012OS3E0W405T**	**$6,834**	P1E	1019	1.00	61.7	88.5	34.133	208-230/460	1;7;14
60	45	1200	404/5T	**06012OS3E0W405T**	**$7,495**	P1E	1039	1.00	75.1	88.5	34.133	208-230/460	1;7;14
75	55	1200	444/5T	**07512OS3E0W445T**	**$12,308**	P1E	1458	1.00	96.4	89.5	39.803	208-230/460	1;7;14
100	75	1200	444/5T	**10012OS3E0W445T**	**$13,078**	P1E	1691	1.00	127	90.2	39.803	208-230/460	1;7;14

Please refer to back cover for description of "NOTES"

For detailed specifications, data sheets, drawings and performance curves visit http:// www.weg.net

Data subject to change without notice.

Definite Purpose Motors

COMPRESSOR DUTY MOTORS

ODP - Foot Mount

These high quality motors are designed to meet the high torque requirements of air compressor loads. Special electrical and mechanical design guarantees reliable service and longer motor life.

Single Phase

Single-Phase

- Class B insulation
- Start Capacitor
- Ball bearings
- Manual Reset Thermal Overload Protection
- High starting torque
- Rolled Steel frames have the base seam-welded to the frame for heavy duty use

Three Phase

Three-Phase

- Class F insulation (Impregnation Resin and Magnet wire are class H)
- Class B Rise at 1.15 Service Factor
- F1 Mounted (Cast Iron Frame motors are F2 convertible)
- Stainless Steel Nameplate - Laser etched with high contrast background (Cast Iron Frames only)
- Cast Iron Frames: Regreasable ball bearings
- Rolled Steel Frames: Permanently Lubricated ZZ ball bearings

ADDITIONAL TECHNICAL DATA

ELECTRICAL DATA: B-9; B-16
MECHANICAL DATA: B-74; B-75

Definite Purpose Motors

COMPRESSOR DUTY MOTORS

ODP – Single-Phase – Foot Mount

HP	kW	RPM	Frame	Catalog Number	List Price	Mult. Symbol	Approx. Shipping Weight (lbs)	Service Factor	FL Amps @ High	FL. Eff (%)	"C" Dimension (in)	Voltage (V)	Notes
0.5	0.37	3600	W56	**.50360S1BCDW56-S**	**$224**	C1S	28	1.00	3.10	63.0	9.866	115/208-230	1;4;6;9
0.75	0.55	3600	W56	**.75360S1BCDW56-S**	**$237**	C1S	22	1.00	4.30	68.5	10.260	115/208-230	1;4;6;9
1	0.75	3600	56	**001360S1BCD56-S**	**$278**	C1S	36	1.00	6.60	67.0	11.102	115/208-230	1;4;6;9
1.5	1.1	3600	56	**001560S1BCD56-S**	**$311**	C1S	40	1.00	8.70	68.0	11.496	115/208-230	1;4;6;9
2	1.5	3600	56H	**002360S1BCD56-S**	**$372**	C1S	34	1.00	8.90	70.0	11.890	115/208-230	1;4;6;9
3	2.2	3600	56H	**003360S1CCD56-S**	**$432**	C1S	41	1.00	12.7	80.0	12.677	208-230	1;4;6;9
		1800	184T	**003180S1CCDOL184T**	**$687**	C1	99	1.15	17.5	75.0	14.875	208-230	4;6
5	3.7	3600	56H	**005360S1DCD56H-S**	**$458**	C1S	53	1.00	20.3	80.0	13.465	230	1;4;6;9
		3600	56HZ	**005360S1DCD56HZ-S**	**$481**	C1S	53	1.00	20.3	80.0	13.533	230	1;4;5;6;9
		3600	W182/4Y	**005360S1CCDW184Y-S**	**$526**	C1S	56	1.00	20.7	80.0	15.152	208-230	1;4;5;6;9
		1800	184T	**005180S1CCDOL184T**	**$721**	C1	101	1.15	21.5	82.5	14.875	208-230	4;6
		1800	184T	**005180S1CCD184T**	**$682**	C1	102	1.25	21.5	82.5	14.875	208-230	6;10
7.5	5.5	1800	215T	**007180S1CCD215T**	**$961**	C1	129	1.15	31.3	84.5	19.660	208-230	5;6;9;28
10	7.5	1800	215T	**010180S1CCD215T**	**$1,468**	C1	162	1.15	43.0	85.0	21.235	208-230	5;6;9;28

Please refer to back cover for description of "NOTES"

For detailed specifications, data sheets, drawings and performance curves visit http:// www.weg.net

Data subject to change without notice.

ODP – Three-Phase – Foot Mount

HP	kW	RPM	Frame	Catalog Number	List Price	Mult. Symbol	Approx. Shipping Weight (lbs)	Service Factor	FL Amps @ High	FL. Eff (%)	"C" Dimension (in)	Voltage (V)	Notes
1	0.75	1800	143/5T	001180T3E143T-S	$390	N1S	38	1.15	1.50	85.5	11.181	230/460	9
		1800	143/5T	001180T3ECD143T-S	$398	N1S	38	1.15	1.50	85.5	11.181	230/460	6;9
		1800	143/5T	001180T3P143T-S	$390	N1S	38	1.15	3.50	85.5	11.181	200	9
1.5	1.1	3600	143/5T	001560T3E143T-S	$442	N1S	33	1.15	1.90	84.0	11.181	230/460	9
		1800	143/5T	001580T3E145T-S	$449	N1S	45	1.15	2.10	86.5	12.362	230/460	9
		1800	143/5T	001580T3ECD145T-S	$458	N1S	45	1.15	2.10	86.5	12.362	230/460	6;9
		1800	143/5T	001580T3P145T-S	$449	N1S	45	1.15	4.80	86.5	12.362	200	9
2	1.5	3600	143/5T	002360T3E145T-S	$487	N1S	40	1.15	2.40	85.5	11.969	230/460	9
		1800	143/5T	002180T3E145T-S	$492	N1S	43	1.15	2.70	86.5	12.362	230/460	9
		1800	143/5T	002180T3ECD145T-S	$502	N1S	43	1.15	2.70	86.5	12.362	230/460	6;9
		1800	143/5T	002180T3P145T-S	$492	N1S	43	1.15	6.20	86.5	12.362	200	9
3	2.2	3600	143/5T	003360T3E145T-S	$545	N1S	43	1.15	3.60	85.5	12.362	230/460	9
		1800	182/4T	003180T3E182T-S	$524	N1S	73	1.15	3.90	89.5	15.157	230/460	9
		1800	182/4T	003180T3P182T-S	$524	N1S	73	1.15	8.90	89.5	15.157	200	9
5	3.7	3600	56H	005360S3ECD56-S	$412	C1S	41	1.00	6.40	74.8	12.675	208-230/460	1;6;9;29
		3600	182/4T	005360T3E182T-S	$651	N1S	61	1.15	6.10	86.5	14.764	230/460	9
		1800	182/4T	005180T3E184T-S	$630	N1S	88	1.15	6.30	89.5	16.339	230/460	9
		1800	182/4T	005180T3P184T-S	$630	N1S	88	1.15	14.6	89.5	16.339	200	9
7.5	5.5	3600	182/4T	007360T3E184T-S	$920	N1S	76	1.15	8.70	88.5	15.157	230/460	9
		1800	213/5T	007180T3E213T-S	$910	N1S	125	1.15	9.30	91.0	16.575	230/460	9
		1800	213/5T	007180T3P213T-S	$910	N1S	125	1.15	21.3	91.0	16.575	200	9
10	7.5	3600	213/5T	010360T3E213T-S	$1,081	N1S	126	1.15	12.0	89.5	16.969	230/460	9
		1800	213/5T	010180T3E215T-S	$1,102	N1S	130	1.15	12.4	91.7	16.575	230/460	9
		1800	213/5T	010180T3P215T-S	$1,102	N1S	130	1.15	28.5	91.7	16.575	200	9
15	11	1800	254/6T	015180T3E254T-S	$1,477	N1S	211	1.15	18.6	93.0	20.472	230/460	9
		1800	254/6T	015180T3H254T-S	$1,477	N1S	211	1.15	14.9	93.0	20.472	575	9
		1800	254/6T	015180T3P254T-S	$1,477	N1S	211	1.15	42.8	93.0	20.472	200	9
		1800	254T	015180T3ECD254T	$1,507	N1B	265	1.15	18.4	91.0	20.669	230/460	6
		1800	254T	015180T3HCD254T	$1,507	N1B	264	1.15	14.9	91.0	20.669	575	6
		1800	254T	015180T3PCD254T	$1,507	N1B	264	1.15	42.8	91.0	20.669	200	6
20	15	3600	254/6T	020360T3E254T-S	$1,760	N1S	187	1.15	23.8	91.0	20.472	230/460	9
		3600	254T	020360T3ECD254T	$1,795	N1B	222	1.15	24.6	91.0	20.669	230/460	6
		1800	254/6T	020180T3E256T-S	$1,832	N1S	235	1.15	25.0	93.0	20.472	230/460	9
		1800	256T	020180T3ECD256T	$1,869	N1B	301	1.15	25.0	93.0	22.401	230/460	6
25	18.5	3600	254/6T	025360T3E256T-S	$2,139	N1S	202	1.15	29.1	91.7	20.472	230/460	9
		3600	254T	025360T3ECD256T	$2,182	N1B	259	1.15	29.8	91.7	22.401	230/460	6

Please refer to back cover for description of "NOTES"

For detailed specifications, data sheets, drawings and performance curves visit http://www.weg.net

HYDRAULIC PUMP MOTORS

TEFC – Three-Phase – SAE-A – High Efficiency

Heavy duty cast iron enclosure designed for intermittent duty. Typical applications are hydraulic pumps for trash compactors, car lifts and others.

- Class F insulation (Impregnation Resin and magnet Wire are class H)
- F3 mount
- 8-hole SAE-A flange for different angle pump mounting
- Shaft with 3/4” bore (female shaft)

Features that make a difference

- NPT Threaded terminal box
- Cast Iron frame
- Totally Enclosed IP55 rated

TEFC – Three-Phase – SAE-A – High Efficiency

HP	kW	RPM	Frame	Catalog Number	List Price	Mult. Symbol	Approx. Shipping Weight (lbs)	Service Factor	FL Amps @ High	FL. Eff (%)	“C” Dimension (in)	Voltage (V)	Notes
5	3.7	1800	184TYZ	**00518EP3EHP184TYZ7F3**	**$819**	W1	99	1.15	7.37	87.5	12.800	208-230/460	8;30;37
7.5	5.5	1800	213TYZ	**00718EP3EHP213TYZ7F3**	**$1,054**	W1	172	1.15	10.9	89.5	14.816	208-230/460	8;30;37
10	7.5	1800	215TYZ	**01018EP3EHP215TYZ7F3**	**$1,244**	W1	189	1.15	15.7	89.5	16.312	208-230/460	8;30;37

Please refer to back cover for description of “NOTES”

For detailed specifications, data sheets, drawings and performance curves visit http:// www.weg.net

Data subject to change without notice.

BRAKE MOTORS

TEFC - Three-Phase - NEMA Premium®

WEG W22 brake motors consist of an induction motor coupled to a disc brake. Brake is of sturdy construction with few moving parts which guarantees long durability and minimum maintenance.

Standard Features:

- Class F insulation (Impregnation Resin and Magnet wire are class H)
- F1 Mounted
- Stainless Steel Nameplate - Laser etched with high contrast background
- Regreasable ball bearings (Frames 254T and up)
- 60HZ - 50HZ available with custom build

Note 1: If separate power supply to the Brake is required, (Such as on Motors operating with Variable Frequency Drive); 230V to the Brake module is mandatory, unless motor model contains "Q" (ex. 00118EP3EBMQ143T). For "Q" models, the input voltage to the Brake module is 460V AC.
Available as stock mod.

Features that make a difference:

- 1.25 Service Factor
- NPT Threaded terminal box
- Armature type brake
- Manual Release

Inverter Rated: [1]
1000:1 for variable torque
20:1 for constant torque

Brake Torques			
Frame	N.m	lb.ft	Optional lb.ft
143/5T	16	12	17
182/4T	60	44	N/A
213/5T	125	59	92
254/6T	235	111	173
284/6T	400	192	254

Please refer to back cover for description of "NOTES"

For detailed specifications, data sheets, drawings and performance curves visit http://www.weg.net

Definite Purpose Motors

BRAKE MOTORS

TEFC – Foot Mount

HP	kW	RPM	Frame	Catalog Number	List Price	Mult. Symbol	Approx. Shipping Weight (lbs)	Service Factor	FL Amps @ High	FL. Eff (%)	"C" Dimension (in)	Voltage (V)	Notes
1	0.75	1800	143/5T	00118ET3EBM143T-W22	$1,494	B1	59	1.25	1.47	85.5	16.231	230/460	25
		1800	143/5T	00118ET3EBMQ143T-W22	$1,654	B1	59	1.25	1.47	85.5	16.231	230/460	24;26
		1800	143/5T	00118ET3HBM143T-W22	$1,494	B1	62	1.25	1.18	85.5	16.231	575	25
		1200	143/5T	00112ET3EBM145T-W22	$1,587	B1	66	1.25	1.73	82.5	16.231	230/460	25
		900	182/4T	00109ET3EBM182T-W22	$2,594	B1	126	1.25	2.30	78.5	19.314	230/460	25
1.5	1.1	3600	143/5T	00156ET3EBM143T-W22	$1,501	B1	73	1.25	1.96	84.0	16.231	230/460	25
		1800	143/5T	00158ET3EBM145T-W22	$1,569	B1	65	1.25	2.02	86.5	16.231	230/460	25
		1800	143/5T	00158ET3EBMQ145T-W22	$1,729	B1	70	1.25	2.02	86.5	16.231	230/460	24;26
		1200	182/4T	00152ET3EBM182T-W22	$2,264	B1	117	1.25	2.54	87.5	19.314	230/460	25
		900	182/4T	00159ET3EBM184T-W22	$2,703	B1	156	1.25	2.70	82.5	19.314	230/460	25
2	1.5	3600	143/5T	00236ET3EBM145T-W22	$1,501	B1	62	1.25	2.56	85.5	16.231	230/460	25
		1800	143/5T	00218ET3EBM145T-W22	$1,594	B1	66	1.25	2.76	86.5	16.231	230/460	25
		1800	143/5T	00218ET3EBMQ145T-W22	$1,754	B1	72	1.25	2.76	86.5	16.231	230/460	24;26
		1200	182/4T	00212ET3EBM184T-W22	$2,369	B1	122	1.25	3.23	88.5	19.314	230/460	25
		900	213/5T	00209ET3EBM213T-W22	$3,345	B1	217	1.25	3.39	85.5	23.188	230/460	25
3	2.2	3600	182/4T	00336ET3EBM182T-W22	$2,290	B1	140	1.25	3.63	86.5	19.314	230/460	25
		1800	182/4T	00318ET3EBM182T-W22	$2,052	B1	115	1.25	3.91	89.5	19.314	230/460	25
		1800	182/4T	00318ET3EBMQ182T-W22	$2,212	B1	130	1.25	3.91	89.5	19.314	230/460	24;26
		1200	213/5T	00312ET3EBM213T-W22	$3,220	B1	196	1.25	4.41	89.5	23.188	230/460	25
		900	213/5T	00309ET3EBM215T-W22	$3,740	B1	259	1.25	4.55	85.5	23.188	230/460	25
5	3.7	3600	182/4T	00536ET3EBM184T-W22	$2,343	B1	126	1.25	5.90	88.5	19.314	230/460	25
		1800	182/4T	00518ET3EBM184T-W22	$2,291	B1	124	1.25	6.45	89.5	19.314	230/460	25
		1800	182/4T	00518ET3EBMQ184T-W22	$2,451	B1	136	1.25	6.45	89.5	19.314	230/460	24;26
		1800	182/4T	00518ET3HBM184T-W22	$2,291	B1	124	1.25	5.16	89.5	19.314	575	25
		1200	213/5T	00512ET3EBM215T-W22	$3,406	B1	213	1.25	6.83	89.5	23.188	230/460	25
		900	254/6T	00509ET3EBM254T-W22	$5,641	B1	358	1.25	7.58	87.5	29.839	230/460	25
		900	254/6T	00509ET3EBMQ254T-W22	$5,801	B1	354	1.25	7.58	87.5	29.839	230/460	24;26
7.5	5.5	3600	213/5T	00736ET3EBM213T-W22	$3,002	B1	200	1.25	8.76	89.5	23.188	230/460	25
		1800	213/5T	00718ET3EBM213T-W22	$2,903	B1	215	1.25	9.18	91.7	23.188	230/460	25
		1200	254/6T	00712ET3EBM254T-W22	$5,172	B1	377	1.25	9.48	91.0	29.839	230/460	25
		900	254/6T	00709ET3EBM256T-W22	$6,415	B1	377	1.25	11.1	87.5	29.839	230/460	25
10	7.5	3600	213/5T	01036ET3EBM215T-W22	$3,492	B1	238	1.25	11.6	90.2	23.188	230/460	25
		1800	213/5T	01018ET3EBM215T-W22	$3,474	B1	221	1.25	12.4	91.7	23.188	230/460	25
		1800	213/5T	01018ET3HBM215T-W22	$3,474	B1	200	1.25	9.92	91.7	23.188	575	25
		1200	254/6T	01012ET3EBM256T-W22	$5,759	B1	367	1.25	12.9	91.0	29.839	230/460	25
15	11	3600	254/6T	01536ET3EBM254T-W22	$4,745	B1	384	1.25	17.2	91.0	29.839	230/460	25
		1800	254/6T	01518ET3EBM254T-W22	$5,205	B1	407	1.25	18.0	92.4	29.839	230/460	25
		1800	254/6T	01518ET3EBMQ254T-W22	$5,365	B1	407	1.25	18.0	92.4	29.839	230/460	24;26
		1800	254/6T	01518ET3HBM254T-W22	$5,205	B1	369	1.25	14.4	92.4	29.839	575	25
20	15	3600	254/6T	02036ET3EBM256T-W22	$5,768	B1	424	1.25	23.2	91.0	29.839	230/460	25
		1800	254/6T	02018ET3EBM256T-W22	$5,771	B1	456	1.25	24.1	93.0	29.839	230/460	25
25	18.5	1800	284/6T	02518ET3EBM284T-W22	$6,796	B1	520	1.25	29.5	93.6	32.976	230/460	25
30	22	1800	284/6T	03018ET3EBM286T-W22	$7,276	B1	558	1.25	35.1	93.6	32.976	230/460	25

Please refer to back cover for description of "NOTES"

For detailed specifications, data sheets, drawings and performance curves visit http:// www.weg.net

Data subject to change without notice.

TEFC – C-Face – Foot Mount

HP	kW	RPM	Frame	Catalog Number	List Price	Mult. Symbol	Approx. Shipping Weight (lbs)	Service Factor	FL Amps @ High	FL. Eff (%)	"C" Dimension (in)	Voltage (V)	Notes
1	0.75	1800	143/5TC	00118ET3EBMQ143TC-W2	**$1,682**	B1	61	1.25	1.47	85.5	16.231	230/460	24;26
1.5	1.1	1800	143/5TC	00158ET3EBMQ145TC-W2	**$1,757**	B1	70	1.25	2.02	86.5	16.231	230/460	24;26
2	1.5	1800	143/5TC	00218ET3EBMQ145TC-W2	**$1,782**	B1	72	1.25	2.76	86.5	16.231	230/460	24;26
3	2.2	1800	182/4TC	00318ET3EBMQ182TC-W2	**$2,250**	B1	119	1.25	3.91	89.5	19.314	230/460	24;26
5	3.7	1800	182/4TC	00518ET3EBMQ184TC-W2	**$2,489**	B1	136	1.25	6.45	89.5	19.314	230/460	24;26

Please refer to back cover for description of "NOTES"

For detailed specifications, data sheets, drawings and performance curves visit http:// www.weg.net

BRAKE MOTORS

Spring-Set brake (Solenoid Actuated)

Features:

- 1.15 Service Factor
- Manual Release Lever
- AC brake
- Inverter Rated
- IP55 Enclosure
- Dual Frequency (50/60 Hz)

Applications:

- Conveyors
- Door Operators
- Packaging Equipment
- Unit Handling

TEFC - Foot Mount

HP	kW	RPM	Frame	atalog Number	List Prie	Mult Symbol	Approx. Shipping Weight (lbs)	Brake Torque (ft.lb)	FL. Amps @ High	FL. Eff (%)	"C" Dimension (in)	Volts	Notes
0.25	0.18	1800	W56	.2518ES3EBMW56-S	$928	RSB	24	3	0.50	66.0	14.610	208-230/460	9
0.33	0.25	1800	W56	.3318ES3EBMW56-S	$977	RSB	26	3	0.66	68.0	14.610	208-230/460	9
0.5	0.37	1800	W56	.5018ES3EBMW56-S	$1,105	RSB	27	3	1.00	72.0	15.004	208-230/460	9
0.75	0.55	1800	W56	.7518ES3EBMW56-S	$1,301	RSB	38	6	1.22	75.5	15.397	208-230/460	9
1	0.75	1800	56	00118ET3EBM56-S	$1,504	RSB	54	6	1.47	85.5	17.835	230/460	9
		1800	143T	00118ET3EBM143T-S	$1,729	RSB	55	6	1.47	85.5	17.914	230/460	9
1.5	1.1	1800	145T	00158ET3EBM145T-S	$1,866	RSB	56	10	2.02	86.5	17.914	230/460	9
2	1.5	1800	145T	00218ET3EBM145T-S	$1,921	RSB	60	10	2.72	86.5	18.307	230/460	9
3	2.2	1800	182T	00318ET3EBM182T-S	$2,117	RSB	113	15	3.81	89.5	22.992	230/460	9
5	3.7	1800	184T	00518ET3EBM184T-S	$2,492	RSB	91	25	6.49	89.5	22.992	230/460	9
7.5	5.5	1800	213T	00718ET3EBM213T-S	$4,563	RSB	151	35	9.07	91.7	26.457	230/460	9
10	7.5	1800	215T	01018ET3EBM215T-S	$4,989	RSB	165	50	12.2	91.7	26.850	230/460	9
15	11	1800	254T	01518ET3EBM254T-S	$6,985	RSB	256	75	18.2	92.4	31.220	230/460	9
20	15	1800	256T	02018ET3EBM256T-S	$9,080	RSB	291	100	24.7	93.0	32.007	230/460	9

Please refer to back cover for description of "NOTES"

For detailed specifications, data sheets, drawings and performance curves visit http:// www.weg.net

Data subject to change without notice.

TEFC - C-Face - Foot Mount

HP	kW	RPM	Frame	Catalog Number	List Price	Mult Symbol	Approx. Shipping Weight (lbs)	Brake Torque (ft.lb)	FL. Amps @ High	FL. Eff (%)	"C" Dimension (in)	Volts	Notes
1	0.75	1800	56C	00118ET3EBM56C-S	$1,542	RSB	54	6	1.47	85.5	17.835	230/460	9
		1800	143TC	00118ET3EBM143TC-S	$1,767	RSB	55	6	1.47	85.5	17.914	230/460	9
1.5	1.1	1800	145TC	00158ET3EBM145TC-S	$1,904	RSB	56	10	2.02	86.5	17.914	230/460	9
2	1.5	1800	145TC	00218ET3EBM145TC-S	$1,959	RSB	60	10	2.72	86.5	18.307	230/460	9
3	2.2	1800	182TC	00318ET3EBM182TC-S	$2,189	RSB	113	15	3.81	89.5	22.992	230/460	9
5	3.7	1800	184TC	00518ET3EBM184TC-S	$2,564	RSB	91	25	6.49	89.5	22.992	230/460	9
7.5	5.5	1800	213TC	00718ET3EBM213TC-S	$4,702	RSB	151	35	9.07	91.7	26.457	230/460	9
10	7.5	1800	215TC	01018ET3EBM215TC-S	$5,128	RSB	165	50	12.2	91.7	26.850	230/460	9

TEFC - C-Face - Footless

HP	kW	RPM	Frame	Catalog Number	List Price	Mult Symbol	Approx. Shipping Weight (lbs)	Brake Torque (ft.lb)	FL. Amps @ High	FL. Eff (%)	"C" Dimension (in)	Volts	Notes
0.25	0.18	1800	W56C	.2518ES3EBMW56CFL-S	$966	RSB	24	3	0.50	66.0	14.610	208-230/460	9
0.33	0.25	1800	W56C	.3318ES3EBMW56CFL-S	$1,015	RSB	26	3	0.66	68.0	14.610	208-230/460	9
0.5	0.37	1800	W56C	.5018ES3EBMW56CFL-S	$1,143	RSB	27	3	1.00	72.0	15.004	208-230/460	9
0.75	0.55	1800	W56C	.7518ES3EBMW56CFL-S	$1,339	RSB	38	6	1.22	75.5	15.397	208-230/460	9
1	0.75	1800	56C	00118ET3EBM56CFL-S	$1,542	RSB	54	6	1.47	85.5	17.835	230/460	9
		1800	143TC	00118ET3EBMR143TC-S	$1,767	RSB	55	6	1.47	85.5	17.914	230/460	9
1.5	1.1	1800	145TC	00158ET3EBMR145TC-S	$1,904	RSB	56	10	2.02	86.5	17.914	230/460	9
2	1.5	1800	145TC	00218ET3EBMR145TC-S	$1,959	RSB	60	10	2.72	86.5	18.307	230/460	9
3	2.2	1800	182TC	00318ET3EBMR182TC-S	$2,189	RSB	113	15	3.81	89.5	22.992	230/460	9
5	3.7	1800	184TC	00518ET3EBMR184TC-S	$2,564	RSB	91	25	6.49	89.5	22.992	230/460	9
7.5	5.5	1800	213TC	00718ET3EBMR213TC-S	$4,702	RSB	151	35	9.07	91.7	26.457	230/460	9
10	7.5	1800	215TC	01018ET3EBMR215TC-S	$5,128	RSB	165	50	12.2	91.7	26.850	230/460	9

Motor Options upon Inquiry:

- Single-Phase Motor
- ODP or TENV Enclosure
- AEGIS® Inside

Please refer to back cover for description of "NOTES"

For detailed specifications, data sheets, drawings and performance curves visit http:// www.weg.net

Data subject to change without notice.

SAW ARBOR MOTORS

TEFC

Single and double shaft end available. These intermittent duty motors are suitable for a wide range of applications such as circular saws, pendulum saws, polishing machines, among others.

Standard Features:

- Class F insulation (Impregnation Resin and magnet Wire are class H)
- Ball bearings
- PG threaded terminal boxes

Features that make a difference:

- Reinforced cast iron frame
- Low profile

TEFC – Three-Phase – Right-Hand Thread

HP	kW	RPM	Frame	Catalog Number	List Price	Mult. Symbol	Approx. Shipping Weight (lbs)	Service Factor	FL Amps @ High	FL. Eff (%)	"C" Dimension (in)	Voltage (V)	Notes
3	2.2	3600	80S	**00336ES3ESA80SR**	**$969**	01	93	1.00	4.29	80.5	18.543	208-230/460	39
5	3.7	3600	80M	**00536ES3ESA80MR**	**$1,160**	01	109	1.00	6.65	85.0	20.512	208-230/460	39
		1800	90L	**00518ES3ESA90LR**	**$1,701**	01	163	1.00	7.03	84.5	26.476	208-230/460	39
7.5	5.5	3600	80L	**00736ES3ESA80LR**	**$1,642**	01	132	1.00	9.76	87.4	22.480	208-230/460	39
		3600	80L	**00736ES3HSA80LR**	**$1,642**	01	133	1.00	7.81	87.4	22.480	575	39
		1800	90L	**00718ES3ESA90LR**	**$1,855**	01	179	1.00	10.1	85.3	26.476	208-230/460	39
10	7.5	3600	90L	**01036ES3ESA90LR**	**$1,953**	01	178	1.00	12.3	85.0	26.476	208-230/460	39
		3600	90L	**01036ES3HSA90LR**	**$1,953**	01	179	1.00	9.84	85.0	26.476	575	39
		1800	90L	**01018ES3ESA90LR**	**$2,176**	01	192	1.00	14.7	85.5	26.476	208-230/460	39

TEFC – Three-Phase – Left-Hand Thread

HP	kW	RPM	Frame	Catalog Number	List Price	Mult. Symbol	Approx. Shipping Weight (lbs)	Service Factor	FL Amps @ High	FL. Eff (%)	"C" Dimension (in)	Voltage (V)	Notes
3	2.2	3600	80S	**00336ES3ESA80SL**	**$969**	01	93	1.00	4.29	80.5	18.543	208-230/460	39
5	3.7	3600	80M	**00536ES3ESA80ML**	**$1,160**	01	109	1.00	6.65	85.0	20.512	208-230/460	39
		1800	90L	**00518ES3ESA90LL**	**$1,701**	01	163	1.00	7.03	84.5	26.476	208-230/460	39
7.5	5.5	3600	80L	**00736ES3ESA80LL**	**$1,642**	01	132	1.00	9.76	87.4	22.480	208-230/460	39
		3600	80L	**00736ES3HSA80LL**	**$1,642**	01	134	1.00	7.81	87.4	22.480	575	39
		1800	90L	**00718ES3ESA90LL**	**$1,855**	01	177	1.00	10.1	85.3	26.476	208-230/460	39
10	7.5	3600	90L	**01036ES3ESA90LL**	**$1,953**	01	178	1.00	12.3	85.0	26.476	208-230/460	39
		3600	90L	**01036ES3HSA90LL**	**$1,953**	01	180	1.00	9.84	85.0	26.476	575	39
		1800	90L	**01018ES3ESA90LL**	**$2,176**	01	192	1.00	14.7	85.5	26.476	208-230/460	39

Please refer to back cover for description of "NOTES"

For detailed specifications, data sheets, drawings and performance curves visit http://www.weg.net

Data subject to change without notice.

SOOT BLOWER MOTORS

TEFC – C-Face – Footless

HP	kW	RPM	Frame	Catalog Number	List Price	Mult. Symbol	Approx. Shipping Weight (lbs)	Service Factor	FL Amps @ High	FL. Eff (%)	"C" Dimension (in)	Voltage (V)	Notes
1.5	1.1	1800	143/5TCZ	00158ET3ESB145TCZ1-S	$1,489	RSP	43	1.15	2.20	86.5	13.583	230/460	9;20
2	1.5	1800	143/5TCZ	00218ET3ESB145TCZ1-S	$1,612	RSP	47	1.15	2.70	86.5	13.976	230/460	9;20
		1800	143/5TCZ	00218ET3ESB145TCZ2-S	$1,612	RSP	47	1.15	2.70	86.5	14.049	230/460	9;20

Type -1 shaft

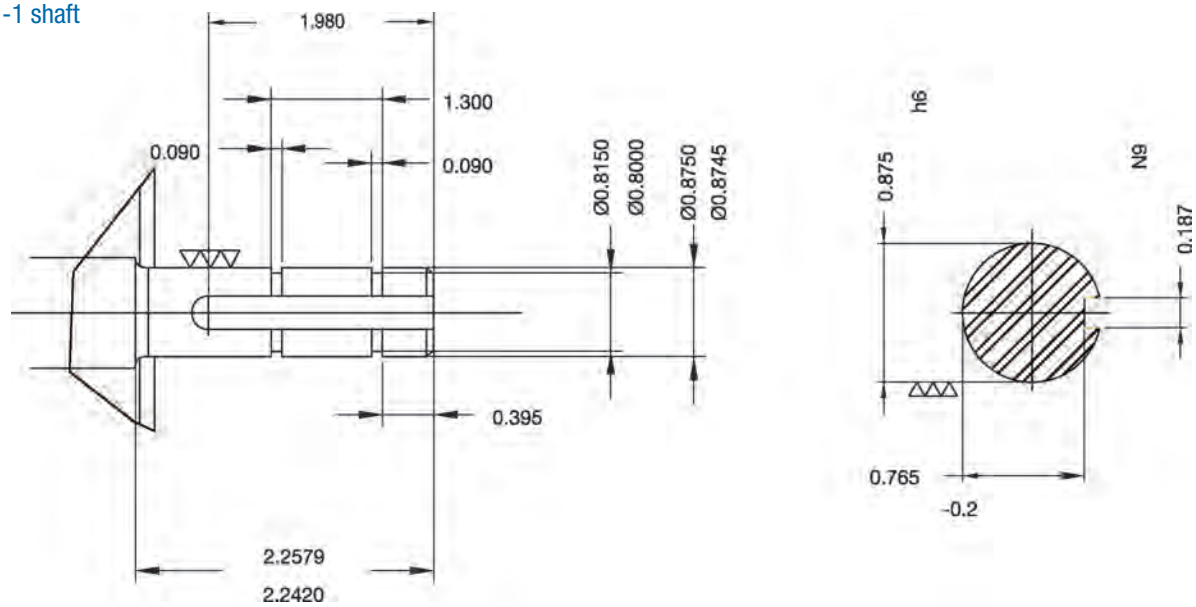

Type -2 shaft

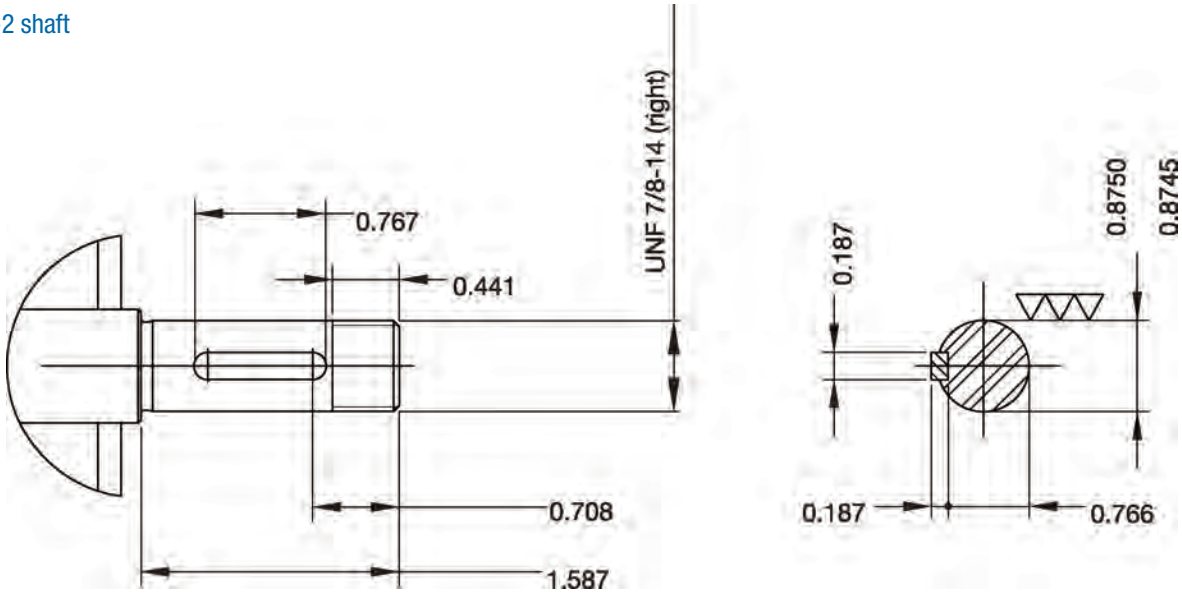

Please refer to back cover for description of "NOTES"

For detailed specifications, data sheets, drawings and performance curves visit http://www.weg.net

W22 Severe Duty Motors – TEFC

W22 Medium Voltage Motors – TEFC 2300 – 4160V A-264
W22 Medium Voltage Motors – TEFC Add-On Modifications A-265
W22 Medium Voltage 2300V - Electrical Data A-266
W22 Medium Voltage 4160V - Electrical Data A-268
Mechanical Data A-270
Medium Voltage Worksheet. A-274
SSW7000C Medium Voltage Soft Starter A-275

Data subject to change without notice.

TEFC SEVERE DUTY MV MOTORS

Standard Features:

- Voltage: 2300/4160V
- Frequency: 60Hz
- 1.15SF at D.O.L. starting and safe area
- Insulation Class F
- VPI Impregnation
- Class B Temperature Rise @ 1.00SF
- Class F Temperature Rise @ 1.15SF
- Aluminum Rotor (except where otherwise indicated)
- S1 Continuous Duty
- TEFC
- IP55 Protection Degree
- F1 Mounting
  Field conversion from F1 to F2 mounting available for all motors 250HP and above
- D.O.L. Starting
- Direct coupling
- Direction of Rotation:
  CW for 2P motors (250HP and above)
  Dual for 2P (200HP), 4P and 6P motors
- Altitude: 3300 f.a.s.l.
- Ambient temperature: 40ºC
- NEMA Premium® Efficiency (250HP and above)
- Grease lubricated antifriction (ball) bearings
- 100,000hs L10 bearings lifetime
- Final Color: Blue (RAL 5009)
- NEMA Type I main terminal box (loose leads)
- Automatic grease relief
- Grounding lugs on both sides of the frame
- 4140 Steel Shaft
- 36 Months warranty from manufacturing date

Standard Accessories:

- RTD Pt100 Temperature Detectors
  (02 per phase and 01 per bearing)
- Space Heater, 120V
- Provision (flat surface) for vibration sensors
- Provision for dowel pins

Severe Duty Features:

- Most relevant features of IEEE 841
- Vibration level as per IEEE 841
- Stainless Steel extended grease tubes
- INPRO/SEAL on DE and NDE sides
- 0.005” feet flatness
- Automatic threaded T-drains
  (stainless steel)
- Tropicalization
- IEEE 841 Test reports

V.F.D. Operation Features:

- 1.00SF at V.F.D. Operation
- Class B Temperature Rise @ 1.00SF
- Suitable for V.F.D. Operation
  10:1 VT with Class B temperature rise
  2:1 CT with Class F temperature rise
- Electrically Insulated N.D.E. bearing housing
- Helwig Shaft Grounding brush
  (Add-on Modification)

Note: A method of reducing common mode voltages from motor terminals must be utilized.

Hazardous Area Features:

- 1.00SF at Hazardous Area
- Class B Temperature Rise @ 1.00SF
- CSA Certification: Class I, Div. 2,
  Gr. A, B, C and D, T3
  (Except 600HP 6P – Safe Area only)
- Non-sparking external fan

Add-on Modifications from Stock

Note: For Add-on modifications, see page A253.

Note: Special attention to Reciprocating Compressors applications where the motor design must be evaluated and confirmed in a case by case basis.

HP	kW	RPM	NEMA Frame	Catalog Number	List Price	Multiplier	Approx. Shipping Weight (lbs)	Service Factor	FL. Eff (%)		"C" Dimension (in)	Voltage (V)	Notes
									2300V	4160V			
150	110	3600	L447/9TS	20036ET3XL449-W22MVR	$38,054	MAQ2	2758	1.15	93.20	93.00	53.431	2300/4160	
		1800	L447/9T	20018ET3XL449-W22MVR	$37,790	MAQ2	2608	1.15	93.30	93.30	57.181	2300/4160	
		1200	L447/9T	20012ET3XL449-W22MVR	$43,039	MAQ2	2720	1.15	93.60	93.60	57.181	2300/4160	
200	150	3600	L447/9TS	20036ET3XL449-W22MV	$38,054	MAQ2	2758	1.15	94.10	94.00	53.431	2300/4160	
		1800	L447/9T	20018ET3XL449-W22MV	$37,790	MAQ2	2608	1.15	93.80	93.80	57.181	2300/4160	
		1200	L447/9T	20012ET3XL449-W22MV	$43,039	MAQ2	2720	1.15	93.60	93.60	57.181	2300/4160	
250	185	3600	5009/10	25036ET3X5009-W50MV	$42,512	MAQ2	4272	1.15	95.00	95.00	64.159	2300/4160	
		1800	5009/10	25018ET3X5009-W50MV	$42,249	MAQ2	4457	1.15	95.00	95.00	70.035	2300/4160	
		1200	5009/10	25012ET3X5009-W50MV	$48,810	MAQ2	4567	1.15	95.00	95.00	70.035	2300/4160	
300	220	3600	5009/10	30036ET3X5009-W50MV	$51,698	MAQ2	4345	1.15	95.00	95.00	64.159	2300/4160	
		1800	5009/10	30018ET3X5009-W50MV	$47,239	MAQ2	4283	1.15	95.00	95.00	70.035	2300/4160	
		1200	5009/10	30012ET3X5009-W50MV	$55,371	MAQ2	4821	1.15	95.00	95.00	70.035	2300/4160	
350	260	3600	5009/10	40036ET3X5009-W50MVR	$61,669	MAQ2	4707	1.15	95.00	95.00	64.159	2300/4160	47
		1800	5009/10	40018ET3X5009-W50MVR	$60,848	MAQ2	4814	1.15	95.00	95.00	70.035	2300/4160	
		1200	5009/10	35012ET3X5009-W50MV	$61,532	MAQ2	4825	1.15	95.00	95.00	70.035	2300/4160	
400	300	3600	5009/10	40036ET3X5009-W50MV	$61,669	MAQ2	4707	1.15	95.00	95.00	64.159	2300/4160	47
		1800	5009/10	40018ET3X5009-W50MV	$60,848	MAQ2	4814	1.15	95.00	95.00	70.035	2300/4160	
		1200	5809/10	40012ET3X5809-W50MV	$68,812	MAQ2	6503	1.15	95.00	95.00	77.964	2300/4160	
450	330	3600	5809/10	50036ET3X5809-W50MVR	$79,517	MAQ2	5915	1.15	95.20	95.20	71.089	2300/4160	
		1800	5009/10	50018ET3X5009-W50MVR	$76,398	MAQ2	5008	1.15	95.00	95.00	70.035	2300/4160	47
		1200	5809/10	50012ET3X5809-W50MVR	$89,970	MAQ2	6479	1.15	95.00	95.00	77.964	2300/4160	
500	370	3600	5809/10	50036ET3X5809-W50MV	$79,517	MAQ2	5915	1.15	95.40	95.40	71.089	2300/4160	
		1800	5009/10	50018ET3X5009-W50MV	$76,398	MAQ2	5008	1.15	95.00	95.00	70.035	2300/4160	47
		1200	5809/10	50012ET3X5809-W50MV	$89,970	MAQ2	6479	1.15	95.00	95.00	77.964	2300/4160	
550	400	3600	5809/10	60036ET3X5809-W50MVR	$86,864	MAQ2	6359	1.15	95.40	95.40	71.089	2300/4160	47
		1800	5809/10	60018ET3X5809-W50MVR	$91,633	MAQ2	6351	1.15	95.40	95.40	77.964	2300/4160	
		1200	5809/10	60012ET3X5809-W50MVR	$105,217	MAQ2	6803	1.15	95.00	95.00	77.964	2300/4160	47;48
600	440	3600	5809/10	60036ET3X5809-W50MV	$86,864	MAQ2	6359	1.15	95.40	95.40	71.089	2300/4160	47
		1800	5809/10	60018ET3X5809-W50MV	$91,633	MAQ2	6351	1.15	95.40	95.40	77.964	2300/4160	
		1200	5809/10	60012ET3X5809-W50MV	$105,217	MAQ2	6803	1.15	95.00	95.00	77.964	2300/4160	47;48
650	480	1800	6806/07	70018ET3X6806-W50MVR	$105,814	MAQ2	7686	1.15	95.40	95.40	78.224	2300/4160	47
		1200	6808/09	70012ET3X6808-W50MVR	$117,307	MAQ2	9123	1.15	95.40	95.40	84.129	2300/4160	47
700	515	1800	6806/07	70018ET3X6806-W50MV	$105,814	MAQ2	7686	1.15	95.40	95.40	78.224	2300/4160	47
		1200	6808/09	70012ET3X6808-W50MV	$117,307	MAQ2	9123	1.15	95.40	95.40	84.129	2300/4160	47
750	560	1800	6808/09	80018ET3X6808-W50MVR	$114,209	MAQ2	8704	1.15	95.40	95.40	84.129	2300/4160	
800	590	1800	6808/09	80018ET3X6808-W50MV	$114,209	MAQ2	8704	1.15	95.40	95.40	84.129	2300/4160	

Please contact WEG for 50Hz MV motors from stock.

Add-On Modifications

NEMA FRAME			L447/9T 2P - MV	L447/9T 4/6P - MV	5000 2P - MV	5000 4/6P - MV	5800 2P - MV	5800 4/6P - MV	6800 4/6P - MV
REPLATE	**ADD CUSTOMER PART NUMBER AND / OR OTHER CHANGES SUCH AS VOLTAGE, HZ, ETC.**								
MOD. NUMBER	**NAMEPLATE**								
N-30	Main Nameplate Change - Stainless Steel	NET	$35.00	$35.00	$35.00	$35.00	$35.00	$35.00	$35.00
N-40	Additional Nameplate - Stainless Steel	NET	$35.00	$35.00	$35.00	$35.00	$35.00	$35.00	$35.00
ELECTRICAL ADD-ON'S	**INSTALLATION OF ENCODER**								
E-100	Installation of Encoder - Dynapar HSD38 1024PPR & 5/8" stub shaft	LIST	$1,145.00	$1,145.00	$1,876.00	$1,876.00	$2,176.00	$2,176.00	$2,426.00
E-120	Installation of Encoder - Additional Kit Required for Motors with Forced Ventilation (Motors designed with Ball Bearing at DE side)	LIST	$680.00	$680.00	$1,064.00	$1,064.00	$1,157.00	$1,157.00	$1,203.00
E-130	Installation of Encoder - Additional Kit Required for Motors with Forced Ventilation (Motors designed with Roller Bearing at DE side)	LIST	N/A	$876.00	N/A	$1,089.00	N/A	$1,218.00	$1,263.00
C-FLANGE KIT	**INSTALLATION OF C-FLANGE KITS**								
C-90	Installation of C-FLANGE	LIST	$1,793.00	$1,793.00	$3,071.00	$3,071.00	$3,517.00	$3,517.00	$4,190.00
D-FLANGE KIT	**INSTALLATION OF D-FLANGE KITS**								
D-130	Installation of D-FLANGE	LIST	$1,711.00	$1,711.00	$2,613.00	$2,613.00	$3,041.00	$3,041.00	$3,421.00
COOLING	**INSTALLATION OF BLOWER KIT (FORCED VENTILATION) AND CHANGE DIRECTION OF ROTATION**								
F-210	Forced Ventilation (230/460V 60Hz): Blower Cooling (w/o Encoder) (Safe Area)	LIST	$2,449.00	$2,449.00	$4,300.00	$4,300.00	$4,697.00	$4,697.00	$5,030.00
F-220	Forced Ventilation (240/480V 60Hz): Blower Cooling (w/o Encoder) (Hazardous Area)	LIST	N/A	N/A	$4,576.00	$4,576.00	$5,118.00	$5,118.00	$5,625.00
F-230	Change Direction of Rotation - CCW External Fan for 2P motors	LIST	N/A	N/A	$1,064.00	N/A	$1,170.00	N/A	N/A
BEARINGS	**BEARING CHANGE OUTS & SHAFT GROUNDING MODIFICATION**								
B-200	Ball to Roller Bearing Conversion	LIST	N/A	$1,813.00	N/A	$2,544.00	N/A	$2,714.00	$2,934.00
B-250	Installation of Helwig Grounding Brush (Includes Brush and Brush Holder - DE only)	LIST	$1,385.00	$1,385.00	$1,385.00	$1,385.00	$1,385.00	$1,385.00	$1,385.00
MOUNTING	**TERMINAL BOX**								
M-280	F1 to F2 Mounting Conversion	LIST	$524.00	$524.00	$839.00	$839.00	$839.00	$839.00	$839.00
M-330	Oversized NEMA Type II Main Terminal Box	LIST	N/A	N/A	$3,504.00	$3,504.00	$3,504.00	$3,504.00	$3,504.00
M-320	Install terminal block in terminal box	LIST	N/A	N/A	$2,790.00	$2,790.00	$2,790.00	$2,790.00	$2,790.00

Electrical Data 2300V

Rated Output		Full Load Speed (RPM)	NEMA Frame	Locked Rotor Current (2300V)		Full Load Amps	2300V		
HP	kW			kVA Code	Il/In		Full Load Torque - Tn (lb.ft)	Locked Rotor Torque (Tl/Tn)	Breakdown torque (Tb/Tn)
150	110	3586	L447/9TS	M	11.4	36.1	220	2.40	3.70
		1789	L447/9T	K	8.0	37.9	440	1.80	2.80
		1189	L447/9T	K	7.7	40.4	662	2.00	2.80
200	150	3580	L447/9TS	K	8.7	47.1	293	1.80	2.80
		1786	L447/9T	G	6.0	48.4	588	1.40	2.10
		1185	L447/9T	G	6.0	51.6	886	1.50	2.10
250	185	3574	5009/10	G	6.4	55.5	367	1.00	2.10
		1783	5009/10	G	6.2	58.2	736	1.40	2.20
		1188	5009/10	G	5.7	61.9	1105	1.40	2.10
300	220	3575	5009/10	G	6.5	65.3	441	1.00	2.10
		1782	5009/10	G	6.2	68.4	884	1.40	2.10
		1183	5009/10	G	5.8	73.6	1332	1.60	2.20
350	260	3575	5009/10	H	7.4	78.1	514	1.10	2.40
		1787	5009/10	H	6.7	83.8	1029	1.70	2.40
		1184	5009/10	G	5.7	87.0	1552	1.70	2.30
400	300	3571	5009/10	G	6.5	89.1	588	1.00	2.10
		1785	5009/10	G	6.0	94.4	1177	1.50	2.10
		1189	5809/10	G	5.8	100	1767	1.50	2.10
450	330	3575	5809/10	H	7.2	98.9	661	1.30	2.65
		1789	5009/10	H	6.9	105	1321	0.90	2.65
		1192	5809/10	H	6.5	113	1982	1.65	2.30
500	370	3571	5809/10	G	6.5	109	735	1.20	2.40
		1787	5009/10	G	6.3	116	1469	0.80	2.40
		1191	5809/10	G	6.0	124	2205	1.50	2.10
550	400	3578	5809/10	H	7.4	121	807	1.20	2.50
		1788	5809/10	H	7.0	125	1615	1.85	2.40
		1193	5809/10	H	6.8	137	2421	1.00	2.70
600	440	3576	5809/10	G	6.7	132	881	1.10	2.30
		1786	5809/10	G	6.5	136	1764	1.70	2.20
		1192	5809/10	G	6.3	147	2643	0.90	2.50
650	480	1789	6806/07	H	6.9	152	1908	1.50	2.45
		1193	6808/09	H	7.0	149	2861	0.90	2.45
700	515	1789	6806/07	G	6.5	161	2055	1.40	2.30
		1193	6808/09	G	6.5	158	3081	0.85	2.30
750	560	1789	6808/09	H	6.8	180	2201	1.60	2.35
800	590	1789	6808/09	G	6.5	187	2348	1.50	2.20

Please contact WEG for 50Hz MV motors from stock.

continued on next page

Data subject to change without notice.

Electrical Data 2300V (continued)

Rated Output		Efficiency (2300V)			Power Factor (2300V)			Moment of Inertia WK2 (lb.ft2)	Approx. Weight (lb)	Approx. Sound Level dB(A)
		% of Full load								
HP	kW	50	75	100	50	75	100			
150	110	90.00	92.20	93.20	0.63	0.75	0.82	37.7	2536	88
		91.00	92.60	93.30	0.60	0.72	0.78	94.9	2386	79
		91.50	93.20	93.60	0.52	0.65	0.73	114.0	2498	71
200	150	92.40	93.60	94.10	0.72	0.82	0.85	37.7	2536	88
		92.60	93.80	93.80	0.70	0.79	0.83	94.9	2386	79
		92.80	93.60	93.60	0.63	0.73	0.78	114.0	2498	71
250	185	93.60	94.10	95.00	0.83	0.87	0.88	83.1	3803	79
		93.00	94.10	95.00	0.70	0.81	0.84	94.9	3971	79
		93.60	94.50	95.00	0.66	0.76	0.79	138.0	4081	77
300	220	93.60	94.10	95.00	0.83	0.88	0.89	88.5	3876	79
		93.60	94.10	95.00	0.74	0.82	0.85	114.0	3797	79
		93.60	94.50	95.00	0.66	0.74	0.79	159.0	4335	77
350	260	93.60	94.50	95.00	0.81	0.86	0.88	99.7	4238	79
		93.60	94.10	95.00	0.67	0.77	0.82	157.0	4328	79
		93.60	94.50	95.00	0.64	0.75	0.79	168.0	4339	77
400	300	94.10	94.50	95.00	0.83	0.87	0.89	99.7	4238	79
		94.10	94.50	95.00	0.72	0.80	0.84	157.0	4328	79
		94.10	94.50	95.00	0.67	0.76	0.79	382.0	5980	77
450	330	94.20	94.90	95.20	0.83	0.87	0.88	142.0	5415	82
		94.10	95.00	95.00	0.70	0.79	0.83	166.0	4522	79
		93.60	94.50	95.00	0.60	0.71	0.77	384.0	5956	77
500	370	94.50	95.00	95.40	0.85	0.89	0.89	142.0	5415	82
		94.50	95.00	95.00	0.73	0.81	0.84	166.0	4522	79
		94.10	94.50	95.00	0.63	0.73	0.79	384.0	5956	77
550	400	94.30	95.10	95.40	0.78	0.85	0.87	159.0	5859	82
		94.50	95.20	95.40	0.72	0.80	0.84	275.0	5828	82
		93.10	94.30	95.00	0.59	0.70	0.77	418.0	6280	77
600	440	94.70	95.40	95.40	0.80	0.86	0.88	159.0	5859	82
		95.00	95.40	95.40	0.75	0.81	0.85	275.0	5828	82
		93.30	94.50	95.00	0.62	0.73	0.79	418.0	6280	77
650	480	94.30	94.80	95.40	0.71	0.80	0.83	427.0	7074	82
		94.80	95.40	95.40	0.74	0.82	0.85	724.0	8500	81
700	515	94.50	95.00	95.40	0.73	0.81	0.84	427.0	7074	82
		95.00	95.40	95.40	0.75	0.83	0.86	724.0	8500	81
750	560	94.90	95.40	95.40	0.71	0.79	0.82	534.0	8081	82
800	590	95.00	95.40	95.40	0.72	0.80	0.83	534.0	8081	82

Please contact WEG for 50Hz MV motors from stock.

Electrical Data - 4160V

Rated Output		Full Load Speed (RPM)	NEMA Frame	Locked Rotor Current (4160V)		Full Load Amps	4160V		
HP	kW			kVA Code	Il/In		Full Load Torque - Tn (lb.ft)	Locked Rotor Torque (Tl/Tn)	Breakdown torque (Tb/Tn)
150	110	3587	L447/9TS	N	11.4	20.5	220	2.60	4.00
		1790	L447/9T	K	8.3	21.3	440	2.00	3.00
		1190	L447/9T	L	8.1	23.3	662	2.10	3.00
200	150	3582	L447/9TS	N	8.7	26.4	293	2.00	3.00
		1787	L447/9T	H	6.5	27.4	588	1.50	2.30
		1186	L447/9T	H	6.5	29.3	886	1.60	2.30
250	185	3576	5009/10	H	7.5	30.7	367	1.10	2.20
		1785	5009/10	H	6.8	32.2	735	1.50	2.30
		1189	5009/10	H	6.4	34.6	1104	1.60	2.20
300	220	3576	5009/10	H	7.3	36.1	441	1.10	2.30
		1784	5009/10	G	6.5	38.3	883	1.50	2.20
		1185	5009/10	H	6.4	41.2	1329	1.70	2.30
350	260	3577	5009/10	J	8.2	43.2	514	1.25	2.50
		1788	5009/10	J	7.5	47.5	1028	1.90	2.50
		1185	5009/10	H	6.3	48.7	1551	1.80	2.50
400	300	3573	5009/10	H	7.2	49.2	588	1.10	2.20
		1786	5009/10	H	6.7	52.8	1176	1.70	2.20
		1190	5809/10	H	6.3	56.2	1765	1.70	2.20
450	330	3577	5809/10	J	8.2	54.7	661	1.40	2.85
		1789	5009/10	J	7.6	58.8	1321	1.00	2.85
		1192	5809/10	J	7.0	64.3	1982	1.75	2.45
500	370	3574	5809/10	H	7.4	60.5	735	1.30	2.60
		1787	5009/10	H	6.8	65.1	1469	0.90	2.60
		1191	5809/10	H	6.5	70.2	2205	1.60	2.20
550	400	3580	5809/10	J	8.0	68.5	807	1.30	2.70
		1789	5809/10	J	7.8	70.1	1614	1.95	2.50
		1193	5809/10	J	7.1	77.9	2421	1.10	2.90
600	440	3578	5809/10	H	7.2	74.4	881	1.20	2.50
		1787	5809/10	H	7.0	76.2	1763	1.80	2.30
		1192	5809/10	H	6.5	83.5	2643	1.00	2.70
650	480	1790	6806/07	J	7.6	85.2	1907	1.60	2.55
		1193	6808/09	J	7.8	83.1	2861	1.00	2.55
700	515	1790	6806/07	H	6.8	90.3	2054	1.50	2.40
		1193	6808/09	H	7.0	88.1	3081	0.95	2.40
750	560	1790	6808/09	J	7.5	101	2200	1.80	2.45
800	590	1790	6808/09	H	7.0	105	2347	1.70	2.30

Please contact WEG for 50Hz MV motors from stock.

continued on next page

Data subject to change without notice.

Electrical Data 4160V (continued)

Rated Output		Efficiency (4160V)			Power Factor (4160V)			Moment of Inertia WK2 (lb.ft2)	Approx. Weight (lb)	Approx. Sound Level dB(A)
		% of Full load								
HP	kW	50	75	100	50	75	100			
150	110	89.60	91.90	93.00	0.60	0.72	0.80	37.7	2536	88
		91.00	92.60	93.30	0.57	0.69	0.77	94.9	2386	79
		91.50	93.20	93.60	0.48	0.61	0.70	114.0	2498	71
200	150	92.10	93.40	94.00	0.70	0.80	0.84	37.7	2536	88
		92.60	93.80	93.80	0.67	0.77	0.81	94.9	2386	79
		92.80	93.60	93.60	0.59	0.70	0.76	114.0	2498	71
250	185	93.60	94.10	95.00	0.83	0.87	0.88	83.1	3803	79
		93.00	94.10	95.00	0.70	0.81	0.84	94.9	3971	79
		93.60	94.50	95.00	0.63	0.74	0.78	138.0	4081	77
300	220	93.60	94.10	95.00	0.83	0.87	0.89	88.5	3876	79
		93.60	94.10	95.00	0.72	0.81	0.84	114.0	3797	79
		93.60	94.50	95.00	0.63	0.73	0.78	159.0	4335	77
350	260	93.60	94.50	95.00	0.80	0.86	0.88	99.7	4238	79
		93.60	94.10	95.00	0.65	0.76	0.80	157.0	4328	79
		93.60	94.50	95.00	0.61	0.71	0.78	168.0	4339	77
400	300	94.10	94.50	95.00	0.82	0.87	0.89	99.7	4238	79
		94.10	94.50	95.00	0.70	0.79	0.83	157.0	4328	79
		94.10	94.50	95.00	0.64	0.74	0.78	382.0	5980	77
450	330	94.20	94.90	95.20	0.82	0.87	0.88	142.0	5415	82
		94.10	95.00	95.00	0.67	0.77	0.82	166.0	4522	79
		93.60	94.50	95.00	0.58	0.68	0.75	384.0	5956	77
500	370	94.50	95.00	95.40	0.84	0.89	0.89	142.0	5415	82
		94.50	95.00	95.00	0.71	0.80	0.83	166.0	4522	79
		94.10	94.50	95.00	0.60	0.71	0.77	384.0	5956	77
550	400	94.30	95.10	95.40	0.75	0.82	0.85	159.0	5859	82
		94.50	95.20	95.40	0.71	0.79	0.83	275.0	5828	82
		93.10	94.30	95.00	0.56	0.68	0.75	418.0	6280	77
600	440	94.70	95.40	95.40	0.77	0.83	0.86	159.0	5859	82
		95.00	95.40	95.40	0.73	0.80	0.84	275.0	5828	82
		93.30	94.50	95.00	0.58	0.71	0.77	418.0	6280	77
650	480	94.30	94.80	95.40	0.69	0.79	0.82	427.0	7074	82
		94.80	95.40	95.40	0.72	0.81	0.84	724.0	8500	81
700	515	94.50	95.00	95.40	0.71	0.80	0.83	427.0	7074	82
		95.00	95.40	95.40	0.74	0.82	0.85	724.0	8500	81
750	560	94.90	95.40	95.40	0.68	0.77	0.81	534.0	8081	82
800	590	95.00	95.40	95.40	0.70	0.79	0.82	534.0	8081	82

Please contact WEG for 50Hz MV motors from stock.

Mechanical Data

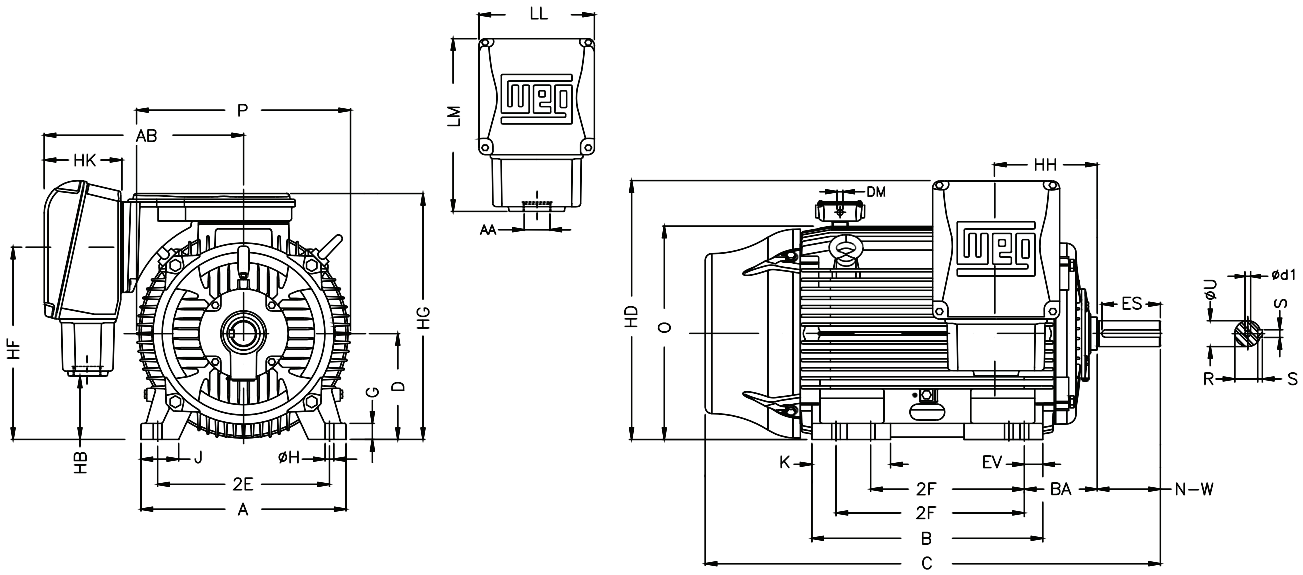

NEMA	Mounting														
	FRAME	2E	2F	EV	H	BA	A	B	C	D	G	J	K	O	P
	L447/9T	18	20	2.638	0.81	7.5	21.929	31.535	57.181	11	1.63	3.937	8.78	23.874	25.866
	L447/9TS		25						53.431						

NEMA	KEYWAY				SHAFT EXTENSION	
	FRAME	S	R	ES	N-W	U
	L447/9T	0.875	2.88	7.087	8.5	3.375
	L447/9TS	0.625	2.021	3	4.75	2.375

NEMA	TERMINAL BOX													BEARINGS	
	FRAME	AB	HB	HD	HF	HG	HH	HK	LL	LM	AA	DM	d1	D.E.	N.D.E.
	L447/9T	28.543	2.125	30.906	21.024	28.236	11.5	14.291	18.11	28.74	1 x NPT 3”	2 x NPT 3/4”	DUNC 3/4”-10	6322-C3	6319-C3
	L447/9TS													6314-C3	6314-C3

Data subject to change without notice.

Mechanical Data

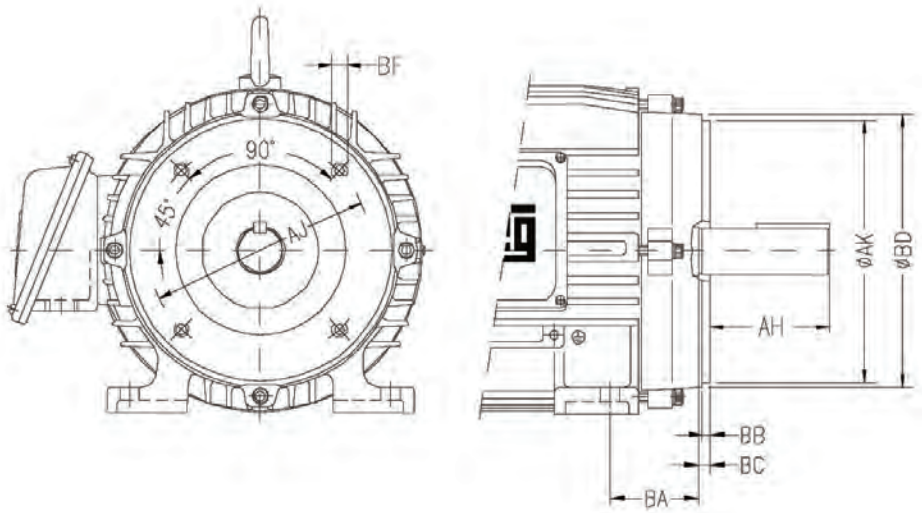

NEMA	"C" FLANGE DIMENSIONS								
	FRAME	BA	AJ	AK	BD	BF	BB	BC	AH
	L447/9T	7.5	14	16	17.91	UNC 5/8" x 11	0.25	0.25	8.25
	L447/9TS								

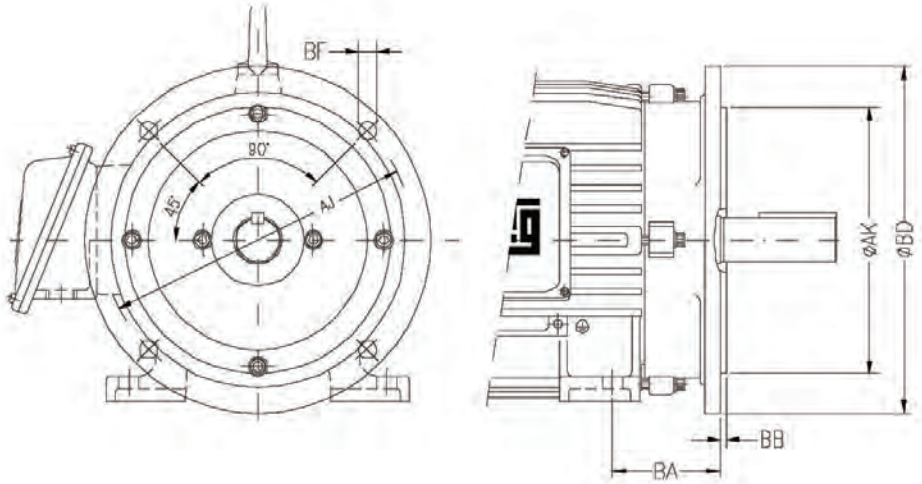

NEMA	"D" FLANGE DIMENSIONS						
	FRAME	BA	AJ	AK	BD	BF	BB
	L447/9T	7.5	20	18	21.65	0.828	0.203
	L447/9TS						

Mechanical Data

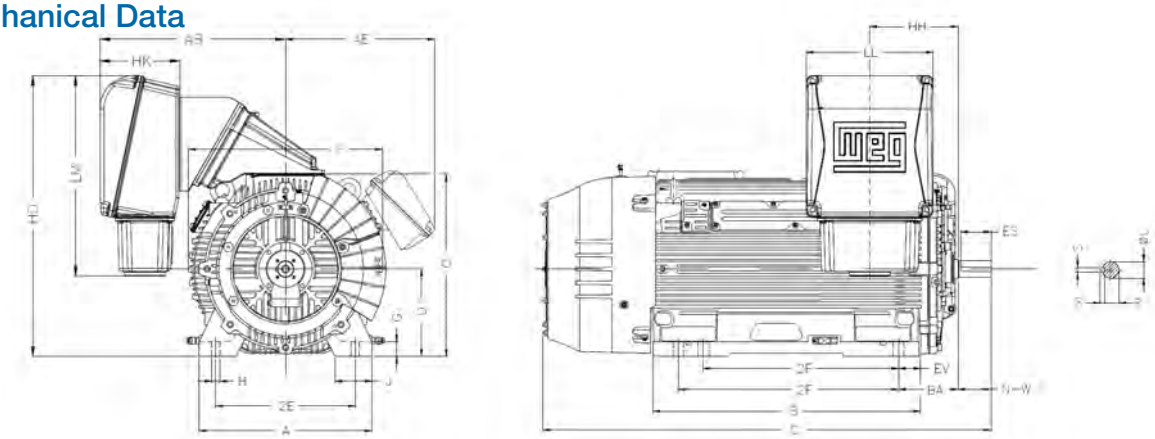

	MOUNTING															
	FRAME	Speed	2E	2F	EV	H	BA	A	B	C	D	G	J	K	O	P
NEMA	5009/10	2P	20	28.000 / 32.000	3.151	1.181	8.503	24.724	38.585	64.159	12.5	2.073	5.279	11.12	26.083	27.795
		4P & 6P					8.504			70.035						
	5809/10	2P	23	32.000 / 36.000	3.491	1.181	10	29.506	42.415	71.089	14.5	2.498	5.793	11.596	30.051	31.086
		4P & 6P								77.964						
	6806/07	4P	27	28.000 / 32.000	4.575	1.417	11.5	33.071	42.226	78.224	17	1.967	7.064	11.74	34.52	34.646
	6808/09	4P & 6P		36.000 / 40.000					48.126	84.129				11.737		

	KEYWAY					SHAFT EXTENSION	
	FRAME	Speed	S	R	ES	N-W	U
NEMA	5009/10	2P	0.625	2.02	4.331	4.75	2.375
		4P & 6P	0.875	3.134	9.055	10.625	3.625
	5809/10	2P	0.625	2.021	4.331	4.75	2.375
		4P & 6P	1	3.309	9.843	11.625	3.875
	6806/07	4P	1	3.817	9.843	11.625	4.375
	6808/09	4P & 6P					

	TERMINAL BOX											
	FRAME	Speed	AB	AE	HD	HH	HK	LL	LM	AA	DM	d1
NEMA	5009/10	2P	26.536	21.343	40.196	12.638	11.41	18.11	28.712	1 x NPT 3”	3 x NPT 3/4”	DUNC 3/4”-10
		4P & 6P										DUNC 7/8”-9
	5809/10	2P	26.69	22.397	44.168	13.74	11.41	18.11	28.74	1 x NPT 3”	3 x NPT 3/4”	DUNC 3/4”-10
		4P & 6P										DUNC 7/8”-9
	6806/07	4P & 6P	29.901	23.697	48.588	13.862	11.41	18.11	28.72	1 x NPT 3”	3 x NPT 3/4”	DUNC 1”-8
	6808/09											

	BEARINGS			
	FRAME	Speed	D.E.	N.D.E.
NEMA	5009/10	2P	6314-C3	6314-C3
		4P & 6P	6320-C3	6316-C3
	5809/10	2P	6314-C3	6314-C3
		4P & 6P	6322-C3	6319-C3
	6806/07	4P & 6P	6324-C3	6319-C3
	6808/09			

Data subject to change without notice.

Mechanical Data

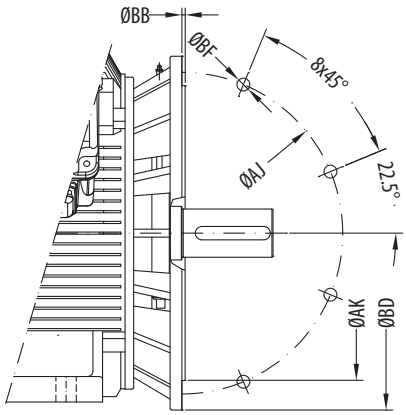

NEMA	"D" FLANGE DIMENSIONS						
	FRAME	FLANGE	BB	AJ	AK	BD	BF
	5009/10	D-558	0.250	22.000	18.000	24.000	0.827
	5809/10	D-762	0.250	30.000	28.000	32.000	0.827
	6806/07	FF-940	0.250	35.252	33.250	37.250	1.000
	6808/09	FF-1080	0.250	35.252	33.250	37.250	1.000

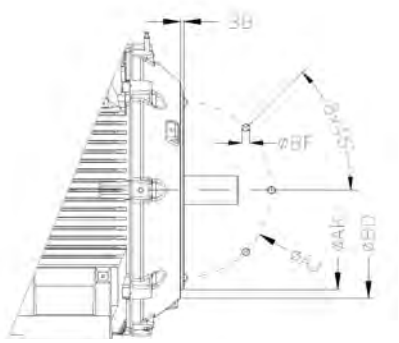

NEMA	"C" FLANGE DIMENSIONS						
	FRAME	FLANGE	BB	AJ	AK	BD	BF
	5009/10	FC 368	0.25	14.5	16.5	17.9	UNC 5/8"-11 x 8
	5809/10		0.25	14.5	16.5	17.9	UNC 1"-8 x 8
	6806/7	FC 533	0.25	21	23	24.9	UNC 1"-8 x 8
	6808/9	FC 533	0.25	21	23	24.9	UNC 1"-8 x 8

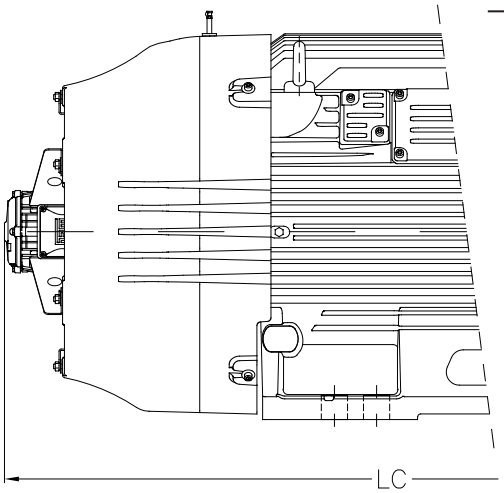

NEMA	MOTOR TOTAL LENGTH WITH INSTALLED BLOWER		
	FRAME	SPEED	C
	5009/10	2P	70.577
		4P & 6P	76.432
	5809/10	2P	77.486
		4P & 6P	84.361
	6806/07	4P	84.621
	6808/09	4P & 6P	90.527

LET US KNOW ABOUT YOUR APPLICATION

Please fill in and provide the below information (as much as possible) to ensure WEG's motor design matches your particular application.

Date: / /

Submitted by: E-mail:

Customer/ Project: Specification:

Customer ref.:

MAIN FEATURES:

Quantity: _____ Voltage: _____

Number of Poles: _____ Frequency: 60 Hz

Output: _____(kW/ HP)

ADDITIONAL FEATURES:

Cooling System: TEFC

Service Factor:_____

Degree of Protection: IP55

Starting Method: _____

Temperature Rise: _____

Ambient Temperature: _____

Hazardous Area: Zone/ Division: _____

Rotation (facing DE): _____

Duty Cycle: _____

Starting Method: _____

Speed Range (V.F.D.): _____

Coupling: _____

Altitude: _____

Group/ Class: _____ Temp. Class: _____

Pulley and Belt Coupling:

Coupling Type:

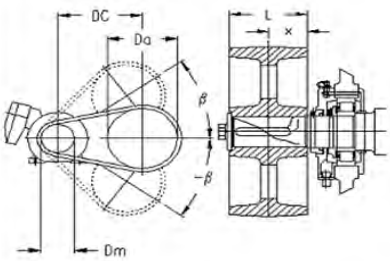

*DM =	[in]
*Da =	[in]
*DC =	[in]
*L =	[in]
*x =	[in]
*ß =	[degrees]
*Weight =	[lb]
*Number of Belts =	
*Type of Belt =	

* Just for Pulley & Belt Coupling

LOAD DATA:

Driven Machine: _____

Rotation (rpm): _____

Inertia (J = sq.ft.lb): _____

Torque x Speed Curve type: _____

Absorbed Power: _____

Load Torque x Speed Curve

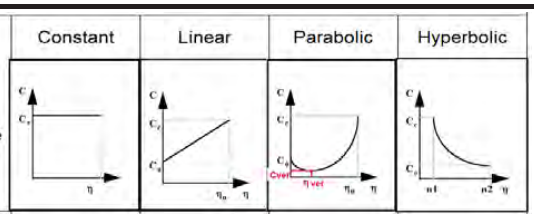

ADD-ON MODIFICATIONS (Check as necessary):

- ☐ Main nameplate change
- ☐ Additional Nameplate
- ☐ Encoder Dynapar HSD38 1024ppr
- ☐ C-Flange
- ☐ D-Flange
- ☐ Forced Ventilation (Blower Cooling)
- ☐ Change Direction of Roation (2P motors only)
- ☐ Ball to Roller Bearing conversion
- ☐ Helwig Shaft grounding brush
- ☐ F1 to F2 mounting conversion
- ☐ Oversized NEMA Type II Main terminal box
- ☐ Terminal Block inside Main terminal box

Data subject to change without notice.

SSW7000C Medium Voltage Soft Starter

Product Code

SSW7000C Catalog Number Sequence

SSW7000C	100	T	4	11	N2

Motor Current
100

Power Supply
T - Three Phase

Rated Voltage
2 - 2.3kV
4 - 4.16kV

Single Phase Control Supply
110V AC, 1 ph

Protection Degree
N2 - NEMA 12

Rating

Power Supply	Catalog Number	Control Voltage	Motor Power		List Price	Multiplier
			HP*	kW		
2300V, 3PH, 60HZ	SSW7000C100T211N2	110V, 1Ph	400	300	$58,322	E3
	SSW7000C120T211N2	110V, 1Ph	500	373	$58,684	
	SSW7000C150T211N2	110V, 1Ph	600	450	$60,294	
	SSW7000C180T211N2	110V, 1Ph	750	560	$61,749	
	SSW7000C210T211N2	110 V, 1Ph	950	700	$62,570	
	SSW7000C240T211N2	110V, 1Ph	1100	800	$63,851	
	SSW7000C300T211N2	110 V, 1Ph	1350	1000	$69,396	
	SSW7000C370T211N2	110V, 1Ph	1650	1200	$70,960	
	SSW7000C430T211N2	110V, 1Ph	1900	1400	$73,789	
4160V, 3PH, 60HZ	SSW7000C100T411N2	110V, 1Ph	750	560	$65,721	
	SSW7000C120T411N2	110V, 1Ph	1000	750	$67,347	
	SSW7000C150T411N2	110V, 1Ph	1250	925	$68,901	
	SSW7000C180T411N2	110V, 1Ph	1500	1100	$70,728	
	SSW7000C210T411N2	110 V, 1Ph	1750	1300	$71,560	
	SSW7000C240T411N2	110V, 1Ph	2000	1500	$73,235	
	SSW7000C300T411N2	110 V, 1Ph	2500	1850	$80,861	
	SSW7000C370T411N2	110V, 1Ph	3000	2250	$82,080	
	SSW7000C430T411N2	110V, 1Ph	3500	2600	$86,656	

Synchronous Alternators

WEG's extensive experience in the manufacturing of alternators in addition to modern design, production capacity and testing facilities, has resulted in a range of brushless synchronous alternators.

Available up to 4,200 kVA, the G Plus and AG10 lines are suitable for all emergency, prime power or continuous operation in these areas:

- Industrial
- Commercial
- Marine
- Telecommunication
- Mining
- Residential
- Irrigation
- Hospitals
- Rural areas
- Airports and others

Technical Features:

- Output power: up to 2,455 kVA (others upon request)
- Frames: 160 to 400 (IEC)
- Low voltage: 110 to 690 V
- High voltage: 2,300 to 13,800 V (upon request)
- Frequency: 50 to 60 Hz
- Degree of protection: IP23 (standard), IP44 to IP55W (upon request)
- Insulation class: 180 °C (H) low voltage and 155 °C (F) high voltage
- Winding pitch: 2/3 (160 to 315)
- THD: ≤ 3%
- Number of poles: 4 poles (standard), 6 and 8 poles (upon request)
- Leads: 12 or 6 leads
- Vacuum Pressure Impregnation (VPI) with harsh environment epoxy winding protection as standard

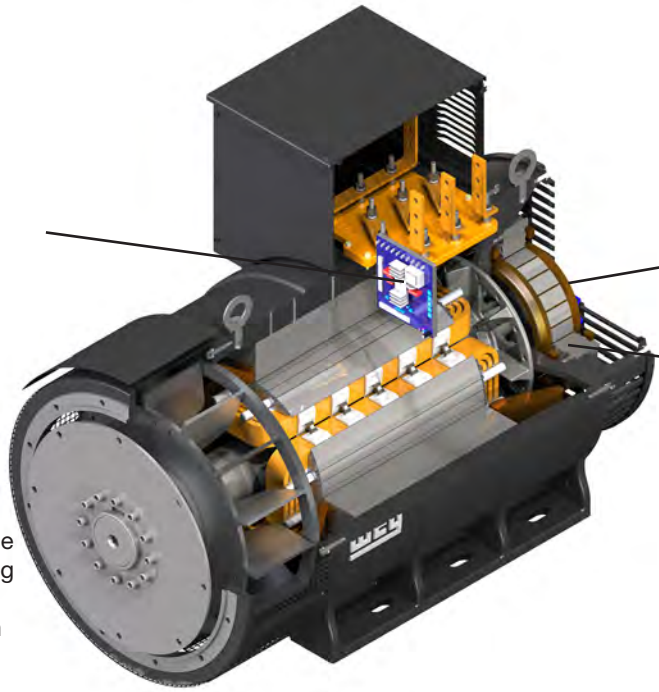

Data subject to change without notice.

G Plus Line

	Leads	Catalog Number			480V - Y / 240V - YY					List Price	Multi. Symbol
			DT	SAE	80ºC	105ºC	125ºC	150ºC	163ºC		
G Plus	12	161AIHS-S	kVA	4/7.5	15	17	18	20	20	$3,206	LV ALT
			kW		12	13	15	16	16		
	12	161AIHS-3115M	kVA	3/11.5	15	17	18	20	20	$3,206	LV ALT
			kW		12	13	15	16	16		
	12	161AIHI-S	kVA	4/7.5	21	23	26	29	30	$3,468	LV ALT
			kW		17	19	20	23	23		
	12	161AIHI-311.5M	kVA	3/11.5	21	23	26	29	30	$3,468	LV ALT
			kW		17	19	20	23	23		
	12	162AIVD-S	kVA	4/7.5	26	30	42	44	46	$4,078	LV ALT
			kW		21	24	33	35	37		
	12	162AIVD-3115M	kVA	3/11.5	26	30	42	44	46	$4,078	LV ALT
			kW		21	24	33	35	37		
	12	201AIHV-S	kVA	3/11.5	56	65	71	77	81	$5,357	LV ALT
			kW		45	52	56	62	65		
	12	201AIHE-S	kVA	3/11.5	66	76	88	95	97	$6,143	LV ALT
			kW		53	60	70	76	78		
	12	202AIVS-S	kVA	3/11.5	88	101	110	116	120	$6,643	LV ALT
			kW		70	81	88	93	96		
	12	202AIVJ-S	kVA	3/11.5	107	123	141	144	150	$7,607	LV ALT
			kW		86	98	113	115	120		
	12	251AIHD-S	kVA	3/11.5	140	161	175	188	189	$8,393	LV ALT
			kW		112	129	140	150	151		
	12	251AIHE-S	kVA	3/11.5	180	206	225	243	252	$9,821	LV ALT
			kW		144	165	180	194	202		
	12	251AIHE-2115M	kVA	2/11.5	180	206	225	243	252	$9,821	LV ALT
			kW		144	165	180	194	202		

AG10 Line

	Leads	Catalog Number			480V - Y / 240V - YY					List Price	Multi. Symbol
			DT	SAE	80ºC	105ºC	125ºC	150ºC	163ºC		
AG10	12	250SI50AI-3115M	kVA	3/11.5	208	238	260	290	295	$10,735	LV ALT
			kW		166	191	208	232	236		
	12	250SI50AI-2115M	kVA	2/11.5	208	238	260	290	295	$10,735	LV ALT
			kW		166	191	208	232	236		
	12	250SI50AI-S	kVA	1/14	208	238	260	290	295	$10,735	LV ALT
			kW		166	191	208	232	236		
	12	250MI60AI-2115M	kVA	3/11.5	250	288	312	345	360	$11,598	LV ALT
			kW		200	230	250	276	288		
	12	250MI60AI-2115M	kVA	2/11.5	250	288	312	345	360	$11,598	LV ALT
			kW		200	230	250	276	288		
	12	250MI60AI-S	kVA	1/14	250	288	312	345	360	$11,598	LV ALT
			kW		200	230	250	276	288		
	12	250MI70AI-S	kVA	1/14	292	335	365	400	417	$13,393	LV ALT
			kW		234	268	292	320	334		
	12	250MI80AI-S	kVA	1/14	324	371	405	460	470	$14,250	LV ALT
			kW		259	297	324	368	376		
	12	280MI50AI-S	kVA	1/14	378	440	472	517	550	$15,520	LV ALT
			kW		302	352	378	414	440		
	12	280MI60AI-S	kVA	1/14	412	472	515	550	580	$17,218	LV ALT
			kW		330	378	412	440	464		
	12	315MI50AI-S	kVA	1/14	520	596	650	700	750	$19,586	LV ALT
			kW		416	477	520	560	600		
	12	315MI50AI-018M	kVA	0/18	520	596	650	700	750	$19,586	LV ALT
			kW		416	477	520	560	600		
	12	315MI60AI-S	kVA	1/14	570	650	710	780	825	$21,964	LV ALT
			kW		456	520	568	624	660		
	12	315MI60AI-018M	kVA	0/18	570	650	710	780	825	$21,964	LV ALT
			kW		456	520	568	624	660		
	12	315MI70AI-S	kVA	1/14	642	736	803	875	906	$24,394	LV ALT
			kW		514	589	642	700	725		
	12	315MI70AI-018M	kVA	0/18	642	736	803	875	906	$24,394	LV ALT
			kW		514	589	642	700	725		
	12	315LI90AI-S	kVA	1/14	832	953	1040	1100	1160	$32,684	LV ALT
			kW		666	763	832	880	928		
	12	315LI90AI-0118M	kVA	0/18	832	953	1040	1100	1160	$32,684	LV ALT
			kW		666	763	832	880	928		
	12	355MI70AI-S	kVA	0/18	1120	1283	1400	1450	1520	$44,643	LV ALT
			kW		896	1026	1120	1160	1216		

Modifications

Modifications		Description	List Price USD	Multi. Symbol
E-35	Space heater 120V	160 - 200 models	$350	LV ALT
E-40	Space heater 240V			
E-35	Space heater 120V	250 - 280 models	$425	LV ALT
E-40	Space heater 240V			
E-35	Space heater 120V	315 - 400 models	$450	LV ALT
E-40	Space heater 240V			
PM-10	External PMG	250 models	$1,950	LV ALT
PM-20	External PMG	280 models	$2,025	
PM-20	External PMG	315 - 400 models	$2,450	

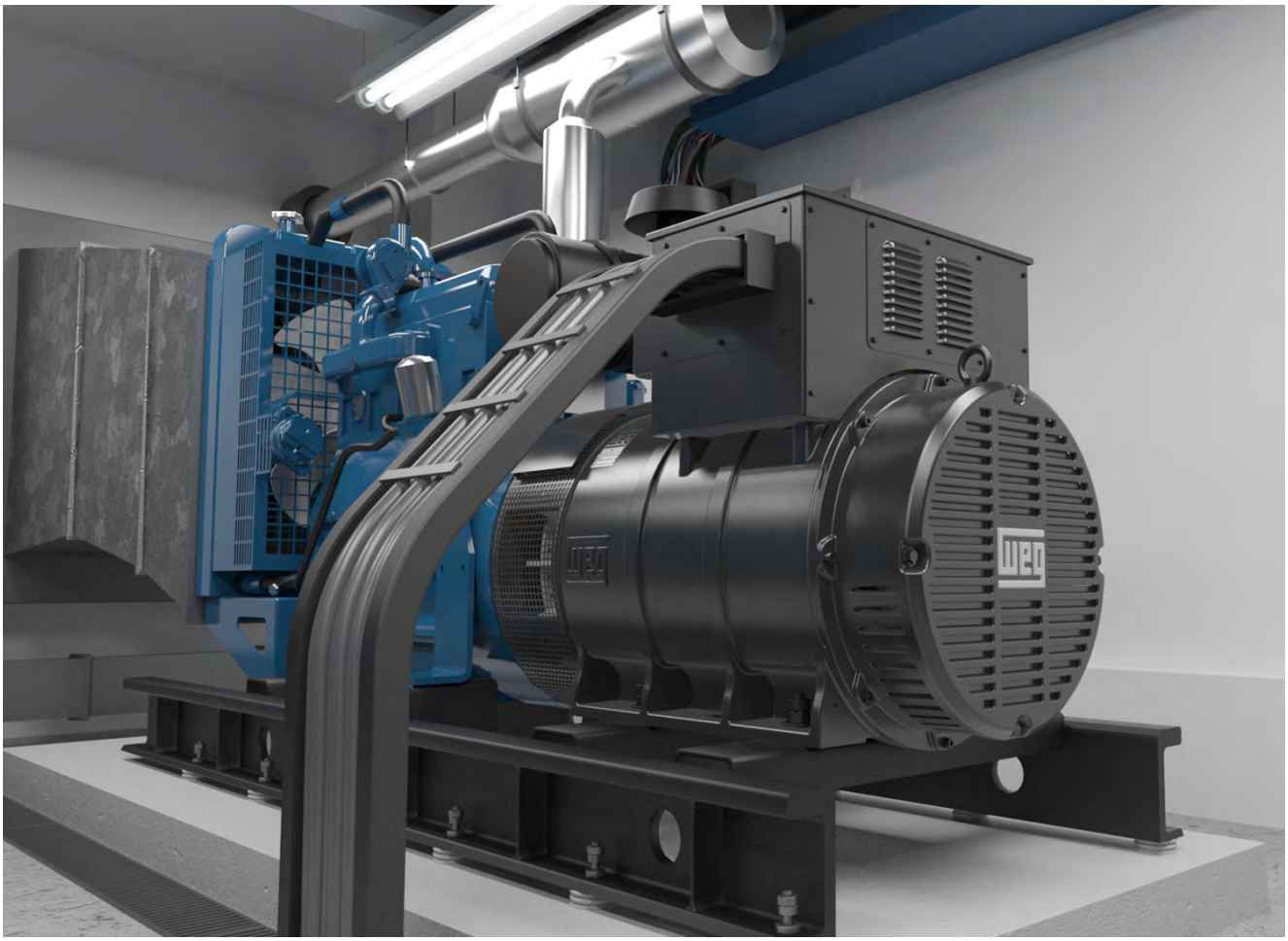

Permanent Magnet DC Motors

NEMA 56 PMDC Motors A-281
NEMA 145TC PMDC Motors A-281
M1600 Permanent Magnet Motor - 2.375” diameter. A-282
M4000 Permanent Magnet Motor - 3.12” diameter A-282
Mechanical Data A-283

Parallel Shaft Gearmotors

GIL 100 Series Gearbox A-284
GIL 200 Series Gearbox A-285

Right Angle Gearmotors

G33 Series Single Worm Reduction A-286

BRUSHES FOR RAE “MT” MOTORS

- List price for one brush. Typically need to replace both brushes at the sametime. Need to order two brushes.

RAE PART NUMBER	MOTOR FRAME SIZE	MOTOR HP RANGE	List Price	Multipiler
MT-56BS	56C	¼ - ½ HP	**$34**	DC1
MT-75BS	56C	¾ - 1 HP	**$34**	DC1
MT-145BS	145C	1.5 – 3 HP	**$41**	DC1

NEMA 56 PMDC Motors

- UL recognized Also CE and RoHs listed.
- Replaceable brushes
- ¼ Hp thru ½ Hp ratings have a 4.45” frame/tube OD
- ¾ Hp and 1.0 Hp ratings have a 4.85” frame/tube OD.
- Optional Low Voltage (12v or 24V), or TENV Enclosed

Catalog Number	HP	Voltage	Current (Amp)	Speed (RPM)	INSUL Class	Torque (In/lbs)	L Max (inches)	List Price	Multiplier
MT-031	0.25	90	2.9	1750	F	9	9.63	**$516**	DC1
MT-041	0.25	180	1.39	1750	F	9	9.63	**$516**	DC1
MT-033	0.33	90	3.7	1750	F	12	9.63	**$563**	DC1
MT-042	0.33	180	1.85	1750	F	12	9.63	**$563**	DC1
MT-032	0.5	90	5.3	1750	F	18	10.24	**$644**	DC1
MT-043	0.5	180	2.78	1750	F	18	10.24	**$644**	DC1
MT-035	0.75	90	7.8	1750	F	27	11.67	**$791**	DC1
MT-044	0.75	180	3.9	1750	F	27	11.67	**$791**	DC1
MT-034	1	90	10.4	1750	F	36	13.05	**$930**	DC1
MT-037	1	180	5.2	1750	F	36	13.05	**$930**	DC1

NEMA 145TC PMDC Motors

- Optional 90V ratings for both 1.5 Hp and 2.0 Hp ratings

Catalog Number	HP	Voltage	Current (Amp)	Speed (RPM)	INSUL Class	Torque (In/lbs)	L Max (inches)	List Price	Multiplier
MT-038	1.5	180	8	1750	F	54	15.6	**$1,151**	DC1
MT-039	2	180	9.5	1750	F	72	16.5	**$2,093**	DC1
MT-040	3	180	14	1750	F	108	18.7	**$2,930**	DC1

NEMA 56 Dimensions

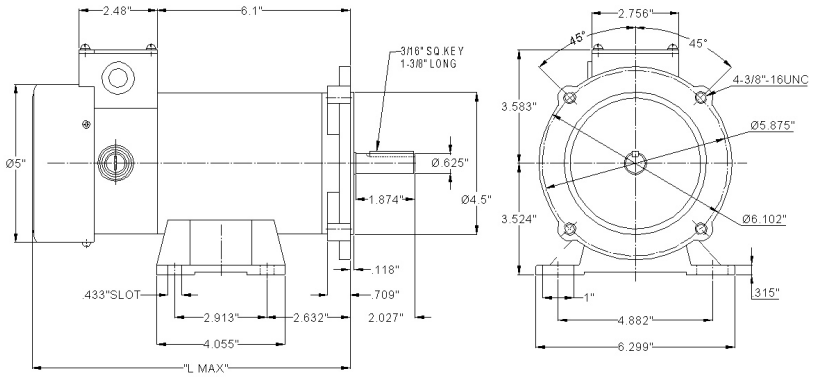

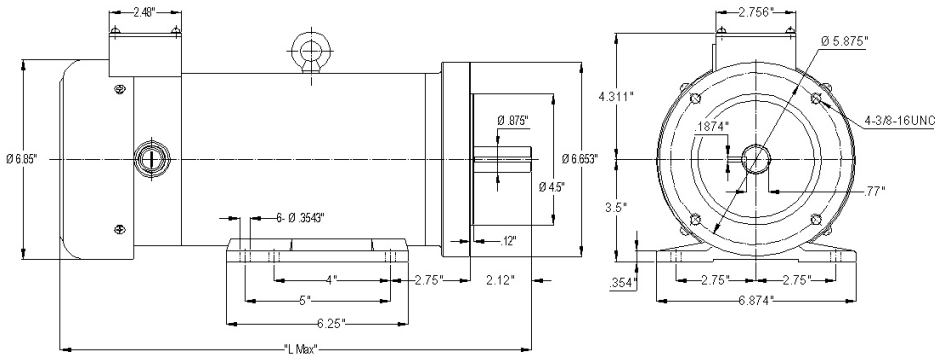

NEMA 145TC Dimensions

For detailed specifications, data sheets, drawings and performance curves visit http://catalog.wegelectric.com

PERMANENT MAGNET DC MOTORS

M1600

The M1600 Series Permanent Magnet Motor features a compact 2.375” diameter design that provides continuous duty torque ratings.

Features

- High Energy Ceramic Magnets
- Double Shielded Ball Bearings
- Dynamically Balanced Armature
- Reversible Design
- 36” Cord
- TENV Design
- Square End Bells
- Externally Replaceable Brushes
- Auto-Hook Tang Type Commutator
- Optional Sleeve Bearings
- Value added options and modifications available
- 1/30 hp up to 1/8 hp
- Speeds up to 5000 rpm
- 12 up to 115 VDC
- 0.312” Maximum Shaft Diameter
- 1.00” Standard Pilot Diameter
- Class “F” Insulation

Catalog Number	Hp	Voltage	RPM	FLA	List Price	Multiplier
MH1601	1/20	90	1800	.61	$258	DC1
ML1601	1/20	12	1800	4.50	$228	DC1

M4000

The M4000 Series Permanent Magnet Motor offers the design engineer a great deal of flexibility in a 3.12”diameter motor. Continuous duty torque rating.

Features

- High Energy Ceramic Magnets
- Double Shielded Ball Bearings
- Dynamically Balanced Armature
- Reversible Design
- 36” Cord
- TENV Design
- Square End Bells
- Externally Replaceable Brushes
- Auto-Hook Tang Type Commutator
- Value added options and modifications available (1/30 hp up to 1/4 hp
- Speeds up to 3500 rpm
- 12 up to 180 VDC
- 0.500” Maximum Shaft Diameter
- 2.015” Standard Pilot Diameter
- Class “F” Insulation

Catalog Number	Hp	Voltage	RPM	FLA	List Price	Multiplier
MH4301	1/8	90	1800	1.30	$337	DC1
MH4401	1/6	90	1800	1.80	$344	DC1
ML4301	1/8	12	1800	10.20	$351	DC1
ML4401	1/6	12	1800	15.20	$372	DC1

M1600 Dimensions

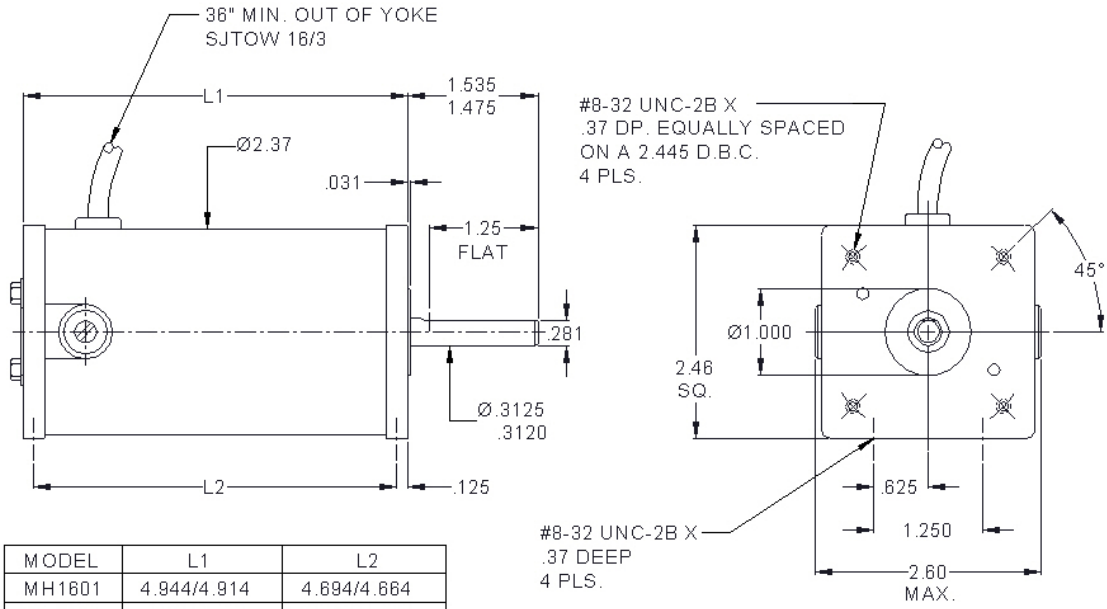

MODEL	L1	L2
MH1601	4.944/4.914	4.694/4.664
ML1601	4.444/4.414	4.194/4.164

M4000 Dimensions

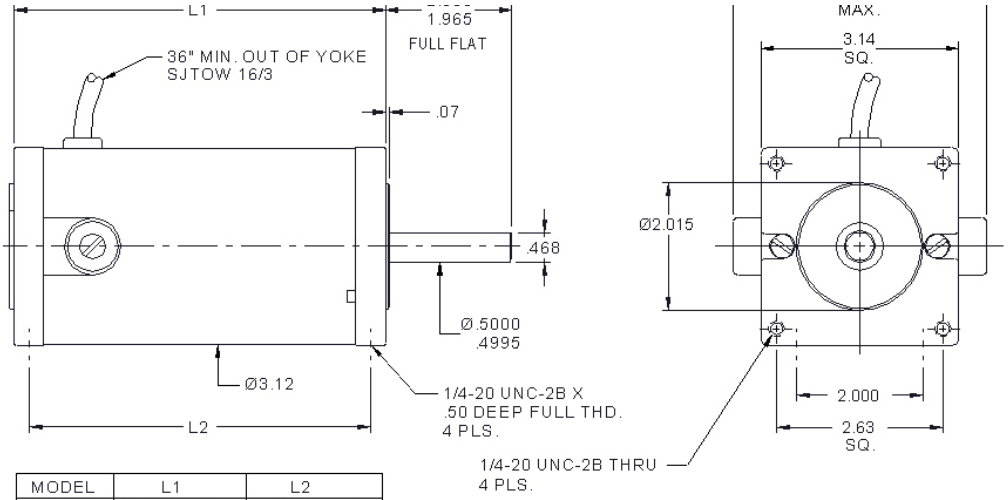

MODEL	L1	L2
MH4301	6.915/6.860	6.457/6.382
MH4401	7.915/7.860	7.457/7.382
ML4301	6.915/6.860	6.457/6.382
ML4401	7.915/7.860	7.457/7.382

PARALLEL SHAFT GEARMOTORS

GIL100 Series

The GL100 Series Gearbox, when matched with the appropriate RAE motor, is a versatile parallel shaft, medium torque gearmotor offering long gear life in a reduced noise design.

Features

- Gearbox Designed to AGMA Standards
- Oil Filled
- Needle Bearings (Gearbox)
- High Energy Ceramic Magnets
- Double Shielded Ball Bearings (Motor)
- Dynamically Balanced Armature
- Reversible Design
- 36" "Cord
- TENV Design
- Externally Replaceable Brushes
- Auto-Hook Tang Type Commutator
- Value Added Options and Modifications Available
- Rating up to 100 in-lbs
- Speeds up to 250 rpm
- 12 up to 115 VDC
- 16:1 up to 488:1 Ratios
- 0.500" Maximum Shaft Diameter
- Class "F" Insulation

Catalog Number	Gearmotor	Hp	Voltage	RPM	FLA	Ratios	FLT in-lbs	List Price	Multiplier
GH1001	Parallel	1/20	90	4	.20	488	100	$470	DC1
GH1002	Parallel	1/20	90	6	.24	340	100	$470	DC1
GH1003	Parallel	1/17	90	10	.30	172	100	$470	DC1
GH1004	Parallel	1/17	90	40	.44	52	50	$460	DC1
GH1005	Parallel	1/17	90	65	.46	31	30	$460	DC1
GH1006	Parallel	1/17	90	90	.46	16	20	$460	DC1

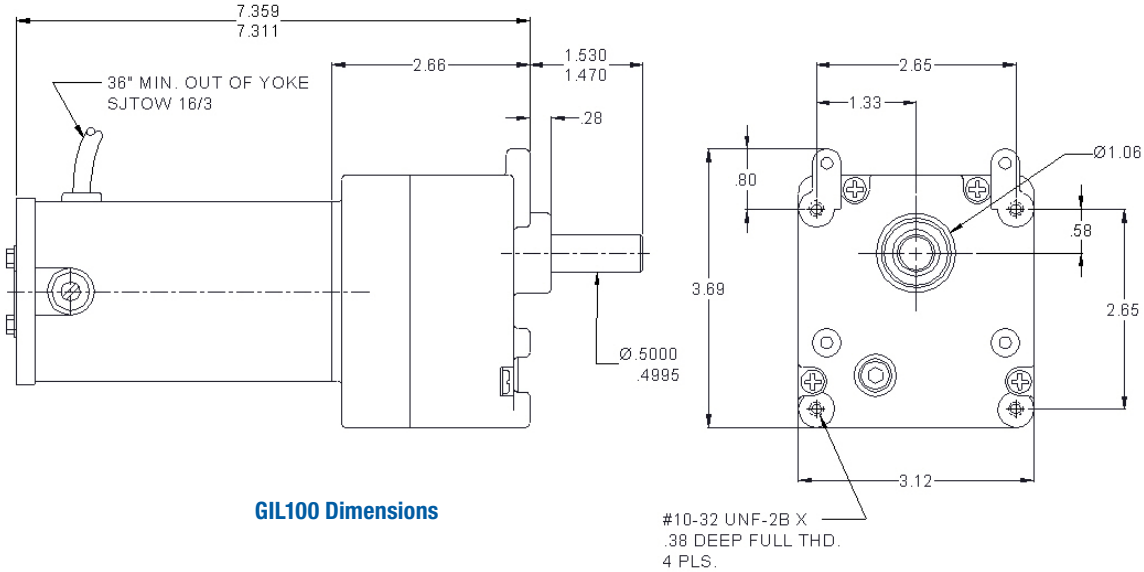

GIL100 Dimensions

For detailed specifications, data sheets, drawings and performance curves visit http://www.weg.net

Data subject to change without notice.

GIL200

The GIL200 Series Gearbox, when matched with the appropriate RAE motor, provides high output torque in a compact, rugged diecast parallel shaft gearmotor design.

Features

- TENV Design
- Gearbox Designed to AGMA Standards
- Oil Lubrication
- Needle Bearings (Gearbox)
- Double Shielded Ball Bearings (Motor)
- Dynamically Balanced Armature
- Reversible Design
- Externally Replaceable Brushes
- Value Added Options and Modifications Available
- Rating up to 300 in-lbs
- 12 up to 180 VDC
- 5:1 up to 343:1 Ratios
- 0.625" Standard Shaft Diameter
- Class "F" Insulation

Catalog Number	Gearmotor	Hp	Voltage	RPM	FLA	Ratios	FLT in-lbs	List Price	Multiplier
GH2001	Parallel	1/20	90	6	0.59	343	290	$651	DC1
GH2002	Parallel	1/20	90	9	0.75	202	268	$651	DC1
GH2003	Parallel	1/20	90	18	0.8	103	150	$651	DC1
GL2001	Parallel	1/20	12	6	3.89	343	290	$656	DC1
GH2004	Parallel	1/8	90	21	1.3	88	280	$656	DC1
GH2005	Parallel	1/8	90	26	1.58	69	280	$663	DC1
GH2006	Parallel	1/8	90	32	1.5	58	220	$663	DC1
GH2007	Parallel	1/8	90	54	1.51	34	138	$663	DC1
GH2008	Parallel	1/8	90	61	1.42	30	113	$653	DC1
GH2009	Parallel	1/8	90	91	1.58	20	86	$653	DC1
GH2010	Parallel	1/8	90	165	1.57	11	47	$653	DC1
GH2011	Parallel	1/8	90	364	1.55	5	21	$667	DC1
GL2002	Parallel	1/8	12	31	12	58	220	$667	DC1
GL2003	Parallel	1/8	12	61	11.4	30	113	$658	DC1
GL2004	Parallel	1/8	12	163	12.6	11	47	$658	DC1

MODEL	L1
GL2001	8.081/8.006
GL2002	10.081/10.006
GL2003	10.081/10.006
GL2004	10.081/10.006
GH2002	8.081/8.006
GH2003	8.081/8.006
GH2004	10.081/10.006
GH2005	10.081/10.006
GH2006	10.081/10.006
GH2007	10.081/10.006
GH2008	10.081/10.006
GH2009	10.081/10.006
GH2010	10.081/10.006
GH2011	10.081/10.006

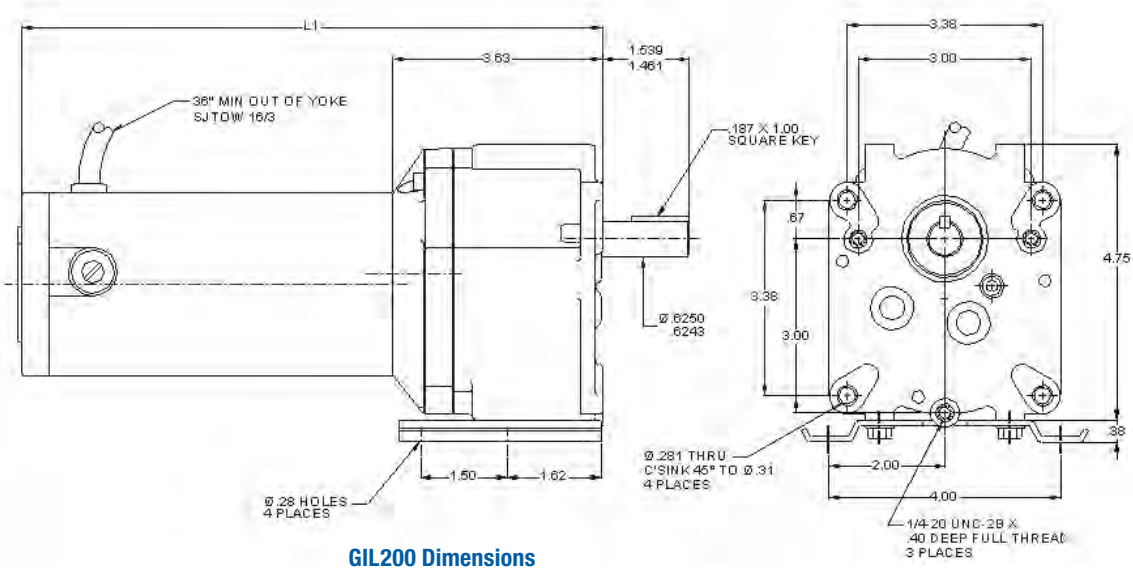

GIL200 Dimensions

For detailed specifications, data sheets, drawings and performance curves visit http://www.weg.net

G33

The G33 Series Single Worm Reduction Right Angle Gearbox, when matched with the appropriate RAE motor: is designed for applications requiring high output torques and a dependable, rugged design.

Features

- Lifetime Oil Lubrication
- Antifriction Bearings
- Foot Mounting
- High Energy Ceramic Magnets
- Dynamically Balanced Armature
- Externally Replaceable Brushes
- Auto-Hook Tang Type Commutator
- Value Added Options and Modifications Available
- Continuous Duty
- Rating up to 175 in- lbs
- Speeds up to 500 rpm
- 12 up to 180 VDC
- 5:1 up to 60:1 Ratios
- 0.625" Maximum Shaft Diameter
- Class "F" Insulation

Catalog Number	Gearmotor	Hp	Voltage	RPM	Ratios	FLA	FLT in-lbs	List Price	Multiplier
GH3301	Rt. Angle	1/8	90	42	60	1.76	88	$581	DC1
GH3302	Rt. Angle	1/8	90	63	40	1.76	69	$581	DC1
GH3303	Rt. Angle	1/8	90	126	20	1.76	43	$581	DC1
GH3304	Rt. Angle	1/8	90	253	10	1.76	24	$581	DC1
GH3305	Rt. Angle	1/8	90	510	5	1.76	13	$581	DC1

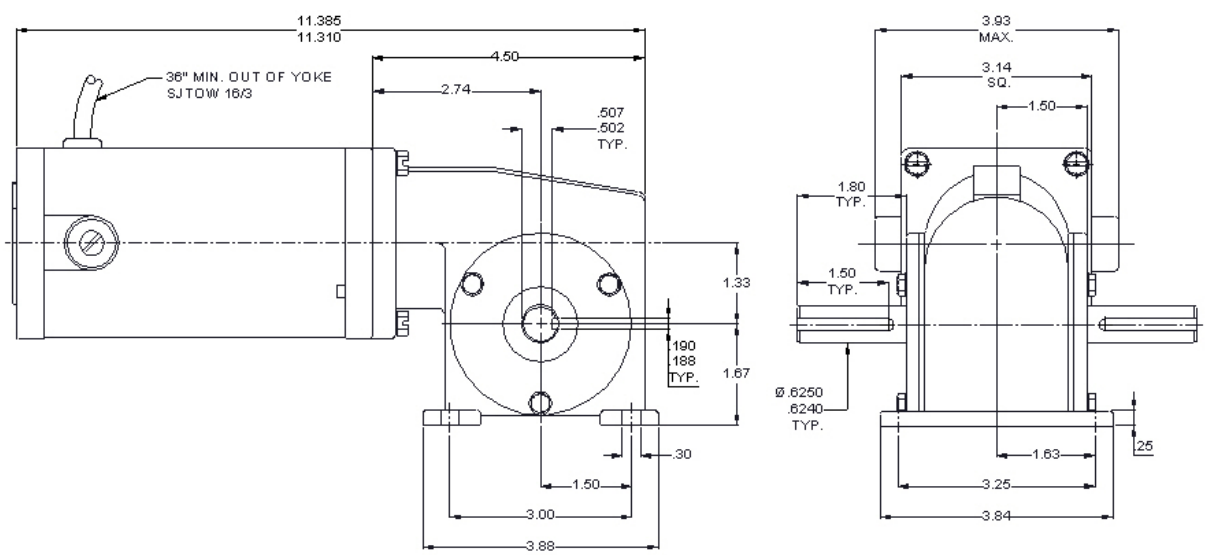

G33 Dimensions

Data subject to change without notice.

How to Order Information A-288
TG-90™ Right Angle Gearmotor A-289
Mechanical Data A-290

WEG's TG Line of right angle gearmotors has been a leading source to the industry for over 60 years. Designed for reliability and long life, the TG-90 comes in a variety of power ranges and center distances. Our robust design is precision engineered and manufactured to fit a variety of applications. Ideal for use on conveyors, material handling, packaging machinery, lift gates and hoists, and many others, the TG-90 proves to be a versatile choice for your gearing needs.

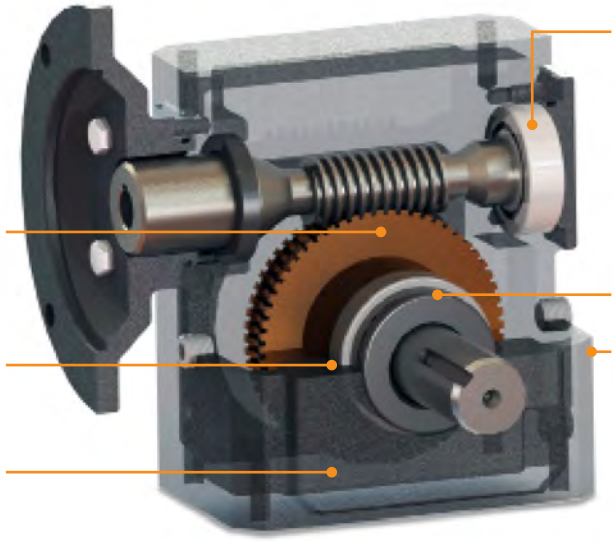

Features:

- Grey Iron right angle worm-gear reducer construction
- Forged manganese bronze worm gear for added strength
- Oversized high-speed input bearing to withstand high shock loads
- Tapered roller bearings to withstand high overhung and thrust loads
- Specially designed double lip seals reduce oil leakage
- High capacity oil reservoir for guaranteed cool operation
- Max Output torques from 400 in. lbs. to 1435 in. lbs.
- 1.0 Service Factor
- Available in 56C, 143TC quill or solid shaft input mounting
- Eight gear ratios available from 5:1 to 60:1
- Select from single, double, or hollow output shaft options
- Left, right, or bottom mounting

C-Face Input/Shaft Output

C-Face or Shaft Input/
Hollow Bore Output

Shaft Input/Shaft Output

MODEL ORDERING NOMENCLATURE INFORMATION

OUTPUT SHAFT

STYLE	SIZE	RATIO	ORIENTATION	MOTOR MOUNT	LUBRICATION	VENT
TQ - Quill Input	15 - 1.54” CD	5	L - Left Hand	56 -56C	N - No Oil	N - No Pressure Relief
TS- Shaft Input	18 - 1.75” CD	10	R - Right Hand	140 - 143-5TC	S - Synthetic	P - Pressure Relief
	21 - 2.06” CD	15	D - Double		L - Lube for Life	
	24 -2.37” CD	20	H - Hollow			
		30				
		40				
		50				
		60				
TQ	**21**	**60**	**L**	**56**	**S**	**P**

Model	Output Shaft Diameter	Single Output Shaft Max. Over-hung Load	Dual Output Shaft Max. Over-hung Load	Single Hollow Output Max. Over-hung Load	Dual Hollow Output Max. Over-hung Load	Dual Hollow Output Max. Overhung Load
T15	.75”	1542	771	1472	736	736
T18	.875”	2075	1030	1400	700	700
T21	1.0”	1600	800	1100	550	550
T24	1.125”	1700	850	2100	1050	1050

Data subject to change without notice.

Nominal Output RPM @ 1750 RPM In	Gear Ratio	Continuous Duty Output Torque (In-Lbs) Based on 1750 RPM Motor									Max Input HP	Max Output Torque Rating In-Lbs	NEMA Motor Mount	Catalog Number	List Price	Multi. Symbol
		0.25	0.33	0.5	0.75	1	1.5	2	3	5						
350	5:1					167	250	334			2.59	432	140TC	TQ155L140SP	$481	TG
						167	251	335			2.63	440	140TC	TQ185L140SP	$498	TG
							252	336	504		3.66	615	140TC	TQ215L140SP	$551	TG
								336	505	841	5.35	900	140TC	TQ245I140SP	$674	TG
175	10:1				240	321	481				1.94	622	140TC	TQ1510L140SP	$472	TG
					240	321	481				1.94	622	140TC	TQ1510R140SP	$472	TG
					245	327	491				1.62	530	140TC	TQ1810L140SP	$488	TG
					245	327	491				1.62	530	140TC	TQ1810R140SP	$488	TG
						327	490	653			2.48	810	140TC	TQ2110L140SP	$551	TG
						327	490	653			2.48	810	140TC	TQ2110R140SP	$551	TG
							492	656	985		3.58	1175	140TC	TQ2410L140SP	$640	TG
							492	656	985		3.58	1175	140TC	TQ2410R140SP	$640	TG
117	15:1			230	345	460					1.45	667	56C	TQ1515L56SP	$467	TG
				236	353	471					1.22	575	56C	TQ1815L56SP	$484	TG
					355	474	711				1.9	900	56C	TQ2115L56SP	$533	TG
						475	712	950			2.78	1320	56C	TQ2415L56SP	$674	TG
88	20:1			294	442	589					1.16	683	56C	TQ1520L56SP	$465	TG
				294	442	589					1.16	683	56C	TQ1520R56SP	$465	TG
				303	454	606					1.04	630	56C	TQ1820L56SP	$479	TG
				303	454	606					1.04	630	56C	TQ1820R56SP	$479	TG
					455	607	910				1.59	965	56C	TQ2120L56SP	$581	TG
					455	607	910				1.59	965	56C	TQ2120R56SP	$581	TG
						612	917	1223			2.33	1425	56C	TQ2420L56SP	$674	TG
						612	917	1223			2.33	1425	56C	TQ2420R56SP	$674	TG
44	40:1	250	330	500							0.68	680	56C	TQ1540L56SP	$488	TG
		250	330	500							0.68	680	56C	TQ1540R56SP	$488	TG
		265	349	529							0.6	635	56C	TQ1840L56SP	$500	TG
		265	349	529							0.6	635	56C	TQ1840R56SP	$500	TG
			350	530	795						0.92	975	56C	TQ2140L56SP	$570	TG
			350	530	795						0.92	975	56C	TQ2140R56SP	$570	TG
				535	803	1071					1.34	1435	56C	TQ2440L56SP	$674	TG
				535	803	1071					1.34	1435	56C	TQ2440R56SP	$674	TG
29	60:1	324	428								0.48	623	56C	TQ1560L56SP	$465	TG
		324	428								0.48	623	56C	TQ1560R56SP	$465	TG
		347	458								0.45	625	56C	TQ1860L56SP	$500	TG
		347	458								0.45	625	56C	TQ1860R56SP	$500	TG
		351	463	701							0.67	940	56C	TQ2160L56SP	$570	TG
		351	463	701							0.67	940	56C	TQ2160R56SP	$570	TG
			473	717	1076						0.99	1420	56C	TQ2460L56SP	$698	TG
			473	717	1076						0.99	1420	56C	TQ2460R56SP	$698	TG

1) All data is operating based on a 1.0 Service Factor with a 1750 RPM input speed.

TQ18 Dimensions

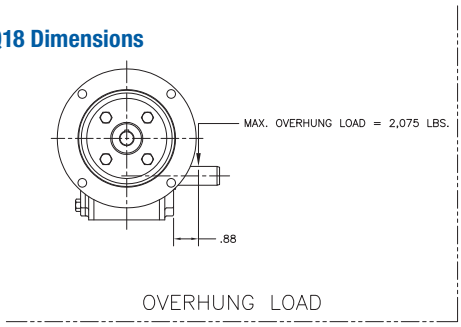

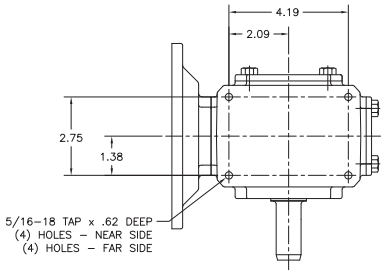

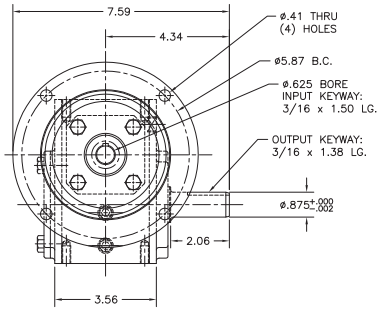

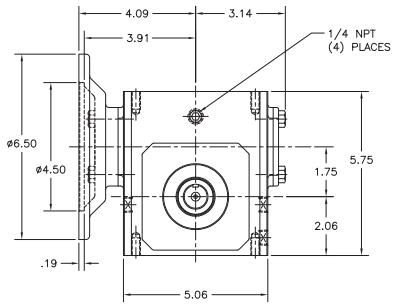

SURFACE FINISH (UNLESS OTHERWISE INDICATED) 125 BREAK ALL SHARP CORNERS	TOLEDO GEARMOTOR CO.
	T18 REDUCER
	OUTLINE
TOLERANCE (UNLESS OTHERWISE INDICATED) 3 PLACE DEC. ±.005 2 PLACE DEC. ±.010 ANGLES ± 1/2°	SCALE: 1/2 PART NO.:
	DATE: 03/24/15 DRWN BY: PA/MW
	DRAWING NO. TQ18 OUTLINE REV

TQ21 Dimensions

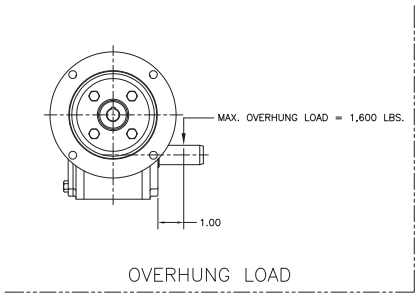

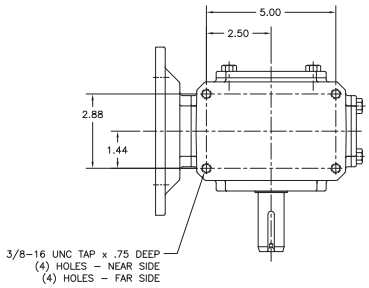

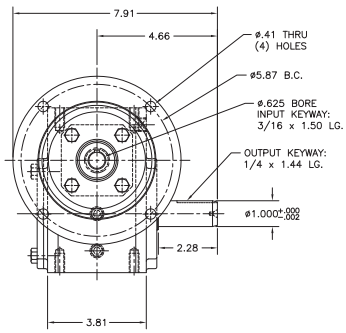

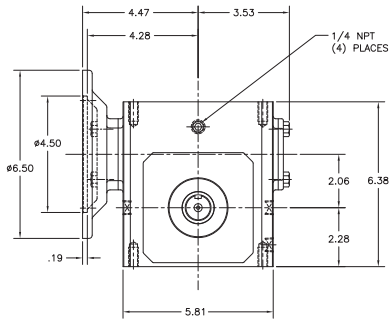

SURFACE FINISH (UNLESS OTHERWISE INDICATED) 125 BREAK ALL SHARP CORNERS	TOLEDO GEARMOTOR CO.
	T21 REDUCER
	OUTLINE
TOLERANCE (UNLESS OTHERWISE INDICATED) 3 PLACE DEC. ±.005 2 PLACE DEC. ±.010 ANGLES ± 1/2°	SCALE: 1/2 PART NO.:
	DATE: 03/24/15 DRWN BY: PA/MW
	DRAWING NO. TQ21 OUTLINE REV

Data subject to change without notice.

TQ24 Dimensions

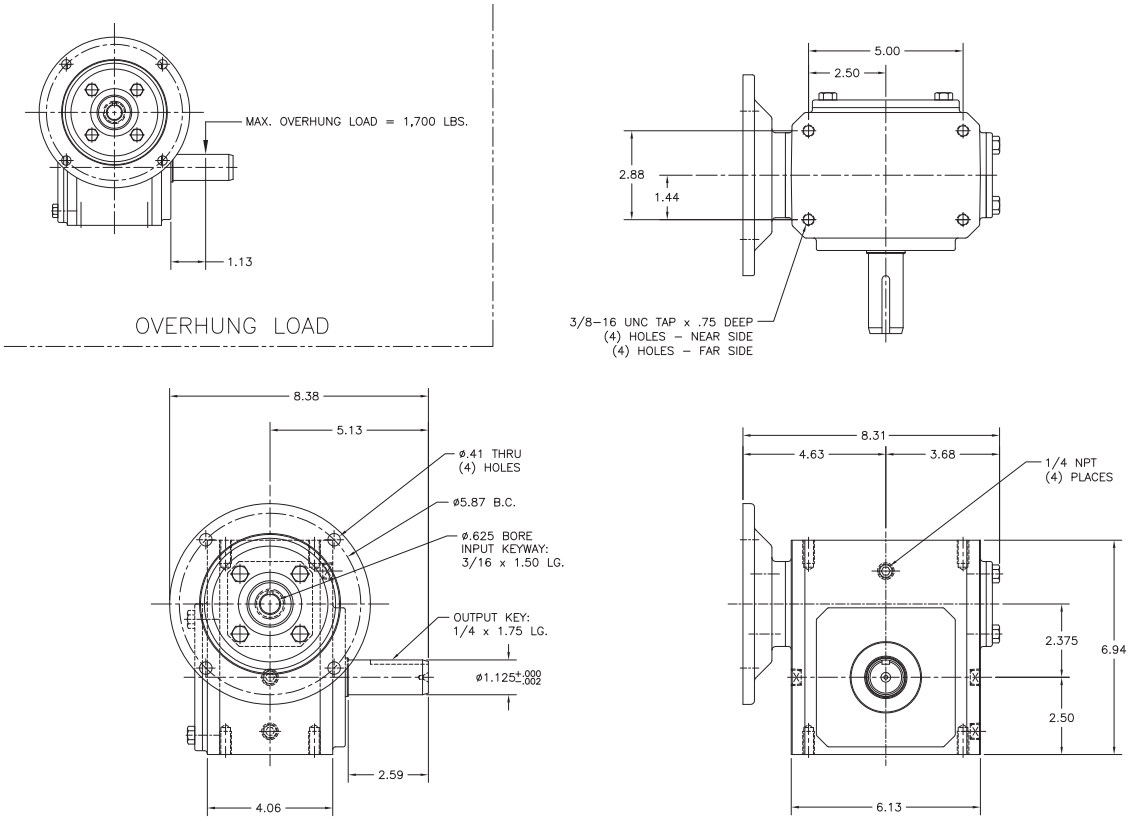

	TOLEDO GEARMOTOR CO.
SURFACE FINISH (UNLESS OTHERWISE INDICATED) 125 BREAK ALL SHARP CORNERS	T24 REDUCER
	OUTLINE
TOLERANCE (UNLESS OTHERWISE INDICATED) 3 PLACE DEC. ±.005 2 PLACE DEC. ±.010 ANGLES ± 1/2°	SCALE: 1/2 · PART NO.: · DATE: 03/24/15 · DRWN BY: PA/MW · DRAWING NO. TQ24 OUTLINE · REV

(for full line of products see WEG's Automation Catalogs)

CFW300 Variable Frequency Drive. A-301
CFW500 Variable Frequency Drive. A-306
CFW700 Variable Frequency Drive. A-313
CFW08 Wash - Washdown Duty VFD A-321
EDP11 - Enclosed VFD Panel. A-329
EDP11 - Enclosed VFD Panel - Dimensions A-337
GPH2 - Combination Soft Starter A-341
GPH2 - Combination Soft Starter - Dimensions A-345
ESW Non-Combination Across the Line Starters - Enclosure Type 1. . . . . A-351
ESWS Starters and Field Mod Kits. A-352
ESW Wiring Diagram and Dimensions A-354
PESW Non-Combination Across the Line Starters - Enclosure Type 4X. A-356
PESW Wiring Diagram and Dimensions A-359
ESWC Combination Type-C Across the Line Starter without CPT A-362
ESWC Combination Type-C Across the Line Starter with CPT. A-363
ESWE Combination Type-E Across the Line Starter Enclosure Type 4X - without CPT. A-364
ESWE Combination Type-E Across the Line Starter Enclosure Type 4X - with CPT A-364
ESWF Combination Type-F Across the Line Starter Enclosure Type 4/12 - without CPT A-365
ESWF Combination Type-F Across the Line Starter Enclosure Type 4/12 - with CPT. A-366
Dimensional Data A-367
ESWX-M16 Series Explosion Proof Manual Motor Starters. A-370
ESWX-M25 Series Explosion Proof Manual Motor Starters. A-371
ESWX-M65 Series Explosion Proof Manual Motor Starters. A-371
ESWX-M100 Series Explosion Proof Manual Motor Starters. A-371
Accessories A-372
ESWX NEMA 7/9 Series Explosion Proof Manual Motor Starters. A-373
ESWX Dimensional Data A-374
Custom Control Panels Data Worksheet and Request for Quote A-377

Medium Voltage Starters

SSW7000 - 2300V and 4160V A-380
SSW7000 Options. A-381
SSW7000 Dimensions A-381
SSW7000 Technical Data A-383

Data subject to change without notice.

CFW300

The CFW300 variable frequency drive is a high-performance VFD for three-phase induction motors. It is ideal for applications on machines or equipment that require precise control with easy setup and operation.

The CFW300 features a compact size with contactor-style electrical connections (top in / bottom out). The VFD's performance can be scaled to match the application by selecting WEG vector control (VVW) or scalar control (V/F). The CFW300 includes built-in operator interface (HMI) and SoftPLC with free WPS programming software for custom tailored control schemes. A variety of plug-in option modules for additional I/O and communications protocols may be added to provide extended capabilities, making the CFW300 a flexible and cost effective solution for your variable speed requirements.

Standard Features

- Single and three-phase voltage supply
- Din rail or surface mounting with screws
- Voltage range: • 110-127 Vac and 200-240 Vac for single-phase models
- 200-240 Vac for three-phase models
- Current / Power range: up to 15.2 Amps / 3.7 kW (5 HP)
- Control mode: Scalar (V/Hz) or Voltage Vector (VVW)
- Switching frequency: 2.5, 5, 10 or 15kHz
- Overload capacity: 150% for 60 sec. every 10min, 200% for 3 sec. every 10min.
- Degree of protection: IP20
- Operating temperature: 14 • 122°F (50°C); up to 140°F (60°C) with current derating (2% per 1°C above 50°C)
- Altitude: 0 • 3300 ft. (1000m); up to 13,200 ft. (4000m) with current derating (1% per100m above 1000m)
- Humidity: 5 to 95% non-condensing
- Integrated brake chopper for frame size B (not available for size A)
- Local keypad supplied as standard

Applications

- Centrifugal pumps
- Fans / Blowers
- Blenders / Mixers
- Centrifuges
- Compressors
- Conveyors
- Roller Tables
- Granulators
- Commercial Dryers
- Rotary Filters

CFW300 Catalog Number Sequence

CFW300	A	02P6	S	2	NB	20

Frame

A or B

Rated Current

01P6 = 1.6 Amps
02P6 = 2.6 Amps
04P2 = 4.2 Amps
06P0 = 6.0 Amps
07P3 = 7.3 Amps
10P0 = 10.0 Amps
15P2 = 15.2 Amps

Options

NB = No Brake
DB = Dynamic Brake
20 = IP20 (Std.)

Supply Voltage

1 = 110-127 Vac
2 = 200-240 Vac

Supply Phases

S = Single Phase
B = 1 or 3 Phase
T = Three Phase

Data subject to change without notice.

IP20 Enclosure

Motor Voltage	Motor HP [1]	Drive Output Amps [2]	Catalog Number	Braking Transistor	Frame Size	Dimensions (in.) HxWxD	Approx. Weight Lbs. (kG)	List Price	Multiplier Symbol
230 Vac / 3 Phase	**Input Power Supply: Single-Phase 110-127 Vac**								
	1/4 or 1/3	1.6	CFW300A01P6S1NB20	No	A	6.3 x 2.8 x 5.9	2.0 (0.9)	$361	V1
	3/4	2.6	CFW300A02P6S1NB20	No	A	6.3 x 2.8 x 5.9	2.0 (0.9)	$394	V1
	1	4.2	CFW300A04P2S1NB20	No	A	6.3 x 2.8 x 5.9	2.0 (0.9)	$420	V1
	2	6.0	CFW300A06P0S1NB20	No	A	6.3 x 2.8 x 5.9	2.0 (0.9)	$507	V1
	Input Power Supply: Single-Phase 200-240 Vac								
	1/4 or 1/3	1.6	CFW300A01P6S2NB20	No	A	6.3 x 2.8 x 5.9	2.0 (0.9)	$323	V1
	3/4	2.6	CFW300A02P6S2NB20	No	A	6.3 x 2.8 x 5.9	2.0 (0.9)	$348	V1
	1	4.2	CFW300A04P2S2NB20	No	A	6.3 x 2.8 x 5.9	2.0 (0.9)	$371	V1
	2	6.0	CFW300A06P0S2NB20	No	A	6.3 x 2.8 x 5.9	2.0 (0.9)	$461	V1
	2	7.3	CFW300A07P3S2NB20	No	A	6.3 x 2.8 x 5.9	2.0 (0.9)	$543	V1
	3	10.0	CFW300B10P0B2DB20 [3]	Yes	B	8.1 x 2.8 x 6.3	3.0 (1.4)	$648	V1
	Input Power Supply: Three-Phase 200-240 Vac								
	1/4 or 1/3	1.6	CFW300A01P6T2NB20	No	A	6.3 x 2.8 x 5.9	2.0 (0.9)	$343	V1
	3/4	2.6	CFW300A02P6T2NB20	No	A	6.3 x 2.8 x 5.9	2.0 (0.9)	$376	V1
	1	4.2	CFW300A04P2T2NB20	No	A	6.3 x 2.8 x 5.9	2.0 (0.9)	$399	V1
	2	6.0	CFW300A06P0T2NB20	No	A	6.3 x 2.8 x 5.9	2.0 (0.9)	$484	V1
	2	7.3	CFW300A07P3T2NB20	No	A	6.3 x 2.8 x 5.9	2.0 (0.9)	$571	V1
	3	10.0	CFW300B10P0B2DB20 [3]	Yes	B	8.1 x 2.8 x 6.3	3.0 (1.4)	$648	V1
	5	15.2	CFW300B15P2T2DB20	Yes	B	8.1 x 2.8 x 6.3	3.0 (1.4)	$792	V1

Notes:
1) "HP" rating based on "average FLA values". Use as a guide only.
2) Motor FLA may vary with speed and manufacturer. ALWAYS compare motor FLA to Nominal AMPS of drive.
3) CFW300B10P0B2DB20 is capable of Single-Phase input without derating.
For other technical data please refer to WEG product manual.

Options and Accessories[1]

Type	CATALOG NUMBER	Description	Approx. Wt. (lbs.)	List Price	Multi-plier Symbol
I/O [2]	CFW300-IOAR	I/O Expansion Module; 1 AI, 1 AO, 3 DOR, +10vdc	0.2	$141	V1
I/O [2]	CFW300-IODR	I/O Expansion Module; 4 DI, 3 DOR	0.2	$108	V1
I/O [2]	CFW300-IOAENC	I/O and Encoder Module; 1 AI, 2 AO, +10vdc, 1 Incremental Encoder Input, +5vdc	0.2	$143	V1
I/O [2]	CFW300-IOADR	I/O Expansion Module; 1 NTC Sensor Input, 3 DOR	0.2	$207	V1
RS485 Card	CFW300-CRS485	RS-485 Module; 1 RS-485 Input (Modbus-RTU), 1 Mini USB for Remote Keypad	0.2	$82	V1
USB Card	CFW300-CUSB	USB Communication Module w/ 2-meter Cable; 1 Mini USB	0.2	$87	V1
RS232 Card	CFW300-CRS232	RS-232 Communication Module (Modbus-RTU); 1 RS232	0.2	$82	V1
CANopen Card	CFW300-CCAN	CANopen/DeviceNet Comm. Module; 1 CAN/DeviceNet, External 24vdc Power	0.2	$100	V1
Profibus DP Card	CFW300-CPDP	Profibus DP Communication Module; 1 Profibus DP 9-Pin Connector	0.2	$294	V1
Remote Keypad	CFW300-KHMIR	Remote Keypad; Includes CFW300-CRS485 and 3-meter Cable	0.4	$256	V1
Flash Memory Module	CFW300-MMF	Flash Memory Module for saving program and parameters to/from drive.	0.2	$210	V1
RFI Filter Kit – Fr. A	CFW300-KFA	CFW300 RFI Filter Kit – Frame Size A - SINGLE PHASE INPUT MODELS ONLY	0.3	$90	V1
RFI Filter Kit – Fr. B	CFW300-KFB	CFW300 RFI Filter Kit – Frame Size B - SINGLE PHASE INPUT MODELS ONLY	0.3	$105	V1

Notes:
1) Up to Qty. (1) I/O Expansion Module plus Qty. (1) Communication Module can be added to the CFW300 VFD.
2) Option card I/O is in addition the standard CFW300 I/O which includes: 4 DI, 1 AI, 1 DOR.

Option Card and I/O Table

CFW 300 Option Modules	DI [1]	AI	AO	DOR	Encoder	Infrared	RS485	RS232	USB	CANopen	Profibus-DP
CFW300-IOAR	4	1	1	3							
CFW300-IODR	4 + 4			3							
CFW300-IOAENC	4	1	2		1						
CFW300-IOADR	4	1		3		1					
CFW300-CRS485	4						1				
CFW300-CRS232	4							1			
CFW300-CUSB	4								1		
CFW300-CCAN	4									1	
CFW300-CPDP											1

Notes: 1) CFW300 Drive includes 4DI as standard. Option Modules provide suplimental I/O as shown in this table.

Dimensions

Rear view

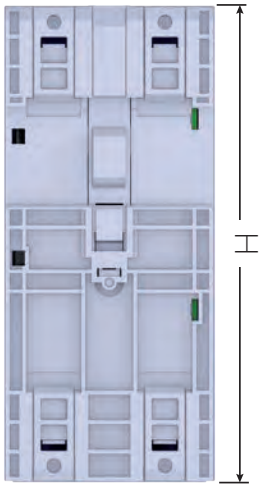

Front view

Side View

Frame Size IP20	Height in. (mm)	Width in. (mm)	Depth in. (mm)	Weight Lbs. (kG)
A (w/o RFI)	6.3 (157.9)	2.8 (70.0)	5.9 (148.4)	2.0 (0.9)
A (w/RFI)	7.8 (196.0)	2.8 (70.0)	7.5 (190.1)	2.9 (1.3)
B (w/o RFI)	8.1 (198.9)	2.8 (70.0)	6.3 (158.4)	3.0 (1.4)
B (w/ RFI)	9.4 (237.0)	2.8 (70.0)	7.9 (200.1)	4.0 (1.8)

Data subject to change without notice.

Technical Data

Power Supply	Voltage	Single Phase	110-127 Vac (+10%, -15%)
		Single Phase or Three Phase	200-240 Vac (+10%, -15%)
	Frequency	50 / 60Hz +/- 2Hz	
Output	Voltage	0-230 Vac Three Phase	
	Frequency	0-400 Hz, 0.1Hz Resolution	
Control	Control Modes	Volts per Hertz (Scalar)	
		Sensorless Voltage Vector	
		Sinusoidal PWM (Space Vector Modulation)	
	Switching Frequency	2.5, 5, 10 or 15kHz	
	Frequency Range	0-400 Hz	
	Overload Capacity	150% for 60 seconds, repeatable every 10 min.	
Control Inputs	4 programmable isolated digital inputs, NPN or 24Vdc logic (PNP)		
	1 programmable differential analog input; programmable for current or voltage		
Control Outputs	1 programmable relay output: One NO/NC (Form C) 250 Vac / 0.5 A		
Communication	Field Bus	Optional modules for RS-485, RS-232, CANopen, DeviceNet, Profibus-DP, USB	
Safety	Protections	Motor over current	DC link over voltage
		Motor overload	DC link under voltage
		Output phase-to-phase short circuit	Drive over temperature
		Output phase-to-ground short circuit	External fault
		Programming error	
Enclosure	Degree of Protection	IP20	
	Mounting	Surface mounting with screws or DIN rail mounting	
Ambient	Temperature	14 - 122°F (50°C), up to 140°F (60°C) with 2% / 1.8°F (1°C) output current derating	
	Humidity	5-95% Non Condensing	
	Altitude	0-3300 ft (1000m) Up to 13,200 ft (4000m) with 1% / 330ft (100m) output current derating	
Regulatory Conformance	EMC Directive 89 / 336 / EEC	Electromagnetic compatibility – Industrial Environment EMC Emission and Immunity with optional filter	
	ENC61800-2, 3, 5-1 ENC61800-4-2, 3, 4, 5, 6		
	LVD 73/23/EEC	Low Voltage Directive	
	UL 508C, UL 840, UL 50	Electrical Equipment standards	
Special Functions	Linear and "S" ramp accel and decel, local/remote control, FWD/REV selection, DC braking, manual and auto torque boost, motor slip compensation, electronic pot, two skip frequencies, maximum and minimum adjustable frequency limits, adjustable output current		
Keypad	4 digit LCD display and 4 keys		
	Readouts for: output frequency (Hz), output current (A), output voltage (V), motor torque (%) in vector mode, DC bus voltage (V), value proportional to frequency (Ex.: RPM), fault and status messages		

CFW500

Developed for fast commissioning, the CFW500 VFD is perfect for machines. Extremely compact and cost-effective, it meets the needs of machine manufacturers, system integrators, panel installers and users. The CFW500 has advanced technology plug and play options, developed for fast commissioning, providing great flexibility and competitive advantage while offering excellent performance and reliability. Designed for exclusively industrial or professional use, perfect for OEM, system integrators, panel installers and End Users providing great benefit from the added value.

Standard Features

- Compatible - wide range of accessories
- Single and Three phase input voltage
- 200 - 240v, 380 - 480v or 500 - 600v in put range
- v/hz and sensorless vector control
- Flexible - application functions
- Robust - 150% overload for one minute
- Efficient - provides optimal speed for production
- Reliable - 100% are tested with rated load at the factory
- Integrable - Fieldbus networks

IP20

NEMA1

Applications

- Centrifugal pumps
- Compressors
- Process dosing pumps
- Fans/ventilators
- Mixers/blenders
- Commercial dryers
- Extruders
- Conveyor belts
- Elevators
- General machinery

Data subject to change without notice.

CFW500 Catalog Number Sequence

CFW500	A	02P6	B	2	NB	N1

Frame

A, B, C, D

Rated Current

02P6 = 2.6 Amps
06P1 = 6.1 Amps
07P3 = 7.3 Amps
10P0 = 10 Amps
24P0 = 24 Amps
33P0 = 33 Amps
47P0 = 47 Amps

Options

NB = No Brake
DB = Dynamic Brake
N1 = NEMA1 (Std.)
20 = IP20
C2 = RFI Filter
C3 = RFI Filter

Supply Voltage

2 = 200-240 Vac
4 = 380-480 Vac
5 = 500-600 Vac

Supply Phases

S = Single Phase
B =1 or 3 Phase
T = Three Phase

Table intended as reference and not to create part numbers.

CFW500

IP20 Finger Safe Enclosure

Motor Voltage	Motor HP [1]	Drive Amps [2]	Catalog Number	Braking Transistor	Frame Size	Dimensions (in.) HxWxD	Approx. Weight (lbs.)	List Price	Multiplier
230 Vac/3 Phase	**Input Power Supply: Single-Phase 200-240 Vac**								
	1/3	1.6	CFW500A01P6S2NB20	No	A	7.5 x 3.0 x 5.9	1.8	$451	V1
	3/4	2.6	CFW500A02P6S2NB20	No	A	7.5 x 3.0 x 5.9	1.8	$463	V1
	1 1/2	4.3	CFW500A04P3S2NB20	No	A	7.5 x 3.0 x 5.9	1.8	$499	V1
	2	7.3	CFW500A07P0S2NB20	No	A	7.5 x 3.0 x 5.9	1.8	$633	V1
	Input Power Supply: Single or Three-Phase 200-240 Vac								
	1/3	1.6	CFW500A01P6B2NB20	No	A	7.5 x 3.0 x 5.9	1.8	$456	V1
	3/4	2.6	CFW500A02P6B2NB20	No	A	7.5 x 3.0 x 5.9	1.8	$467	V1
	1 1/2	4.3	CFW500A04P3B2NB20	No	A	7.5 x 3.0 x 5.9	1.8	$506	V1
	2	7.3	CFW500B07P3B2DB20	Yes	B	7.9 x 4.0 x 6.3	2.6	$678	V1
	3	10.0	CFW500B10P0B2DB20	Yes	B	7.9 x 4.0 x 6.3	2.6	$789	V1
	Input Power Supply: Three-Phase 200-240 Vac								
	2	7.0	CFW500A07P0T2NB20	No	A	7.5 x 3.0 x 5.9	1.8	$628	V1
	3	9.6	CFW500A09P6T2NB20	No	A	7.5 x 3.0 x 5.9	1.8	$773	V1
	5	16	CFW500B16P0T2DB20	Yes	B	7.9 x 4.0 x 6.3	2.6	$842	V1
	7 1/2	24	CFW500C24P0T2DB20	Yes	C	8.3 x 5.3 x 6.5	4.4	$1,427	V1
	10	28	CFW500D28P0T2DB20	Yes	D	12.1 x 7.1 x 6.6	9.5	$1,777	V1
	10	33	CFW500D33P0T2DB20	Yes	D	12.1 x 7.1 x 6.6	9.5	$2,146	V1
	15	47	CFW500D47P0T2DB20	Yes	D	12.1 x 7.1 x 6.6	9.5	$2,910	V1
	20	56	CFW500E56P0T2DB20	Yes	E	13.8 x 8.7 x 7.6	22.1	$3,380	V1
460 Vac/3 Phase	**Input Power Supply: Three-Phase 380-480 Vac**								
	1/2	1.0	CFW500A01P0T4NB20	No	A	7.5 x 3.0 x 5.9	1.8	$582	V1
	1	1.6	CFW500A01P6T4NB20	No	A	7.5 x 3.0 x 5.9	1.8	$604	V1
	2	2.6	CFW500A02P6T4NB20	No	A	7.5 x 3.0 x 5.9	1.8	$649	V1
	3	4.3	CFW500A04P3T4NB20	No	A	7.5 x 3.0 x 5.9	1.8	$799	V1
	3	6.1	CFW500A06P1T4NB20	No	A	7.5 x 3.0 x 5.9	1.8	$982	V1
	2	2.6	CFW500B02P6T4DB20	Yes	B	7.9 x 4.0 x 6.3	2.6	$708	V1
	3	4.3	CFW500B04P3T4DB20	Yes	B	7.9 x 4.0 x 6.3	2.6	$892	V1
	5	6.5	CFW500B06P5T4DB20	Yes	B	7.9 x 4.0 x 6.3	2.6	$1,067	V1
	7 1/2	10	CFW500B10P0T4DB20	Yes	B	7.9 x 4.0 x 6.3	2.6	$1,207	V1
	10	14	CFW500C14P0T4DB20	Yes	C	8.3 x 5.3 x 6.5	4.4	$1,495	V1
	10	16	CFW500C16P0T4DB20	Yes	C	8.3 x 5.3 x 6.5	4.4	$1,684	V1
	15	24	CFW500D24P0T4DB20	Yes	D	12.1 x 7.1 x 6.6	9.5	$2,229	V1
	25	31	CFW500D31P0T4DB20	Yes	D	12.1 x 7.1 x 6.6	9.5	$2,783	V1
	30	39	CFW500E39P0T4DB20	Yes	E	13.8 x 8.7 x 7.6	22.1	$3,346	V1
	40	49	CFW500E49P0T4DB20	Yes	E	13.8 x 8.7 x 7.6	22.1	$4,214	V1
575 Vac [3]/3 Phase	**Input Power Supply: Three-Phase 500-600 Vac**								
	1 1/2	1.7	CFW500C01P7T5DB20	Yes	C	8.3 x 5.3 x 6.5	4.4	$910	V1
	3	3.0	CFW500C03P0T5DB20	Yes	C	8.3 x 5.3 x 6.5	4.4	$954	V1
	3	4.3	CFW500C04P3T5DB20	Yes	C	8.3 x 5.3 x 6.5	4.4	$1,073	V1
	7 1/2	7.0	CFW500C07P0T5DB20	Yes	C	8.3 x 5.3 x 6.5	4.4	$1,276	V1
	10	10.0	CFW500C10P0T5DB20	Yes	C	8.3 x 5.3 x 6.5	4.4	$1,621	V1
	10	12.0	CFW500C12P0T5DB20	Yes	C	8.3 x 5.3 x 6.5	4.4	$1,813	V1

Notes:
1) "HP" rating based on "average FLA values". Use as a guide only.
2) Motor FLA may vary with speed and manufacturer. ALWAYS compare motor FLA to Nominal AMPS of drive.
3) All 575V drives are non-stocked items. Consult WEG for availability.
For other technical data please refer to WEG product manual.

Data subject to change without notice.

NEMA 1 Enclosure

Motor Voltage	Motor HP [1]	Drive Amps [2]	Catalog Number	Braking Transistor	Frame Size	Dimensions (in.) HxWxD	Approx. Weight (lbs.)	List Price	Multiplier
230 Vac/3 Phase	**Input Power Supply: Single-Phase 200-240 Vac**								
	1/3	1.6	CFW500A01P6S2NBN1	No	A	8.8 x 3.0 x 5.9	2.4	$451	V1
	3/4	2.6	CFW500A02P6S2NBN1	No	A	8.8 x 3.0 x 5.9	2.4	$463	V1
	1 1/2	4.3	CFW500A04P3S2NBN1	No	A	8.8 x 3.0 x 5.9	2.4	$499	V1
	2	7.0	CFW500A07P0S2NBN1	No	A	8.8 x 3.0 x 5.9	2.4	$633	V1
	Input Power Supply: Single or Three-Phase 200-240 Vac								
	1/3	1.6	CFW500A01P6B2NBN1	No	A	8.8 x 3.0 x 5.9	2.4	$456	V1
	3/4	2.6	CFW500A02P6B2NBN1	No	A	8.8 x 3.0 x 5.9	2.4	$467	V1
	1 1/2	4.3	CFW500A04P3B2NBN1	No	A	8.8 x 3.0 x 5.9	2.4	$506	V1
	2	7.3	CFW500B07P3B2DBN1	Yes	B	9.6 x 3.9 x 6.3	3.3	$678	V1
	3	10.0	CFW500B10P0B2DBN1	Yes	B	9.6 x 3.9 x 6.3	3.3	$789	V1
	Input Power Supply: Three-Phase 200-240 Vac								
	2	7.0	CFW500A07P0T2NBN1	No	A	8.8 x 3.0 x 5.9	2.4	$628	V1
	3	9.6	CFW500A09P6T2NBN1	No	A	8.8 x 3.0 x 5.9	2.4	$773	V1
	5	16	CFW500B16P0T2DBN1	Yes	B	9.6 x 3.9 x 6.3	3.3	$842	V1
	7 1/2	24	CFW500C24P0T2DBN1	Yes	C	10.0 x 5.3 x 6.5	5.3	$1,427	V1
	10	28	CFW500D28P0T2DBN1	Yes	D	14.3 x 7.1 x 6.6	10.2	$1,777	V1
	10	33	CFW500D33P0T2DBN1	Yes	D	14.3 x 7.1 x 6.6	10.2	$2,146	V1
	15	47	CFW500D47P0T2DBN1	Yes	D	14.3 x 7.1 x 6.6	10.2	$2,910	V1
	20	56	CFW500E56P0T2DBN1	Yes	E	13.8 x 8.7 x 7.6	22.1	$3,380	V1
460 Vac/3 Phase	**Input Power Supply: Three-Phase 380-480 Vac**								
	1/2	1.0	CFW500A01P0T4NBN1	No	A	8.8 x 3.0 x 5.9	2.4	$582	V1
	1	1.6	CFW500A01P6T4NBN1	No	A	8.8 x 3.0 x 5.9	2.4	$604	V1
	2	2.6	CFW500A02P6T4NBN1	No	A	8.8 x 3.0 x 5.9	2.4	$649	V1
	3	4.3	CFW500A04P3T4NBN1	No	A	8.8 x 3.0 x 5.9	2.4	$799	V1
	3	6.1	CFW500A06P1T4NBN1	No	A	8.8 x 3.0 x 5.9	2.4	$982	V1
	2	2.6	CFW500B02P6T4DBN1	Yes	B	9.6 x 3.9 x 6.3	3.3	$708	V1
	3	4.3	CFW500B04P3T4DBN1	Yes	B	9.6 x 3.9 x 6.3	3.3	$892	V1
	5	6.5	CFW500B06P5T4DBN1	Yes	B	9.6 x 3.9 x 6.3	3.3	$1,067	V1
	7 1/2	10	CFW500B10P0T4DBN1	Yes	B	9.6 x 3.9 x 6.3	3.3	$1,207	V1
	10	14	CFW500C14P0T4DBN1	Yes	C	10.0 x 5.3 x 6.5	5.3	$1,495	V1
	10	16	CFW500C16P0T4DBN1	Yes	C	10.0 x 5.3 x 6.5	5.3	$1,684	V1
	15	24	CFW500D24P0T4DBN1	Yes	D	14.3 x 7.1 x 6.6	10.2	$2,229	V1
	25	31	CFW500D31P0T4DBN1	Yes	D	14.3 x 7.1 x 6.6	10.2	$2,783	V1
	30	39	CFW500E39P0T4DBN1	Yes	E	13.8 x 8.7 x 7.6	22.1	$3,346	V1
	40	49	CFW500E49P0T4DBN1	Yes	E	13.8 x 8.7 x 7.6	22.1	$4,214	V1
575 Vac [3] /3 Phase	**Input Power Supply: Three-Phase 500-600 Vac**								
	1 1/2	1.7	CFW500C01P7T5DBN1	Yes	C	10.0 x 5.3 x 6.5	5.3	$910	V1
	3	3.0	CFW500C03P0T5DBN1	Yes	C	10.0 x 5.3 x 6.5	5.3	$954	V1
	3	4.3	CFW500C04P3T5DBN1	Yes	C	10.0 x 5.3 x 6.5	5.3	$1,073	V1
	7 1/2	7.0	CFW500C07P0T5DBN1	Yes	C	10.0 x 5.3 x 6.5	5.3	$1,276	V1
	10	10.0	CFW500C10P0T5DBN1	Yes	C	10.0 x 5.3 x 6.5	5.3	$1,621	V1
	10	12.0	CFW500C12P0T5DBN1	Yes	C	10.0 x 5.3 x 6.5	5.3	$1,813	V1

Notes:
1) "HP" rating based on "average FLA values". Use as a guide only.
2) Motor FLA may vary with speed and manufacturer. ALWAYS compare motor FLA to Nominal AMPS of drive.
3) All 575V drives are non-stocked items. Consult WEG for availability.
For other technical data please refer to WEG product manual.

CFW500

Options and Accessories

Type	CATALOG NUMBER	Description	Apprx. Shpg. Wt. (lbs.)	List Price	Multiplier Symbol
I/O	CFW500-IOS [1]	CFW500 I/O Module; 4 DI, 1 AI, 1 AO, 1 DOR, 1 DOT, 1 RS485, 10vdc, 24vdc	0.2	$110	V1
I/O	CFW500-IOD	CFW500 I/O Module; 8 DI, 1 AI, 1 AO, 1 DOR, 4 DOT, 1 RS485, 10vdc, 24vdc	0.2	$141	V1
I/O	CFW500-IOAD	CFW500 I/O Module; 6 DI, 3 AI, 2 AO, 1 DOR, 3 DOT, 1 RS485, 10vdc, 24vdc	0.2	$182	V1
I/O	CFW500-IOR	CFW500 I/O Module; 5 DI, 1 AI, 1 AO, 4 DOR, 1 DOT, 1 RS485, 10vdc, 24vdc	0.2	$125	V1
Encoder Input	CFW500-ENC	CFW500 Encoder Module; Quad Input A & B, 1 RS485, 5 DI, 1 AI, 1 AO, 3 DOR, 1 DOT, 24vdc	0.2	$210	V1
USB Card	CFW500-CUSB	CFW500 Comm. Module; 1 USB, 1 RS485, 4 DI, 1 AI, 1 AO, 1 DOR, 1 DOT, 10vdc, 24vdc	0.2	$210	V1
RS232 Card	CFW500-CRS232	CFW500 Comm. Module; 1 RS232, 1 RS485, 4 DI, 1 AI, 1 AO, 1 DOR, 1 DOT, 24vdc	0.2	$138	V1
RS485 Card	CFW500-CRS485	CFW500 Comm. Module; 2 RS485, 4 DI, 2 AI, 1 AO, 2 DOR, 1 DOT, 10vdc, 24vdc	0.2	$143	V1
CANopen Card	CFW500-CCAN	CFW500 Comm. Module; 1 CAN/DeviceNet, 1 RS485, 2 DI, 1 AI, 1 AO, 1 DOR, 1 DOT, 10vdc, 24vdc	0.2	$138	V1
Profibus DP Card	CFW500-CPDP	CFW500 Comm. Module; 2 DI, 1 AI, 1 AO, 1 DOR, 1 DOT, 1 Profibus DP, 1 RS485, 24vdc	0.2	$405	V1
Profibus DP & DP-V1 Module	CFW500-CPDP2	CFW500 Comm. Module; 1-Profibus DP & DP-V1 100BASE TX RJ-45 Port, 1-RS485, 2-DI, 1-AI, 1-AO, 1-DOR, 1-DOT, 24vdc	0.2	$445	V1
Modbus TCP Comm. Module	CFW500-CEMB-TCP	CFW500 Comm. Module; 1-Modbus TCP 100BASE TX RJ-45 Port, 1-RS485, 2-DI, 1-AI, 1-AO, 1-DOR, 1-DOT, 24vdc	0.2	$499	V1
ProfiNet I/O Comm. Module	CFW500-CEPN-IO	CFW500 Comm. Module; 1-ProfiNet I/O 100BASE TX RJ-45 Port, 1-RS485, 2-DI, 1-AI, 1-AO, 1-DOR, 1-DOT, 24vdc	0.2	$499	V1
EtherNet IP Comm. Module	CFW500-CETH-IP	CFW500 Comm. Module; 2-DI, 1-AI, 1-AO, 1-DOR, 1-DOT, 1-RS485, 1-EtherNet IP 100BASE TX RJ-45 Port, 24vdc	0.2	$499	V1
Flash Memory Module	CFW500-MMF	CFW500 Flash Memory Module for saving and reloading program and parameters to / from the drive	0.2	$189	V1
Remote Keypad	CFW500-HMIR 2	CFW500 Remote Keypad for mounting through enclosure door	0.6	$169	V1
Remote Oper. Station	CSW-SP3PBS	Remote Operator Station-includes 22mm Start PB, Stop PB, 1-NC and 1-NO contact block, 5k-ohm Potentiometer and legends (replaces CFW-REM)	5.0	$460	Z5
Remote Oper. Station	CSW30-SP3PBS	Remote Operator Station-includes 30mm Start PB, Stop PB, 1-NC and 1-NO contact block, 5k-ohm Potentiometer and legends (replaces CFW-REM)	5.0	$535	Z5
HMI Cable 1M	CFW500-CCHMIR01M	3.3 ft (1 meter) Remote Keypad Cable	0.5	$23	V1
HMI Cable 2M	CFW500-CCHMIR02M	6.6 ft (2 meter) Remote Keypad Cable	0.7	$31	V1
HMI Cable 3M	CFW500-CCHMIR03M	9.9 ft (3 meter) Remote Keypad Cable	1.0	$41	V1
HMI Cable 5M	CFW500-CCHMIR05M	16 ft (5 meter) Remote Keypad Cable	1.2	$51	V1
HMI Cable 7.5M	CFW500-CCHMIR075M	25 ft (7.5 meter) Remote Keypad Cable	1.5	$61	V1
HMI Cable 10M	CFW500-CCHMIR010M	33 ft (10 meter) Remote Keypad Cable	2.0	$72	V1
USB Comm. Cable 2M	CFW500-USB02M	USB Communication Cable, 6.6 ft (2 meter) length	0.7	$50	V1
NEMA1 Conduit Kit	CFW500-KN1A	NEMA 1 kit – Frame Size A		$28	V1
NEMA1 Conduit Kit	CFW500-KN1B	NEMA 1 kit – Frame Size B		$33	V1
NEMA1 Conduit Kit	CFW500-KN1C	NEMA 1 kit – Frame Size C		$44	V1
NEMA1 Conduit Kit	CFW500-KN1D	NEMA 1 kit – Frame Size D		$59	V1
NEMA1 Conduit Kit	CFW500-KN1E	NEMA 1 kit – Frame Size E		$64	V1
Cable Sheild Clamp Kit	CFW500-KPCSA	Cable Sheild Clamp Kit for Frame A	1.0	$41	V1
Cable Sheild Clamp Kit	CFW500-KPCSB	Cable Sheild Clamp Kit for Frame B	1.0	$44	V1
Cable Sheild Clamp Kit	CFW500-KPCSC	Cable Sheild Clamp Kit for Frame C	1.1	$46	V1
Cable Sheild Clamp Kit	CFW500-KPCSD	Cable Sheild Clamp Kit for Frame D	1.1	$51	V1

Notes:

1) CFW500-IOS Card is included as standard with CFW500 Drives

2) CFW500-HMIR Remote Keypad requires Qty. (1) CFW500-CCHIR0xM cable. ("x" represents the cable length in meters)

Data subject to change without notice.

Option Card I/O Table

CFW500 Option Module	DI [1]	AI	AO	DOR	DOT	Infrared	Encoder	USB	RS232	RS485	CANopen / DeviceNet	Profibus-DP / DP V1	Modbus TCP	ProfiNet I/O	EtherNet I/P
CFW500-IOS 1	4	1	1	1	1					1					
CFW500-IOD	8	1	1	1	4					1					
CFW500-IOAD	6	3	2	1	3					1					
CFW500-IOR	5	1	1	4	1	1				1					
CFW500-ENC	5	1	1	3	1		1			1					
CFW500-CUSB	4	1	1	1	1			1		1					
CFW500-CRS232	4	1	1	1	1				1	1					
CFW500-CRS485	4	2	1	2	1					2					
CFW500-CCAN	2	1	1	1	1					1	1				
CFW500-CPDP	2	1	1	1	1							1			
CFW500-CPDP2	2	1	1	1	1							1 & 1			
CFW500-CEMB-TCP	2	1	1	1	1								1		
CFW500-CEPN-IO	2	1	1	1	1									1	
CFW500-CETH-IP	2	1	1	1	1										1

Notes:

1) CFW500 Drive includes 4DI as standard. Option Modules provide suplimental I/O as shown in this table.

CFW500

Technical Data

Power Supply	Voltage	Single phase or Three Phase	200-240V (+10%, -15%)
		Three phase	380-480V (+10%, -15%)
	Frequency	50 / 60Hz +/- 2Hz	
	Displacement Power Factor (Cos)	Greater than 0.98	
Enclosure	Degree of Protection	NEMA 1	
	Mounting	Surface mounting with screws or DIN rail mounting	
Control	Control Modes	Volts per Hertz (Scalar)	
		Sensorless Voltage Vector	
	Power Output	Sinusoidal PWM (Space Vector Modulation)	
		IGBT Transistors	
	Switching Frequency	2.5, 5, 10 or 15kHz	
	Frequency Range	0-300 Hz	
	Overload Capacity	150% for 60 seconds, repeatable every 10 min.	
Control Inputs	4 programmable isolated digital inputs, NPN or 24Vdc logic (PNP)		
	2 programmable differential analog inputs; programmable for current or voltage Can be set as DI or as PTC input (0-10V, 4-20mA or 0-20mA)		
Control Outputs	2 programmable relay outputs: One NO (Form A) and one NC (Form B): 240 V / 0.5 A		
	1 Analog Output; programmable for voltage (0-10V) or current (0-20 mA or 4-20 mA) and with 0.25% linearity error		
Communication	Serial	Optional RS-232 serial interface, RS-485 with external RS-232/485 converter	
	Field Bus	Modbus RTU with external RS-232/485 converter	
Safety	Protections	Motor over current	DC link over voltage
		Motor overload	DC link under voltage
		Output phase-to-phase short circuit	Drive over temperature
		Output phase-to-ground short circuit	External fault
		Programming error	
Ambient	Temperature	14 - 122°F (50°C), up to 140°F (60°C) with 2% / 1.8°F (1°C) output current derating	
	Humidity	5-90% Non Condensing	
	Altitude	0-3300 ft (1000m), up to 13,200 ft (4000m) with 10% / 3300ft (1000m) output current derating	
Regulatory Conformance	EMC Directive 89 / 336 / EEC	Electromagnetic compatibility – Industrial Environment EMC Emission and Immunity with optional filter	
	ENC61800-3		
	LVD 73/23/EEC	Low Voltage Directive	
	UL 508 C	Power Conversion Equipment	
Special Functions	Linear and "S" ramp accel and decel, local/remote control, FWD/REV selection, DC braking, manual and auto torque boost, motor slip compensation, electronic pot, two skip frequencies, maximum and minimum adjustable frequency limits, adjustable output current, PID Controller		
Keypad	4 digit display, 2 indicator LEDs and 8 keys		
	Readouts for: output frequency (Hz), output current (A), output voltage (V), motor torque (%) in vector mode, DC bus voltage (V), value proportional to frequency (Ex.: RPM), heatsink temperature, fault and status messages		

Data subject to change without notice.

CFW700

The WEG CFW700 Series was designed to exceed industry expectations. Based on the robust CFW11 platform the CFW700 is designed and optimized for variable torque applications such as pumps and fans.

The CFW700 is the optimal drive for pump and fan control. The drive includes features such as built in PID controllers that can be programmed in engineering units for ease of understanding and set up. The drive also features an integrated power supply to be used with external transducers to measure flow or pressure.

These features combined with the drive's keypad based start up guide, make installation and parameter set up fast and easy.

Standard Features

- Simplicity – same programming as all other WEG drives
- Dual DC Bus chokes for longer VFD lifetime (6% equivalent), reduces harmonics eliminating the need for external line reactors
- Plenum Rated - Meets UL94 Requirements
- 24VDC Power Supply for process transducers - Standard
- Soft-PLC with free programming software
- Encoder Input - Standard
- RS-485 Modbus RTU - Standard
- Conformal Coated boards for harsh industrial environments
- Rated 50 °C (122 °F) – up to 60 °C (140 °F) with derating
- Self-tuning function automatically matches VFD with motor
- UL, cUL, CE, C-Tick, GOST, IRAM approved
- SuperDrive G2 compatible

Applications

- Pumps
- Conveyers
- Agitators and Mixers
- Grizzly Feeders
- Cranes and Hoists
- Presses
- Fans/Blowers
- Compressors
- Extruders
- Centrifuges
- Rollout Tables
- Saws

CFW700 Catalog Number Sequence

CFW700	B	24P0	T	2	DB	N1	Y1

Frame

A, B, C, D, E

Rated Current

03P6 = 3.6 Amps
05P0 = 5.0 Amps
10P0 = 10.0 Amps
24P0 = 24 Amps
33P5 = 33.5 Amps
45P0 = 45 Amps
58P5 = 58.5 Amps
70P0 = 70 Amps
0105 = 105 Amps
0142 = 142 Amps
0211 = 211 Amps

Supply Phases

S = Single Phase
B = 1 or 3 Phase
T = Three Phase

Supply Voltage

2 = 200-240 Vac
4 = 380-480 Vac
5 = 500-600 Vac

Options

NB = No Brake
DB = Dynamic Brake
N1 = NEMA1 (Std.)
20 = IP20
C3 = RFI Filter
Y1 = Safe Stop (STO)
W1 = External 24Vdc

Table intended as reference only and not to create part numbers.

Data subject to change without notice.

NEMA 1 Enclosure

Motor Voltage	ND / VT [1]		HD / CT [1]		Catalog Number	Braking Transistor	Frame Size	Dimensions (in.) HxWxD [6]	Approx. Weight (lbs.) [6]	List Price	Multiplier
	Motor HP [2]	Drive Amps [3]	Motor HP [2]	Drive Amps [3]							
230 Vac	**Input Power Supply: Single or Three-Phase 200-240 Vac with Dynamic Braking Transistor**										
	1 1/2	6.0	1 1/2	5.0	CFW700A06P0B2DBN1	Yes	A	12.1 x 5.8 x 9.0	13.9	$1,370	V1
	2	7.0	2	7.0	CFW700A07P0B2DBN1	Yes	A	12.1 x 5.8 x 9.0	13.9	$1,430	V1
	Input Power Supply: Single-Phase 200-240 Vac with Dynamic Braking Transistor										
	3	10	3	10	CFW700A10P0S2DBN1	Yes	A	12.1 x 5.8 x 9.0	13.9	$1,510	V1
	Input Power Supply: Three-Phase 200-240 Vac with Dynamic Braking Transistor										
	2	7.0	1 1/2	5.5	CFW700A07P0T2DBN1	Yes	A	12.1 x 5.8 x 9.0	13.9	$1,350	V1
	3	10	2	8.0	CFW700A10P0T2DBN1	Yes	A	12.1 x 5.8 x 9.0	13.9	$1,410	V1
	5	13	3	11	CFW700A13P0T2DBN1	Yes	A	12.1 x 5.8 x 9.0	13.9	$1,440	V1
	5	16	5	13	CFW700A16P0T2DBN1	Yes	A	12.1 x 5.8 x 9.0	13.9	$1,542	V1
	7 1/2	24	7 1/2	20	CFW700B24P0T2DBN1	Yes	B	13.9 x 7.5 x 9.0	24.1	$2,020	V1
	10	28	10	24	CFW700B28P0T2DBN1	Yes	B	13.9 x 7.5 x 9.0	24.1	$2,201	V1
	10	33.5	10	28	CFW700B33P5T2DBN1	Yes	B	13.9 x 7.5 x 9.0	24.1	$2,600	V1
	15	45	15	36	CFW700C45P0T2DBN1	Yes	C	17.7 x 8.7 x 11.5	44.6	$2,900	V1
	20	54	20	45	CFW700C54P0T2DBN1	Yes	C	17.7 x 8.7 x 11.5	44.6	$3,700	V1
	25	70	20	56	CFW700C70P0T2DBN1	Yes	C	17.7 x 8.7 x 11.5	44.6	$4,880	V1
	30	86	25	70	CFW700D86P0T2DBN1	Yes	D	19.9 x 11.9 x 12.0	120.2	$6,101	V1
	40	105	30	86	CFW700D0105T2DBN1	Yes	D	19.9 x 11.9 x 12.0	120.2	$8,100	V1
	50	142	40	115	CFW700E142T2DBN1C3	Yes	E [5]	26.6 x 13.2 x 14.1	143	$11,500	V1
	60	180	50	142	CFW700E180T2DBN1C3	Yes	E [5]	26.6 x 13.2 x 14.1	143	$15,500	V1
	75	211	60	180	CFW700E211T2DBN1C3	Yes	E [5]	26.6 x 13.2 x 14.1	143	$21,222	V1
	Input Power Supply: Three-Phase 200-240 Vac without Dynamic Braking Transistor										
	50	142	40	115	CFW700E142T2NBN1C3	No	E [5]	26.6 x 13.2 x 14.1	143	$10,101	V1
	60	180	50	142	CFW700E180T2NBN1C3	No	E [5]	26.6 x 13.2 x 14.1	143	$12,999	V1
	75	211	60	180	CFW700E211T2NBN1C3	No	E [5]	26.6 x 13.2 x 14.1	143	$18,555	V1

Notes:

1) CT = Constant Torque, 150% overload / 60 sec.; VT = Variable Torque (Quadratic Load), 110% overload / 60 sec.
2) "HP" rating based on "average FLA values". Use as a guide only.
3) Motor FLA may vary with speed and manufacturer. ALWAYS compare motor FLA to Nominal AMPS of drive.
4) All 575V drives are non-stocked items. Consult WEG for availability.
5) Maximum 45°C ambient temperature without derating
6) Dimensions and weights are provided for estimating purposes only.
For other technical data please refer to WEG product manual.

CFW700

NEMA 1 Enclosure

Motor Voltage	ND / VT [1]		HD / CT [1]		Catalog Number	Braking Transistor	Frame Size	Dimensions (in.) HxWxD [6]	Approx. Weight (lbs.) [6]	List Price	Multiplier
	Motor HP [2]	Drive Amps [3]	Motor HP [2]	Drive Amps [3]							
460 Vac	**Input Power Supply: Three-Phase 380-480 Vac with Dynamic Braking Transistor**										
	2	3.6	2	3.6	CFW700A03P6T4DBN1	Yes	A	12.1 x 5.8 x 9.0	13.9	$1,350	V1
	3	5.0	3	5.0	CFW700A05P0T4DBN1	Yes	A	12.1 x 5.8 x 9.0	13.9	$1,444	V1
	5	7.0	3	5.5	CFW700A07P0T4DBN1	Yes	A	12.1 x 5.8 x 9.0	13.9	$1,510	V1
	7 1/2	10	5	10	CFW700A10P0T4DBN1	Yes	A	12.1 x 5.8 x 9.0	13.9	$1,600	V1
	10	13.5	7 1/2	11	CFW700A13P5T4DBN1	Yes	A	12.1 x 5.8 x 9.0	13.9	$1,711	V1
	10	17	10	13.5	CFW700B17P0T4DBN1	Yes	B	13.9 x 7.5 x 9.0	24.1	$2,055	V1
	15	24	10	19	CFW700B24P0T4DBN1	Yes	B	13.9 x 7.5 x 9.0	24.1	$2,455	V1
	20	31	15	25	CFW700B31P0T4DBN1	Yes	B	13.9 x 7.5 x 9.0	24.1	$3,450	V1
	25	38	20	33	CFW700C38P0T4DBN1	Yes	C	17.7 x 8.7 x 11.5	44.6	$3,888	V1
	30	45	25	38	CFW700C45P0T4DBN1	Yes	C	17.7 x 8.7 x 11.5	44.6	$5,000	V1
	40	58.5	30	47	CFW700C58P5T4DBN1	Yes	C	17.7 x 8.7 x 11.5	44.6	$5,800	V1
	50/60	70.5	40	61	CFW700D70P5T4DBN1	Yes	D	19.9 x 11.9 x 12.0	120.2	$6,888	V1
	60/75	88	50	73	CFW700D88P0T4DBN1	Yes	D	19.9 x 11.9 x 12.0	120.2	$8,100	V1
	75	105	75	88	CFW700E105T4DBN1C3	Yes	E [5]	26.6 x 13.2 x 14.1	143	$11,989	V1
	100/125	142	75	115	CFW700E142T4DBN1C3	Yes	E [5]	26.6 x 13.2 x 14.1	143	$14,989	V1
	150	180	100	142	CFW700E180T4DBN1C3	Yes	E [5]	26.6 x 13.2 x 14.1	143	$20,989	V1
	175	211	150	180	CFW700E211T4DBN1C3	Yes	E [5]	26.6 x 13.2 x 14.1	143	$25,989	V1
	Input Power Supply: Three-Phase 380-480 Vac without Dynamic Braking Transistor										
	75	105	75	88	CFW700E105T4NBN1C3	No	E [5]	26.6 x 13.2 x 14.1	143	$9,999	V1
	100/125	142	75	115	CFW700E142T4NBN1C3	No	E [5]	26.6 x 13.2 x 14.1	143	$12,000	V1
	150	180	100	142	CFW700E180T4NBN1C3	No	E [5]	26.6 x 13.2 x 14.1	143	$15,400	V1
	175	211	150	180	CFW700E0211T4NBN1C3	No	E [5]	26.6 x 13.2 x 14.1	143	$18,787	V1

Notes:

1) CT = Constant Torque, 150% overload / 60 sec.; VT = Variable Torque (Quadratic Load), 110% overload / 60 sec.
2) "HP" rating based on "average FLA values". Use as a guide only.
3) Motor FLA may vary with speed and manufacturer. ALWAYS compare motor FLA to Nominal AMPS of drive.
4) All 575V drives are non-stocked items. Consult WEG for availability.
5) Maximum 45°C ambient temperature without derating
6) Dimensions and weights are provided for estimating purposes only.
For other technical data please refer to WEG product manual.

Data subject to change without notice.

NEMA 1 Enclosure

Motor Voltage	ND / VT [1]		HD / CT [1]		Catalog Number	Braking Transistor	Frame Size	Dimensions (in.) HxWxD [6]	Approx. Weight (lbs.) [6]	List Price	Multiplier
	Motor HP [2]	Drive Amps [3]	Motor HP [2]	Drive Amps [3]							
575 Vac [4]	**Input Power Supply: Three-Phase 500-600 Vac with Dynamic Braking Transistor**										
	2	2.9	2	2.7	CFW700B02P9T5DBN1	Yes	B	13.9 x 7.5 x 9.0	24.1	$1,689	V1
	3	4.2	3	3.8	CFW700B04P2T5DBN1	Yes	B	13.9 x 7.5 x 9.0	24.1	$1,759	V1
	7 1/2	7.0	5	6.5	CFW700B07P0T5DBN1	Yes	B	13.9 x 7.5 x 9.0	24.1	$1,874	V1
	10	10	7 1/2	9.0	CFW700B10P0T5DBN1	Yes	B	13.9 x 7.5 x 9.0	24.1	$2,048	V1
	10	12	10	10	CFW700B12P0T5DBN1	Yes	B	13.9 x 7.5 x 9.0	24.1	$2,171	V1
	15	17	15	17	CFW700B17P0T5DBN1	Yes	B	13.9 x 7.5 x 9.0	24.1	$2,552	V1
	20	22	20	19	CFW700D22P0T5DBN1	Yes	D	19.9 x 11.9 x 12.0	120.2	$4,235	V1
	25	27	20	22	CFW700D27P0T5DBN1	Yes	D	19.9 x 11.9 x 12.0	120.2	$4,506	V1
	30	32	25	27	CFW700D32P0T5DBN1	Yes	D	19.9 x 11.9 x 12.0	120.2	$6,486	V1
	40	44	30	36	CFW700D44P0T5DBN1	Yes	D	19.9 x 11.9 x 12.0	120.2	$7,309	V1
	50	53	40	44	CFW700E53P0T5DBN1C3	Yes	E [5]	26.6 x 13.2 x 14.1	143	$9,118	V1
	60	63	50	53	CFW700E63P0T5DBN1C3	Yes	E [5]	26.6 x 13.2 x 14.1	143	$11,580	V1
	75	80	75	66	CFW700E80P0T5DBN1C3	Yes	E [5]	26.6 x 13.2 x 14.1	143	$12,091	V1
	100	107	100	90	CFW700E0107T5DBN1C3	Yes	E [5]	26.6 x 13.2 x 14.1	143	$16,240	V1
	125	125	100	107	CFW700E0125T5DBN1C3	Yes	E [5]	26.6 x 13.2 x 14.1	143	$16,910	V1
	150	150	125	122	CFW700E0150T5DBN1C3	Yes	E [5]	26.6 x 13.2 x 14.1	143	$23,456	V1
	Input Power Supply: Three-Phase 500-600 Vac without Dynamic Braking Transistor										
	20	22	20	19	CFW700D22P0T5NBN1	No	D	26.6 x 13.2 x 14.1	120.2	$3,921	V1
	25	27	20	22	CFW700D27P0T5NBN1	No	D	26.6 x 13.2 x 14.1	120.2	$4,450	V1
	30	32	25	27	CFW700D32P0T5NBN1	No	D	26.6 x 13.2 x 14.1	120.2	$5,763	V1
	40	44	30	36	CFW700D44P0T5NBN1	No	D	26.6 x 13.2 x 14.1	120.2	$6,768	V1
	50	53	40	44	CFW700E53P0T5NBN1C3	No	E [5]	26.6 x 13.2 x 14.1	143	$8,446	V1
	60	63	50	53	CFW700E63P0T5NBN1C3	No	E [5]	26.6 x 13.2 x 14.1	143	$10,728	V1
	75	80	75	66	CFW700E80P0T5NBN1C3	No	E [5]	26.6 x 13.2 x 14.1	143	$11,200	V1
	100	107	100	90	CFW700E0107T5NBN1C3	No	E [5]	26.6 x 13.2 x 14.1	143	$15,042	V1
	125	125	100	107	CFW700E0125T5NBN1C3	No	E [5]	26.6 x 13.2 x 14.1	143	$15,662	V1
	150	150	125	122	CFW700E0150T5NBN1C3	No	E [5]	26.6 x 13.2 x 14.1	143	$21,723	V1

Notes:
1) CT = Constant Torque, 150% overload / 60 sec.; VT = Variable Torque (Quadratic Load), 110% overload / 60 sec.
2) "HP" rating based on "average FLA values". Use as a guide only.
3) Motor FLA may vary with speed and manufacturer. ALWAYS compare motor FLA to Nominal AMPS of drive.
4) All 575V drives are non-stocked items. Consult WEG for availability.
5) Maximum 45°C ambient temperature without derating
6) Dimensions and weights are provided for estimating purposes only.
For other technical data please refer to WEG product manual.

CFW700

Options and Accessories

Type	Catalog Number	Description	List Price	Multiplier
Communication	CAN-01	CAN interface module (CANopen/DeviceNet) (CFW11 & CFW700)	$410	V1
	PROFIBUS DP-01	Profibus DP-V1 interface module (CFW11 & CFW700)	$520	V1
I/O	CCK-01	Relay Output Module for CFW700 and CFW701, 2 Form C Relay Outputs	$105	V1
Flash Memory	MMF-02	Flash Memory Module for CFW700 and CFW701	$71	V1
Keypad and Accessories	HMI-02	CFW700 Standard Keypad with USB	$320	V1
	RHMIF-02	CFW700 Remote Keypad Frame Kit	$69	V1
	HMI-03	CFW701 Standard Keypad with USB	$320	V1
	RHMIF-03	CFW701 Remote Keypad Frame Kit	$69	V1
	HMID-01	Blank Keypad Cover for Keypad Slot (CFW11, CFW700 & CFW701)	$54	V1
Remote Keypad Cable	IHM-CAB-RS-1M	3.3 ft (1 meter) Remote Keypad Cable (CFW11 & CFW700)	$54	V1
	IHM-CAB-RS-2M	6.6 ft (2 meter) Remote Keypad Cable (CFW11 & CFW700)	$60	V1
	IHM-CAB-RS-3M	9.9 ft (3 meter) Remote Keypad Cable (CFW11 & CFW700)	$66	V1
	IHM-CAB-RS-5M	16 ft (5 meter) Remote Keypad Cable (CFW11 & CFW700)	$75	V1
	IHM-CAB-RS-7.5M	25 ft (7.5 meter) Remote Keypad Cable (CFW11 & CFW700)	$90	V1
	IHM-CAB-RS-10M	33 ft (10 meter) Remote Keypad Cable (CFW11 & CFW700)	$102	V1
Remote Oper. Station	CSW-SP3PBS	Remote Operator Station-includes 22mm Start PB, Stop PB, 1-NC and 1-NO contact block, 5k-ohm Potentiometer and legends (replaces CFW-REM)	$460	Z5
	CSW30-SP3PBS	Remote Operator Station-includes 30mm Start PB, Stop PB, 1-NC and 1-NO contact block, 5k-ohm Potentiometer and legends (replaces CFW-REM)	$535	Z5
Conduit Kit	KN1A-02	Conduit Kit for frame size A with power cables shielding	$125	V1
	KN1B-02	Conduit Kit for frame size B with power cables shielding	$125	V1
	KN1C-02	Conduit Kit for frame size C with power cables shielding	$142	V1
	KN1E-01	Top cover kit for frame size E (105 & 142A)	$78	V1
	KN1E-02	Top cover kit plus Conduit kit for frame size E (180 & 211A)	$213	V1
	KIP21D-01	IP21 Kit for Frame size D (top cover) (CFW11 & CFW700)	$120	V1
Cable Shield Kit	PCSA-01	Power Cables Shielding Kit for frame size A (CFW11 & CFW700)	$48	V1
	PCSB-01	Power Cables Shielding Kit for frame size B (CFW11 & CFW700)	$51	V1
	PCSC-01	Power Cables Shielding Kit for frame size C (CFW11 & CFW700)	$54	V1
	PCSD-01	Power Cables Shielding Kit for frame size D (CFW11 & CFW700)	$56	V1
	PCSE-01	Power Cables Shielding Kit for frame size E (CFW11 & CFW700)	$76	V1

Data subject to change without notice.

Technical Data

Power Supply	Voltage	Single Phase or Three Phase	200-240V (+10%, -15%)
		Three phase	380-480V (+10%, -15%)
	Frequency	50 / 60Hz +/- 2Hz	
	Displacement Power Factor (Cos)	Greater than 0.98	
Enclosure	Degree of Protection	NEMA 1	
Control	Control Modes	Volts per Hertz (Scalar)	Voltage Vector (VVW)
		Sensorless Vector	Vector with encoder
	Power Output	Sinusoidal PWM (Space Vector Modulation)	
		IGBT Transistors	
	Switching Frequency	1.25, 2.0, 2.5, 5.0 or 10.0 kHz	
	Frequency Range	0-300 Hz in Scalar Mode; 120 Hz in Vector Mode	
	Overload Capacity	CT = Constant Torque, 150% overload / 60 sec. VT = Variable Torque (Quadratic Load), 110% overload / 60 sec.	
Control Inputs	8 programmable isolated digital inputs, 24Vdc logic		
	2 isolated programmable differential analog inputs 11 bit; programmable for current or voltage (0-10V, 4-20mA or 0-20mA)		
	Motor thermistor - PTC/PT100/KTY84		
	Incremental encoder input – 5 to 12V		
Control Outputs	1 programmable relay output; NO/NC (Form C); 240Vac, 30Vdc / 0.75 A		
	4 programmable isolated open collector digital outputs; 24Vdc, 80mA max.		
	2 non-isolated programmable analog outputs 10 bit; programmable for current or voltage (0-10V, 4-20mA or 0-20mA)		
Communication	Serial	Optional RS-232 serial interface, RS-485 with external RS-232/485 converter	
	Field Bus	Isolated RS-485 / Modbus RTU (standard)	
		CAN interface module (CANopen/DeviceNet)	
		Profibus DP interface module	
Safety	Protections	Motor over current	DC link over voltage
		Motor overload	DC link under voltage
		Output phase-to-phase short circuit	Drive over temperature
		Output phase-to-ground short circuit	External fault
		Programming error	
Ambient	Temperature	14 - 122°F (50°C), up to 140°F (60°C) with 2% / 1.8°F (1°C) output current derating	
	Humidity	5-90% Non Condensing	
	Altitude	0-3300 ft (1000m), up to 13,200 ft (4000m) with 1% output current derating per 330ft (100m) above 3300 ft (1000m).	
Regulatory / Safety Conformance	IEC 60146	Semiconductor convertors	
	UL 508 C	Power Conversion Equipment	
	UL 840	Insulation coordination including clearances and creepage distances for electrical equipment.	
	UL 94	Plenum Rated - Meets UL94 Standard for Tests for Flammability	
	EN 50178	Electronic equipment for use in power installations	
	EN 61800-2	General requirements adjustable speed electrical power drive systems	
	EN 61800-3	EMC product standard including specific test methods adjustable speed electrical power drive systems	
	EN 61800-5-1	Safety requirements adjustable speed electrical power drive systems	
	EN 60204-1	Safety of machinery. Electrical equipment of machines. Part 1: General requirements.	
	RoHS and WEEE Guidelines		
Approvals	UL, cUL, CE, C-Tick, GOST, IRAM		
Special Functions	Linear and "S" ramp accel and decel, local/remote control, FWD/REV selection, DC braking, manual and auto torque boost, motor slip compensation, electronic pot, two skip frequencies, max. and min. adjustable frequency limits, adjustable output current, PID Controller		
Keypad	Backlit LCD display with 9 operator keys, remote mounting option available		
	Readouts for: output frequency (Hz), output current (A), output voltage (V), motor torque (%) in vector mode, DC bus voltage (V), value proportional to frequency (Ex.: RPM), heatsink temperature, fault and status messages		

CFW700

100% Braking Torque at 20% Duty Cycle (12 Seconds Max. Braking Time) NEMA 1 Enclosure

Motor Voltage	Motor HP [1]	CFW11 Catalog Number	Braking Resistor Catalog Number [2]	Rated Ohms	Rated Watts	Dimensions (in.) HxWxD [3]	List Price	Multiplier
230 Vac	1 1/2	CFW700A06P0B2DBN1	CFDB5-125-224	125	224	5 x 12 x 5	$520	V1
	2	CFW700A07P0B2DBN1	CFDB5-95-298	95	298	5 x 12 x 7	$749	V1
	2	CFW700A07P0T2DBN1	CFDB5-95-298	95	298	5 x 12 x 7	$749	V1
	3	CFW700A10P0S2DBN1	CFDB5-63-448	63	448	5 x 12 x 7	$749	V1
	3	CFW700A10P0T2DBN1	CFDB5-63-448	63	448	5 x 12 x 7	$749	V1
	5	CFW700A13P0T2DBN1	CFDB5-38-746	38	746	5 x 12 x 10	$941	V1
	5	CFW700A16P0T2DBN1	CFDB5-38-746	38	746	5 x 12 x 10	$941	V1
	7 1/2	CFW700B24P0T2DBN1	CFDB5-26-1119	26	1,119	5 x 12 x 13	$1,130	V1
	10	CFW700B28P0T2DBN1	CFDB5-19-1492	19	1,492	5 x 12 x 16	$1,322	V1
	10	CFW700B33P5T2DBN1	CFDB5-19-1492	19	1,492	5 x 12 x 16	$1,322	V1
	15	CFW700C45P0T2DBN1	CFDB5-13-2238	12.6	2,238	5 x 19 x 10	$1,644	V1
	20	CFW700C54P0T2DBN1	CFDB5-10-2984	9.6	2,984	5 x 19 x 10	$1,644	V1
	25	CFW700C70P0T2DBN1	CFDB5-8-3730	7.5	3,730	5 x 19 x 13	$1,997	V1
	30	CFW700D86P0T2DBN1	CFDB5-7-4476	6.3	4,476	5 x 26.5 x 13	$2,588	V1
	40	CFW700D0105T2DBN1	CFDB5-5-5968	4.9	5,968	5 x 26.5 x 16	$3,269	V1
	50	CFW700E142T2DBN1C3	CFDB5-4-7460	3.9	7,460	10 x 28 x 10	$3,820	V1
	60	CFW700E180T2DBN1C3	CFDB5-4-8952	3.3	8,952	10 x 28 x 10	$3,820	V1
	75	CFW700E211T2DBN1C3	CFDB5-3-11190	2.7	11,190	10 x 28 x 13	$5,622	V1
460 Vac	2	CFW700A03P6T4DBN1	CFDB5-375-298	375	298	5 x 12 x 7	$749	V1
	3	CFW700A05P0T4DBN1	CFDB5-250-448	250	448	5 x 12 x 7	$749	V1
	5	CFW700A07P0T4DBN1	CFDB5-150-746	150	746	5 x 12 x 10	$941	V1
	7 1/2	CFW700A10P0T4DBN1	CFDB5-100-1119	100	1,119	5 x 12 x 13	$1,130	V1
	10	CFW700A13P5T4DBN1	CFDB5-75-1492	75	1,492	5 x 12 x 16	$1,322	V1
	10	CFW700B17P0T4DBN1	CFDB5-75-1492	75	1,492	5 x 12 x 16	$1,322	V1
	15	CFW700B24P0T4DBN1	CFDB5-50-2238	50	2,238	5 x 19 x 13	$1,820	V1
	20	CFW700B31P0T4DBN1	CFDB5-38-2984	38	2,984	5 x 19 x 16	$2,201	V1
	25	CFW700C38P0T4DBN1	CFDB5-30-3730	30	3,730	5 x 26.5 x 13	$2,511	V1
	30	CFW700C45P0T4DBN1	CFDB5-25-4476	25	4,476	5 x 26.5 x 13	$2,511	V1
	40	CFW700C58P5T4DBN1	CFDB5-19-5968	19	5,968	5 x 26.5 x 16	$2,938	V1
	50/60	CFW700D70P5T4DBN1	CFDB2-15-8952	15	8,952	10 x 28 x 13	$4,328	V1
	60/75	CFW700D88P0T4DBN1	CFDB5-10-11190	10	11,190	10 x 28 x 16	$5,659	V1
	75	CFW700E105T4DBN1C3	CFDB5-10-11190	10	11,190	10 x 28 x 16	$5,659	V1
	100/125	CFW700E142T4DBN1C3	CFDB5-8-18650	8	18,650	24 x 30 x 18	$9,560	V1
	150	CFW700E180T4DBN1C3	CFDB5-5-22380	5	22,380	24 x 30 x 18	$11,854	V1
	175	CFW700E211T4DBN1C3	CFDB5-5-29840	5	29,840	24 x 30 x 18	$11,854	V1

Notes:
1) Dimensions are provided for estimating purposes only.

Data subject to change without notice.

100% Braking Torque at 50% Duty Cycle (30 Seconds Max. Braking Time) NEMA 1 Enclosure

Motor Voltage	Motor HP [1]	CFW700 Catalog Number	Braking Resistor Catalog Number [2]	Rated Ohms	Rated Watts	Dimensions (in.) HxWxD [3]	List Price	Multiplier
230 Vac	1 1/2	CFW700A06P0B2DBN1	CFDB5-125-560	125	560	5 x 12 x 10	$941	V1
	2	CFW700A07P0B2DBN1	CFDB5-95-746	95	746	5 x 12 x 10	$941	V1
	2	CFW700A7P0T2DBN1	CFDB5-95-746	95	746	5 x 12 x 10	$941	V1
	3	CFW700A10P0S2DBN1	CFDB5-63-1119	63	1,119	5 x 12 x 10	$1,130	V1
	3	CFW700A10P0T2DBN1	CFDB5-63-1119	63	1,119	5 x 12 x 10	$1,130	V1
	5	CFW700A13P0T2DBN1	CFDB5-38-1865	38	1,865	5 x 19 x 13	$1,820	V1
	5	CFW700A16P0T2DBN1	CFDB5-38-1865	38	1,865	5 x 19 x 13	$1,820	V1
	7 1/2	CFW700B24P0T2DBN1	CFDB5-26-2798	26	2,798	5 x 26.5 x 13	$2,511	V1
	10	CFW700B28P0T2DBN1	CFDB5-19-3730	19	3,730	5 x 26.5 x 13	$2,511	V1
	10	CFW700B33P5T2DBN1	CFDB5-19-3730	19	3,730	5 x 26.5 x 13	$2,511	V1
	15	CFW700C45P0T2DBN1	CFDB5-13-5595	12.6	5,595	5 x 26.5 x 16	$2,938	V1
	20	CFW700C54P0T2DBN1	CFDB5-10-7460	9.6	7,460	10 x 28 x 13	$4,663	V1
	25	CFW700C70P0T2DBN1	CFDB5-8-9325	7.5	9,325	10 x 28 x 13	$4,663	V1
	30	CFW700D86P0T2DBN1	CFDB5-7-11190	6.3	11,190	10 x 28 x 16	$5,254	V1
	40	CFW700D0105T2DBN1	CFDB5-5-14920	4.9	14,920	24 x 30 x 18	$6,762	V1
	50	CFW700E142T2DBN1C3	CFDB5-4-18650	3.9	18,650	24 x 30 x 18	$10,325	V1
	60	CFW700E180T2DBN1C3	CFDB5-4-22380	3.3	22,380	24 x 30 x 18	$10,325	V1
	75	CFW700E211T2DBN1C3	CFDB5-3-27975	2.7	27,975	32 x 30 x 18	$10,325	V1
460 Vac	2	CFW700A03P6T4DBN1	CFDB5-375-746	375	746	5 x 12 x 13	$1,130	V1
	3	CFW700A05P0T4DBN1	CFDB5-250-1119	250	1,119	5 x 12 x 16	$1,511	V1
	5	CFW700A07P0T4DBN1	CFDB5-150-1865	150	1,865	5 x 19 x 13	$1,703	V1
	7 1/2	CFW700A10P0T4DBN1	CFDB5-100-2798	100	2,798	5 x 19 x 16	$1,892	V1
	10	CFW700A13P5T4DBN1	CFDB5-75-3730	75	3,730	5 x 26.5 x 16	$2,938	V1
	10	CFW700B17P0T4DBN1	CFDB5-75-3730	75	3,730	5 x 26.5 x 16	$2,938	V1
	15	CFW700B24P0T4DBN1	CFDB5-50-5595	50	5,595	10 x 28 x 13	$4,254	V1
	20	CFW700B31P0T4DBN1	CFDB5-38-7460	38	7,460	10 x 28 x 13	$4,254	V1
	25	CFW700C38P0T4DBN1	CFDB5-30-9325	30	9,325	10 x 28 x 16	$4,715	V1
	30	CFW700C45P0T4DBN1	CFDB5-25-11190	25	11,190	10 x 28 x 16	$5,071	V1
	40	CFW700C58P5T4DBN1	CFDB5-19-14920	19	14,920	24 x 30 x 18	$8,858	V1
	50/60	CFW700D70P5T4DBN1	CFDB2-15-22380	15	22,380	24 x 30 x 18	$10,176	V1
	75	CFW700D88P0T4DBN1	CFDB5-10-27975	10	27,975	32 x 30 x 18	$14,625	V1
	75	CFW700E105T4DBN1C3	CFDB5-10-27975	10	27,975	32 x 30 x 18	$14,625	V1
	100/125	CFW700E142T4DBN1C3	CFDB5-8-46625	8	46,625	32 x 30 x 18	$16,923	V1
	150	CFW700E180T4DBN1C3	CFDB5-5-55950	5	55,950	48 x 30 x 18	$18,814	V1
	175	CFW700E211T4DBN1C3	CFDB5-5-74600	5	74,600	72 x 30 x 18	$31,678	V1

Notes:
1) "HP" rating based on "average FLA values". Use as a guide only.
2) Dynamic Braking Resistors are non-stock items. Consult WEG for availability.
3) Dimensions are provided for estimating purposes only.

3% Z (Impedance) – NEMA 1 Enclosure

Motor Voltage	Motor HP	Reactor Amps	Catalog Number	Dimensions (in.) [1] HxWxD	Approx. Weight (lbs.) [1]	List Price	Multiplier
230 Vac	**Input Power Supply: Three-Phase 230 Vac**						
	3	12	LRW012D3N1	8 x 8 x 6	16	$436	V1
	5	18	LRW018D3N1	8 x 8 x 6	16	$512	V1
	7 1/2	25	LRW025D3N1	13 x 13.3 x 13.1	42	$590	V1
	10	35	LRW035D3N1	13 x 13.3 x 13.1	45	$634	V1
	15	45	LRW045D3N1	13 x 13.3 x 13.1	54	$756	V1
	20	55	LRW055D3N1	13 x 13.3 x 13.1	55	$890	V1
	25 / 30	80	LRW080D3N1	13 x 13.3 x 13.1	74	$905	V1
	40	100	LRW100D3N1	13 x 13.3 x 13.1	78	$1,086	V1
	50	130	LRW130D3N1	13 x 13.3 x 13.1	60	$1,175	V1
	60	160	LRW160D3N1	13 x 13.3 x 13.1	71	$1,424	V1
	75	200	LRW200D3N1	13 x 13.3 x 13.1	79	$1,488	V1
460 Vac	**Input Power Supply: Three-Phase 460 Vac**						
	1 1/2	2	LRW002G3N1	8 x 8 x 6	11	$387	V1
	2 , 3	4	LRW004G3N1	8 x 8 x 6	11	$394	V1
	5	8	LRW008G3N1	8 x 8 x 6	14	$415	V1
	7 1/2	12	LRW012G3N1	8 x 8 x 6	16	$452	V1
	10	18	LRW018G3N1	8 x 8 x 6	16	$519	V1
	15	25	LRW025G3N1	13 x 13.3 x 13.1	42	$601	V1
	20 / 25	35	LRW035G3N1	13 x 13.3 x 13.1	45	$715	V1
	30	45	LRW045G3N1	13 x 13.3 x 13.1	54	$841	V1
	40	55	LRW055G3N1	13 x 13.3 x 13.1	55	$987	V1
	50 / 60	80	LRW080G3N1	13 x 13.3 x 13.1	60	$1,179	V1
	75	100	LRW100G3N1	13 x 13.3 x 13.1	71	$1,450	V1
	100	130	LRW130G3N1	13 x 13.3 x 13.1	74	$1,750	V1
	125	160	LRW160G3N1	13 x 13.3 x 13.1	48	$2,060	V1
	150	200	LRW200G3N1	13 x 13.3 x 13.1	79	$2,400	V1
	200	250	LRW250G3N1	24 x 18.4 x 16.8	99	$2,990	V1
	250	320	LRW320G3N1	24 x 18.4 x 16.8	155	$3,700	V1
	300	400	LRW400G3N1	24 x 18.4 x 16.8	155	$4,962	V1
	350 / 400	500	LRW500G3N1	47 x 26.5 x 24.9	165	$6,446	V1
	450 / 500	600	LRW600G3N1	47 x 26.5 x 24.9	205	$7,950	V1
	750 / 800	1000	LRW1000G3N1	Consult Factory		$9,788	V1

Notes:
1) Dimensions and weights are provided for estimating purposes only.

Data subject to change without notice.

CFW08 WASH

The WEG CFW08 WASH Series is a redesign of our successful uline VFDs. Engineering improvements have produced one of the most compact and full featured microdrives in the marketplace.

Outstanding features and options in a NEMA 4 enclosure allow the CFW08 WASH to be successfully used in a large variety of applications.

Standard Features

- Same programming as other WEG VFD's
- V/Hz and Sensorless Vector Control
- NEMA 4X(IP56) Enclosure
- Single and Three-phase input voltage
- 200-240V, 380-480V or 500-600 input voltage
- 150% current overload capacity
- 16 bit DSP controlled PWM output
- 2.5 / 5 / 10 / 15 kHz adjustable swiching frequency
- Four isolated programmable digital inputs
- Two programmable relay outputs (1NO, 1NC, 240vac 0.5A)
- Two isolated programmable analog inputs (0-10V, 0/4-20mA)
- Protective features: Over current, motor overload, drive over temperature, output phase-to-phase and phase-to-ground short circuit, DC bus over and under voltage and external fault
- Control features: Linear and "S" ramp acceleration and deceleration, local/remote control, DC braking, torque boost, motor slip compensation, electronic pot, preset speeds, adjustable V/Hz profile, maximum and minimum adjustable frequency limits, two skip frequencies, adjustable output current limit, JOG, ride-thru, flying start and PID regulator.
- Display readings: Motor speed, frequency, voltage, current, last fault, heatsink temperature and drive status
- Ambient: 32°F (0°C) to 104°F (40°C), 3300ft (1000m) altitude, 90% humidity, non-condensing
- SuperDrive (G1) compatible

Applications NEMA 4X

- Pumps
- Fans
- Blowers
- Conveyors
- Rollout tables
- Agitators
- Mixers
- Any washdown applications

Optional Features

- Dynamic Braking Resistors available
- Remote Keypad with Copy Function
- RS-232 or RS-485 Serial Interface
- Modbus Communication*
- DIN rail mounting through 2HP

*Requires optional RS-232 or RS-485 Interface

CFW08 WASH Catalog Number Sequence

CFW08	0016	B	D	N4	A1	Z

Rated Current

0016 = 1.6 Amps
0026 = 2.6 Amps
0040 = 4.0 Amps
0073 = 7.3 Amps
0100 = 10.0 Amps
0240 = 24.0 Amps
0300 = 30.0 Amps

Supply Voltage

D = 200-240 Vac
G = 380-480 Vac
H = 500-600 Vac

Supply Phases

B = 1 or 3 Phase
T = Three Phase

Options

N4 = NEMA 4X
A1 = Plus Version
Z = End

Table intended as reference only and not to create part numbers.

Data subject to change without notice.

Wash Down - NEMA 4X Enclosure

Motor Voltage	Motor HP [1]	Drive Amps [2]	Catalog Number	Braking Transistor	Frame Size	Dimensions (in.) HxWxD	Approx. Weight (lbs.)	List Price	Multiplier
230 Vac	**Input Power Supply: Single or Three-Phase 200-240 Vac**								
	2	7.3	CFW080073BDN4A1Z	Yes	A	10.4 x 6.5 x 8.5	5	**$929**	V1
	3	10.0	CFW080100BDN4A1Z	Yes	A	10.4 x 6.5 x 8.5	5	**$1,039**	V1
	Input Power Supply: Three-Phase 230 Vac								
	5	16	CFW080160TDN4A1Z	Yes	A	10.4 x 6.5 x 8.5	5	**$1,228**	V1
	7 1/2	22	CFW080220TDN4A1Z	Yes	B	13.4 x 8.5 x 8.5	18	**$1,769**	V1
	10	28	CFW080280TDN4A1Z	Yes	B	13.4 x 8.5 x 8.5	18	**$2,266**	V1
460 Vac	**Input Power Supply: Three-Phase 380-480 Vac**								
	1	2.7	CFW080027TGN4A1Z	Yes	A	10.4 x 6.5 x 8.5	5	**$894**	V1
	2	4.3	CFW080043TGN4A1Z	Yes	A	10.4 x 6.5 x 8.5	5	**$1,118**	V1
	3	6.5	CFW080065TGN4A1Z	Yes	A	10.4 x 6.5 x 8.5	5	**$1,331**	V1
	5	10	CFW080100TGN4A1Z	Yes	A	10.4 x 6.5 x 8.5	5	**$1,516**	V1
	7 1/2	13	CFW080130TGN4A1Z	Yes	B	13.4 x 8.5 x 8.5	18	**$1,856**	V1
	10	16	CFW080160TGN4A1Z	Yes	B	13.4 x 8.5 x 8.5	18	**$2,144**	V1
	15	24	CFW080240TGN4A1Z	Yes	B	13.4 x 8.5 x 8.5	18	**$2,876**	V1
	20	30	CFW080300TGN4A1Z	Yes	B	13.4 x 8.5 x 8.5	18	**$3,474**	V1
575 Vac [3]	**Input Power Supply: Three-Phase 500-600 Vac**								
	1	1.7	CFW080017THN4A1Z	Yes	B	13.4 x 8.5 x 8.5	18	**$1,259**	V1
	2	3.0	CFW080030THN4A1Z	Yes	B	13.4 x 8.5 x 8.5	18	**$1,421**	V1
	3	4.3	CFW080043THN4A1Z	Yes	B	13.4 x 8.5 x 8.5	18	**$1,485**	V1
	5	7.0	CFW080070THN4A1Z	Yes	B	13.4 x 8.5 x 8.5	18	**$1,767**	V1
	7 1/2	10	CFW080100THN4A1Z	Yes	B	13.4 x 8.5 x 8.5	18	**$2,077**	V1
	10	12	CFW080120THN4A1Z	Yes	B	13.4 x 8.5 x 8.5	18	**$2,388**	V1

Notes:
1) "HP" rating based on "average FLA values". Use as a guide only.
2) Motor FLA may vary with speed and manufacturer. ALWAYS compare motor FLA to Nominal AMPS of drive.
3) All 575V drives are non-stocked items. Consult WEG for availability.
For other technical data please refer to WEG product manual.

CFW08 WASH

Options and Accessories

Type	Catalog Number	Description	List Price	Multiplier
Keypad	HMI-CFW08-RS	NEMA12 Remote Keypad (requires MIS-CFW08-RS & cable)	$135	V1
	MIS-CFW08-RS	Remote Keypad Interface	$64	V1
	TCL-CFW08	Keypad Cover	$13	V1
	CAB-RS-1	3.3 ft (1m) Remote Keypad Cable	$23	V1
	CAB-RS-2	6.6 ft (2m) Remote Keypad Cable	$31	V1
	CAB-RS-3	9.9 ft (3m) Remote Keypad Cable	$41	V1
	CAB-RS-5	16 ft (3m) Remote Keypad Cable	$51	V1
	CAB-RS-7.5	25 ft (7.5m) Remote Keypad Cable	$62	V1
	CAB-RS-10	33 ft (10m) Remote Keypad Cable	$72	V1
I/O	KAC-120-CFW08	120VAC Digital Input Adaptor Board (4 inputs)	$145	V1
Communication	KCS-CFW08	RS-232 Serial Comm. Module (mounted in place of keypad)	$97	V1
	MIW-02	RS-232/485 Converter (mounted externally)	$221	V1
	KSD-CFW08	PC Communication Kit	$124	V1
	KRS-485-CFW08	Interface for RS-485 Communication	$186	V1
DC Power Supply	KDC-24V-CFW08	24VDC power supply with standard CFW08 HMI integrated	$177	V1
	KDC-24VR-CFW08	24VDC power supply with interface for remote keypad	$211	V1
Remote Oper. Station	CSW-SP3PBS	Remote Operator Station-includes 22mm Start PB, Stop PB, 1-NC and 1-NO contact block, 5k-ohm Potentiometer and legends (replaces CFW-REM)	$460	Z5
	CSW30-SP3PBS	Remote Operator Station-includes 30mm Start PB, Stop PB, 1-NC and 1-NO contact block, 5k-ohm Potentiometer and legends (replaces CFW-REM)	$535	Z5

Data subject to change without notice.

Dynamic Braking Resistors for CFW08 WASH

10% Duty Cycle

Motor Voltage	Motor HP [1]	CFW08 Catalog Number	WEG DB Resistor Catalog Number [2]	Ohms	Watts	List Price	Multiplier
230 Vac	**Input Power Supply: Single or Three-Phase 200-240 Vac**						
	2	CFW080073BDN4A1Z	**CFDB39-224**	39	224	**$183**	V1
	3	CFW080100BDN4A1Z	**CFDB27-298**	27	298	**$183**	V1
	5	CFW080160TDN4A1Z	**CFDB22-373**	22	373	**$183**	V1
	7 1/2	CFW080220TDN4A1Z	**CFDB15-560**	15	560	**$319**	V1
	10	CFW080280TDN4A1Z	**CFDB10-746**	10	746	**$319**	V1
460 Vac	**Input Power Supply: Three-Phase 380-480 Vac**						
	1	CFW080027TGN1A1Z	**CFDB120-298**	120	298	**$183**	V1
	2	CFW080043TGN1A1Z	**CFDB120-298**	120	298	**$183**	V1
	3	CFW080065TGN1A1Z	**CFDB100-224**	100	224	**$183**	V1
	5	CFW080100TGN1A1Z	**CFDB47-746**	47	746	**$319**	V1
	7 1/2	CFW080130TGN1A1Z	**CFDB33-746**	33	746	**$319**	V1
	10	CFW080160TGN1A1Z	**CFDB33-746**	33	746	**$319**	V1
	15	CFW080240TGN1A1Z	**CFDB22-1119**	22	1119	**$481**	V1
	20	CFW080300TGN1A1Z	**CFDB18-1492**	18	1492	**$638**	V1

Notes:
1) "HP" rating based on "average FLA values". Use as a guide only.
2) Dynamic Braking Resistors are non-stock items. Consult WEG for availability

CFW08 WASH

Technical Data

Power Supply	Voltage	Single Phase or Three Phase	200-240V (+10%, -15%)
		Three phase	380-480V (+10%, -15%)
	Frequency	50 / 60Hz +/- 2Hz	
	Displacement Power Factor (Cos)	Greater than 0.98	
Enclosure	Degree of Protection	NEMA 4	
Control	Control Modes	Volts per Hertz (Scalar)	
		Sensorless Voltage Vector VVW	
	Power Output	Sinusoidal PWM (Space Vector Modulation)	
		IGBT Transistors	
	Switching Frequency	2.5, 5, 10 or 15kHz	
	Frequency Range	0-300 Hz	
	Overload Capacity	150% for 60 seconds, repeatable every 10 min.	
Control Inputs	4 programmable isolated digital inputs, NPN or 24Vdc logic (PNP)		
	2 programmable differential analog inputs; programmable for current or voltage Can be set as DI or as PTC input (0-10V, 4-20mA or 0-20mA)		
Control Outputs	2 programmable relay outputs: One NO (Form A) and one NC (Form B): 240 V / 0.5 A		
	1 Output with independent NO and NC at a same common		
	1 Analog Output; programmable for voltage (0-10V) or current (0-20 mA or 4-20 mA) and with 0.25% linearity error		
Communication	Serial	Optional RS-232 serial interface, RS-485 with external RS-232/485 converter	
	Field Bus	Modbus RTU with external RS-232/485 converter	
Safety	Protections	Motor over current	DC link over voltage
		Motor overload	DC link under voltage
		Output phase-to-phase short circuit	Drive over temperature
		Output phase-to-ground short circuit	External fault
		Programming error	
Ambient	Temperature	32° - 104°F (40°C), up to 122°F (50°C) with 2% / 1.8°F (1°C) output current derating	
	Humidity	5-90% Non Condensing	
	Altitude	0-3300 ft (1000m), up to 13,200 ft (4000m) with 1% output current derating per 330ft (100m) above 3300 ft (1000m).	
Regulatory Conformance	EMC Directive 89 / 336 / EEC	Electromagnetic compatibility – Industrial Environment EMC Emission and Immunity with optional filter	
	ENC61800-3		
	LVD 73/23/EEC	Low Voltage Directive	
	UL 508 C	Power Conversion Equipment	
Special Functions	Linear and "S" ramp accel and decel, local/remote control, FWD/REV selection, DC braking, manual and auto torque boost, motor slip compensation, electronic pot, two skip frequencies, maximum and minimum adjustable frequency limits, adjustable output current, PID Controller		
Keypad	4 digit display, 2 indicator LEDs and 8 keys		
	Readouts for: output frequency (Hz), output current (A), output voltage (V), motor torque (%) in vector mode, DC bus voltage (V), value proportional to frequency (Ex.: RPM), heatsink temperature, fault and status messages		
Mounting	Surface mounting with screws.		

Data subject to change without notice.

EDP11

The Enclosed VFD Panel is an industrial general purpose AC motor control and protection package. It is designed for simple and quick installation and start-up, requiring only input power and output motor connections. There are two enclosure variants available such as NEMA 12 ventilated and NEMA 3R for Outdoor Installations.

The Enclosed VFD Panel is built to complement the ruggedness and reliability of WEG motors, providing a complete, simple, and cost effective AC motor control, monitor and protection solution.

NEMA 12 Features

- CFW11 Drive
- Indoor Rated
- Wall mounted
- Circuit Breaker with through door handle
- CFW11 VFD (Dual DC choke built-in)
- Fused 480V/120V CPT
- Internal Fan
- Heat sink through the back
- Motor Terminal Block
- Door mounted keypad
- Start / Stop Pushbuttons
- Run/Fault Pilot Lights
- Keypad cover - same as GPH2
- Drive and controls mounted in NEMA 4 section of panel; heat sink is external and rated NEMA 12

NEMA 3R Features

- NEMA 12 features plus:
- Outdoor Rated
- ED1-ED4: non-ventilated and wall mounted
- ED5: non-ventilated and floor mounted
- ED6-ED9: ventilated and floor mounted
- Weather kit (rain/sun/snow shield)
- Panel space heater + thermostat
- Lightning arrestor
- Service entrance rated

3-Contactor Bypass Option

- NEMA 12 or NEMA 3R version
- AC3 full rated by-pass contactor
- Drive input and output contactors
- Motor overload relay
- E-Stop Mushroom style pushbutton
- Enclosure size to be determined

HOA/POT/TB Option

- HOA = Hand-OFF-Auto
- POT = Potentiomenter for speed reference of PID setpoint
- TB = Auxiliary control terminal block for remote command

EDP11 Catalog Number Sequence

EDP11	S	024	G	N12	1	1	0	0	0

Configuration
S = Standard

Rated Current
003 = 3 Amps
007 = 7 Amps
024 = 24 Amps
045 = 45 Amps
070 = 70 Amps
105 = 105 Amps
180 = 180 Amps
211 = 211 Amps
370 = 370 Amps
515 = 515 Amps
720 = 720 Amps
1141 = 1141 Amps

Operator Devices
0 = No HOA, Pot, TB
1 = HOA, Pot, TB

3-Contactor Bypass*
0 = No Bypass
1 = With Bypass

Enclosure
N01 = NEMA 1
N12 = NEMA 12
N3R = NEMA 3R

Supply Voltage
D = 200-240 Vac
G = 460-480 Vac

For detailed specifications, data sheets, drawings and performance curves visit http://www.weg.net
Data subject to change without notice.

Enclosed VFD Panel - NEMA 12 Enclosure (no By-Pass)

Motor Voltage	ND / VT1		HD / CT1		Catalog Number	Braking Transistor	Drive Frame Size	Enclosure Frame Size [4]	Dimensions (in.) HxWxD [7]	Approx. Weight (lbs.) [7]	List Price	Multiplier
	Motor HP [2]	Drive Amps [3]	Motor HP [2]	Drive Amps [3]								
230 Vac	Input Power Supply: Three-Phase 220-240 Vac with Dynamic Braking Transistor											
	2	7.0	1 1/2	5.5	EDP11S007DN12	Yes	A	ED1	24 x 20 x 11.5	36	$6,690	V1
	3	10	2	8.0	EDP11S010DN12	Yes	A	ED1	24 x 20 x 11.5	36	$6,756	V1
	5	13	3	11	EDP11S013DN12	Yes	A	ED1	24 x 20 x 11.5	41	$6,855	V1
	5	16	5	13	EDP11S016DN12	Yes	A	ED1	24 x 20 x 11.5	42	$7,123	V1
	7 1/2	24	7 1/2	20	EDP11S024DN12	Yes	B	ED1	24 x 20 x 11.5	56	$7,664	V1
	10	28	10	24	EDP11S028DN12	Yes	B	ED1	24 x 20 x 11.5	56	$8,408	V1
	10	33.5	10	28	EDP11S033DN12	Yes	B	ED1	24 x 20 x 11.5	56	$9,108	V1
	15	45	15	36	EDP11S045DN12	Yes	C	ED2	30 x 24 x 14	88	$10,214	V1
	20	54	20	45	EDP11S054DN12	Yes	C	ED2	30 x 24 x 14	90	$11,491	V1
	25	70	20	56	EDP11S070DN12	Yes	C	ED2	30 x 24 x 14	100	$12,162	V1
	30	86	25	70	EDP11S086DN12	Yes	D	ED3	36 x 30 x 14	230	$14,321	V1
	40	105	30	86	EDP11S105DN12	Yes	D	ED3	36 x 30 x 14	240	$17,164	V1
	50	142	40	115	EDP11S142DN12	No	E [5]	ED4	48 x 30 x 17.5	300	$19,793	V1
	60	180	50	142	EDP11S180DN12	No	E [5]	ED4	48 x 30 x 17.5	300	$25,116	V1
	75	211	60	180	EDP11S211DN12	No	E [5]	ED4	48 x 30 x 17.5	300	$28,326	V1
460 Vac	Input Power Supply: Three-Phase 460-480 Vac with Dynamic Braking Transistor											
	2	3.6	2	3.6	EDP11S003GN12	Yes	A	ED1	24 x 20 x 11.5	36	$6,510	V1
	3	5.0	3	5.0	EDP11S005GN12	Yes	A	ED1	24 x 20 x 11.5	36	$6,626	V1
	5	7.0	3	5.5	EDP11S007GN12	Yes	A	ED1	24 x 20 x 11.5	41	$6,690	V1
	7 1/2	10	5	10	EDP11S010GN12	Yes	A	ED1	24 x 20 x 11.5	42	$6,756	V1
	10	13.5	7 1/2	11	EDP11S013GN12	Yes	A	ED1	24 x 20 x 11.5	42	$6,855	V1
	10	17	10	13.5	EDP11S017GN12	Yes	B	ED1	24 x 20 x 11.5	56	$7,269	V1
	15	24	10	19	EDP11S024GN12	Yes	B	ED1	24 x 20 x 11.5	56	$7,821	V1
	20	31	15	25	EDP11S031GN12	Yes	B	ED1	24 x 20 x 11.5	56	$8,580	V1
	25	38	20	33	EDP11S038GN12	Yes	C	ED2	30 x 24 x 14	90	$9,293	V1
	30	45	25	38	EDP11S045GN12	Yes	C	ED2	30 x 24 x 14	104	$10,422	V1
	40	58.5	30	47	EDP11S058GN12	Yes	C	ED2	30 x 24 x 14	110	$12,026	V1
	50/60	70.5	40	61	EDP11S070GN12	Yes	D	ED3	36 x 30 x 14	240	$12,729	V1
	75	88	50	73	EDP11S088GN12	Yes	D	ED3	36 x 30 x 14	245	$14,988	V1
	75	105	75	88	EDP11S105GN12	No	E [5]	ED4	48 x 30 x 17.5	300	$17,964	V1
	100/125	142	75	115	EDP11S142GN12	No	E [5]	ED4	48 x 30 x 17.5	300	$20,715	V1
	150	180	100	142	EDP11S180GN12	No	E [5]	ED4	48 x 30 x 17.5	300	$26,286	V1
	175	211	125	180	EDP11S211GN12	No	E [5]	ED4	48 x 30 x 17.5	300	$29,645	V1
	200	242	150	211	EDP11S242GN12	No	F [5]	ED6	83 x 32 x 37	700	$40,755	V1
	250	312	200	242	EDP11S312GN12	No	F [5]	ED6	83 x 32 x 37	720	$45,114	V1
	300	370	250	312	EDP11S370GN12	No	F [5]	ED6	83 x 32 x 37	750	$47,743	V1
	400	477	300	370	EDP11S477GN12	No	F [5]	ED6	83 x 32 x 37	775	$54,585	V1
	450	515	400	477	EDP11S515GN12	No	G [5]	ED8	83 x 56 x 37	1100	$66,023	V1
	500	601	450	515	EDP11S601GN12	No	G [5]	ED8	83 x 56 x 37	1120	$71,875	V1
	600	720	500	560	EDP11S720GN12	No	G [6]	ED8	83 x 56 x 37	1150	$88,556	V1

Notes:
1) CT = Constant Torque, 150% overload / 60 sec.; VT = Variable Torque (Quadratic Load), 110% overload / 60 sec.
2) "HP" rating based on "average FLA values". Use as a guide only.
3) Motor FLA may vary with speed and manufacturer. ALWAYS compare motor FLA to Nominal AMPS of drive.
4) ED1 - ED5 enclosures are non-ventilated and wall-mounted; ED6 - ED9 enclosures are ventilated and floor mounted.
5) Maximum 45°C ambient temperature without derating
6) Maximum 40°C ambient temperature without derating
7) Dimensions and weights are for estimating purposes only. Only use "AS BUILT" drawings for construction. For other technical data please refer to WEG product manual.

EDP11 - ENGINEERED DRIVE PANEL

Enclosed VFD Panel - NEMA 12 Enclosure with By-Pass

Motor Voltage	ND / VT1		HD / CT1		Catalog Number	Braking Transistor	Drive Frame Size	Enclosure Frame Size [4]	Dimensions (in.) HxWxD [7]	Approx. Weight (lbs.) [7]	List Price	Multiplier
	Motor HP [2]	Drive Amps [3]	Motor HP [2]	Drive Amps [3]								
230 Vac	**Input Power Supply: Three-Phase 220-240 Vac with Dynamic Braking Transistor**											
	2	7.0	1 1/2	5.5	EDP11S007DN1210000	Yes	A	ED2	30 x 24 x 14	36	**$8,200**	V1
	3	10	2	8.0	EDP11S010DN1210000	Yes	A	ED2	30 x 24 x 14	36	**$8,276**	V1
	5	13	3	11	EDP11S013DN1210000	Yes	A	ED2	30 x 24 x 14	41	**$8,375**	V1
	5	16	5	13	EDP11S016DN1210000	Yes	A	ED2	30 x 24 x 14	42	**$8,643**	V1
	7 1/2	24	7 1/2	20	EDP11S024DN1210000	Yes	B	ED2	30 x 24 x 14	56	**$9,262**	V1
	10	28	10	24	EDP11S028DN1210000	Yes	B	ED2	30 x 24 x 14	56	**$10,200**	V1
	10	33.5	10	28	EDP11S033DN1210000	Yes	B	ED2	30 x 24 x 14	56	**$11,011**	V1
	15	45	15	36	EDP11S045DN1210000	Yes	C	ED3	36 x 30 x 14	88	**$12,316**	V1
	20	54	20	45	EDP11S054DN1210000	Yes	C	ED3	36 x 30 x 14	90	**$13,738**	V1
	25	70	20	56	EDP11S070DN1210000	Yes	C	ED3	36 x 30 x 14	100	**$14,857**	V1
	30	86	25	70	EDP11S086DN1210000	Yes	D	ED4	48 x 30 x 17.5	230	**$17,016**	V1
	40	105	30	86	EDP11S105DN1210000	Yes	D	ED4	48 x 30 x 17.5	240	**$20,052**	V1
	50	142	40	115	EDP11S142DN1210000	No	E [5]	ED5	72 x 36 x 18	300	**$24,778**	V1
	60	180	50	142	EDP11S180DN1210000	No	E [5]	ED5	72 x 36 x 18	300	**$31,111**	V1
	75	211	60	180	EDP11S211DN1210000	No	E [5]	ED5	72 x 36 x 18	300	**$35,651**	V1
460 Vac	**Input Power Supply: Three-Phase 460-480 Vac with Dynamic Braking Transistor**											
	2	3.6	2	3.6	EDP11S003GN1210000	Yes	A	ED2	30 x 24 x 14	36	**$8,020**	V1
	3	5.0	3	5.0	EDP11S005GN1210000	Yes	A	ED2	30 x 24 x 14	36	**$8,136**	V1
	5	7.0	3	5.5	EDP11S007GN1210000	Yes	A	ED2	30 x 24 x 14	41	**$8,200**	V1
	7 1/2	10	5	10	EDP11S010GN1210000	Yes	A	ED2	30 x 24 x 14	42	**$8,276**	V1
	10	13.5	7 1/2	11	EDP11S013GN1210000	Yes	A	ED2	30 x 24 x 14	42	**$8,375**	V1
	10	17	10	13.5	EDP11S017GN1210000	Yes	B	ED2	30 x 24 x 14	56	**$8,867**	V1
	15	24	10	19	EDP11S024GN1210000	Yes	B	ED2	30 x 24 x 14	56	**$9,613**	V1
	20	31	15	25	EDP11S031GN1210000	Yes	B	ED2	30 x 24 x 14	56	**$10,483**	V1
	25	38	20	33	EDP11S038GN1210000	Yes	C	ED3	36 x 30 x 14	90	**$11,395**	V1
	30	45	25	38	EDP11S045GN1210000	Yes	C	ED3	36 x 30 x 14	104	**$12,669**	V1
	40	58.5	30	47	EDP11S058GN1210000	Yes	C	ED3	36 x 30 x 14	110	**$14,721**	V1
	50/60	70.5	40	61	EDP11S070GN1210000	Yes	D	ED4	48 x 30 x 17.5	240	**$15,424**	V1
	75	88	50	73	EDP11S088GN1210000	Yes	D	ED4	48 x 30 x 17.5	245	**$17,876**	V1
	75	105	75	88	EDP11S105GN1210000	No	E [5]	ED5	72 x 36 x 18	300	**$21,308**	V1
	100/125	142	75	115	EDP11S142GN1210000	No	E [5]	ED5	72 x 36 x 18	300	**$25,700**	V1
	150	180	100	142	EDP11S180GN1210000	No	E [5]	ED5	72 x 36 x 18	300	**$32,281**	V1
	175	211	125	180	EDP11S211GN1210000	No	E [5]	ED5	72 x 36 x 18	300	**$36,970**	V1
	200	242	150	211	EDP11S242GN1210000	No	F [5]	ED7	83 x 64 x 37	700	**$53,334**	V1
	250	312	200	242	EDP11S312GN1210000	No	F [5]	ED7	83 x 64 x 37	720	**$59,257**	V1
	300	370	250	312	EDP11S370GN1210000	No	F [5]	ED7	83 x 64 x 37	750	**$62,146**	V1
	400	477	300	370	EDP11S477GN1210000	No	F [5]	ED7	83 x 64 x 37	775	**$76,618**	V1
	450	515	400	477	EDP11S515GN1210000	No	G [5]	ED9	83 x 95 x 37	1100	**$88,056**	V1
	500	601	450	515	EDP11S601GN1210000	No	G [5]	ED9	83 x 95 x 37	1120	**$99,447**	V1
	600	720	500	560	EDP11S720GN1210000	No	G [6]	ED9	83 x 95 x 37	1150	**$119,944**	V1

Notes:
1) CT = Constant Torque, 150% overload / 60 sec.; VT = Variable Torque (Quadratic Load), 110% overload / 60 sec.
2) "HP" rating based on "average FLA values". Use as a guide only.
3) Motor FLA may vary with speed and manufacturer. ALWAYS compare motor FLA to Nominal AMPS of drive.
4) ED1 - ED5 enclosures are non-ventilated and wall-mounted; ED6 - ED9 enclosures are ventilated and floor mounted.
5) Maximum 45°C ambient temperature without derating
6) Maximum 40°C ambient temperature without derating
7) Dimensions and weights are for estimating purposes only. Only use "AS BUILT" drawings for construction.
For other technical data please refer to WEG product manual.

Enclosed VFD Panel - NEMA 12 Enclosure (no By-Pass) with HOA / Pot / TB

Motor Voltage	ND / VT1		HD / CT1		Catalog Number	Braking Transistor	Drive Frame Size	Enclosure Frame Size [4]	Dimensions (in.) HxWxD [7]	Approx. Weight (lbs.) [7]	List Price	Multiplier
	Motor HP [2]	Drive Amps [3]	Motor HP [2]	Drive Amps [3]								
230 Vac	Input Power Supply: Three-Phase 220-240 Vac with Dynamic Braking Transistor											
	2	7.0	1 1/2	5.5	EDP11S007DN1201000	Yes	A	ED1	30 x 24 x 14	36	$7,453	V1
	3	10	2	8.0	EDP11S010DN1201000	Yes	A	ED1	30 x 24 x 14	36	$7,519	V1
	5	13	3	11	EDP11S013DN1201000	Yes	A	ED1	30 x 24 x 14	41	$7,618	V1
	5	16	5	13	EDP11S016DN1201000	Yes	A	ED1	30 x 24 x 14	42	$7,886	V1
	7 1/2	24	7 1/2	20	EDP11S024DN1201000	Yes	B	ED1	30 x 24 x 14	56	$8,427	V1
	10	28	10	24	EDP11S028DN1201000	Yes	B	ED1	30 x 24 x 14	56	$9,171	V1
	10	33.5	10	28	EDP11S033DN1201000	Yes	B	ED1	30 x 24 x 14	56	$9,871	V1
	15	45	15	36	EDP11S045DN1201000	Yes	C	ED2	36 x 30 x 14	88	$10,977	V1
	20	54	20	45	EDP11S054DN1201000	Yes	C	ED2	36 x 30 x 14	90	$12,254	V1
	25	70	20	56	EDP11S070DN1201000	Yes	C	ED2	36 x 30 x 14	100	$12,925	V1
	30	86	25	70	EDP11S086DN1201000	Yes	D	ED3	48 x 30 x 17.5	230	$15,084	V1
	40	105	30	86	EDP11S105DN1201000	Yes	D	ED3	48 x 30 x 17.5	240	$17,927	V1
	50	142	40	115	EDP11S142DN1201000	No	E [5]	ED4	72 x 36 x 18	300	$20,556	V1
	60	180	50	142	EDP11S180DN1201000	No	E [5]	ED4	72 x 36 x 18	300	$25,879	V1
	75	211	60	180	EDP11S211DN1201000	No	E [5]	ED4	72 x 36 x 18	300	$29,089	V1
460 Vac	Input Power Supply: Three-Phase 460-480 Vac with Dynamic Braking Transistor											
	2	3.6	2	3.6	EDP11S003GN1201000	Yes	A	ED1	30 x 24 x 14	36	$7,273	V1
	3	5.0	3	5.0	EDP11S005GN1201000	Yes	A	ED1	30 x 24 x 14	36	$7,389	V1
	5	7.0	3	5.5	EDP11S007GN1201000	Yes	A	ED1	30 x 24 x 14	41	$7,453	V1
	7 1/2	10	5	10	EDP11S010GN1201000	Yes	A	ED1	30 x 24 x 14	42	$7,519	V1
	10	13.5	7 1/2	11	EDP11S013GN1201000	Yes	A	ED1	30 x 24 x 14	42	$7,618	V1
	10	17	10	13.5	EDP11S017GN1201000	Yes	B	ED1	30 x 24 x 14	56	$8,032	V1
	15	24	10	19	EDP11S024GN1201000	Yes	B	ED1	30 x 24 x 14	56	$8,584	V1
	20	31	15	25	EDP11S031GN1201000	Yes	B	ED1	30 x 24 x 14	56	$9,343	V1
	25	38	20	33	EDP11S038GN1201000	Yes	C	ED2	36 x 30 x 14	90	$10,056	V1
	30	45	25	38	EDP11S045GN1201000	Yes	C	ED2	36 x 30 x 14	104	$11,185	V1
	40	58.5	30	47	EDP11S058GN1201000	Yes	C	ED2	36 x 30 x 14	110	$12,789	V1
	50/60	70.5	40	61	EDP11S070GN1201000	Yes	D	ED3	48 x 30 x 17.5	240	$13,492	V1
	75	88	50	73	EDP11S088GN1201000	Yes	D	ED3	48 x 30 x 17.5	245	$15,751	V1
	75	105	75	88	EDP11S105GN1201000	No	E [5]	ED4	48 x 30 x 17.5	300	$18,727	V1
	100/125	142	75	115	EDP11S142GN1201000	No	E [5]	ED4	48 x 30 x 17.5	300	$21,478	V1
	150	180	100	142	EDP11S180GN1201000	No	E [5]	ED4	48 x 30 x 17.5	300	$27,049	V1
	175	211	125	180	EDP11S211GN1201000	No	E [5]	ED4	48 x 30 x 17.5	300	$30,408	V1
	200	242	150	211	EDP11S242GN1201000	No	F [5]	ED6	83 x 64 x 37	700	$41,613	V1
	250	312	200	242	EDP11S312GN1201000	No	F [5]	ED6	83 x 64 x 37	720	$45,972	V1
	300	370	250	312	EDP11S370GN1201000	No	F [5]	ED6	83 x 64 x 37	750	$48,601	V1
	400	477	300	370	EDP11S477GN1201000	No	F [5]	ED6	83 x 64 x 37	775	$55,443	V1
	450	515	400	477	EDP11S515GN1201000	No	G [5]	ED8	83 x 95 x 37	1100	$66,881	V1
	500	601	450	515	EDP11S601GN1201000	No	G [5]	ED8	83 x 95 x 37	1120	$72,733	V1
	600	720	500	560	EDP11S720GN1201000	No	G [6]	ED8	83 x 95 x 37	1150	$89,414	V1

Notes:
1) CT = Constant Torque, 150% overload / 60 sec.; VT = Variable Torque (Quadratic Load), 110% overload / 60 sec.
2) "HP" rating based on "average FLA values". Use as a guide only.
3) Motor FLA may vary with speed and manufacturer. ALWAYS compare motor FLA to Nominal AMPS of drive.
4) ED1 - ED5 enclosures are non-ventilated and wall-mounted; ED6 - ED9 enclosures are ventilated and floor mounted.
5) Maximum 45°C ambient temperature without derating
6) Maximum 40°C ambient temperature without derating
7) Dimensions and weights are for estimating purposes only. Only use "AS BUILT" drawings for construction.
For other technical data please refer to WEG product manual.

EDP11 - ENGINEERED DRIVE PANEL

Enclosed VFD Panel - NEMA 12 Enclosure with By-Pass and HOA / Pot / TB

Motor Voltage	ND / VT1		HD / CT1		Catalog Number	Braking Transistor	Drive Frame Size	Enclosure Frame Size [4]	Dimensions (in.) HxWxD [7]	Approx. Weight (lbs.) [7]	List Price	Multiplier
	Motor HP [2]	Drive Amps [3]	Motor HP [2]	Drive Amps [3]								
	Input Power Supply: Three-Phase 220-240 Vac with Dynamic Braking Transistor											
230 Vac	2	7.0	1 1/2	5.5	EDP11S007DN1211000	Yes	A	ED2	30 x 24 x 14	36	$8,963	V1
	3	10	2	8.0	EDP11S010DN1211000	Yes	A	ED2	30 x 24 x 14	36	$9,039	V1
	5	13	3	11	EDP11S013DN1211000	Yes	A	ED2	30 x 24 x 14	41	$9,138	V1
	5	16	5	13	EDP11S016DN1211000	Yes	A	ED2	30 x 24 x 14	42	$9,406	V1
	7 1/2	24	7 1/2	20	EDP11S024DN1211000	Yes	B	ED2	30 x 24 x 14	56	$10,025	V1
	10	28	10	24	EDP11S028DN1211000	Yes	B	ED2	30 x 24 x 14	56	$10,963	V1
	10	33.5	10	28	EDP11S033DN1211000	Yes	B	ED2	30 x 24 x 14	56	$11,774	V1
	15	45	15	36	EDP11S045DN1211000	Yes	C	ED3	36 x 30 x 14	88	$13,079	V1
	20	54	20	45	EDP11S054DN1211000	Yes	C	ED3	36 x 30 x 14	90	$14,501	V1
	25	70	20	56	EDP11S070DN1211000	Yes	C	ED3	36 x 30 x 14	100	$15,620	V1
	30	86	25	70	EDP11S086DN1211000	Yes	D	ED4	48 x 30 x 17.5	230	$17,779	V1
	40	105	30	86	EDP11S105DN1211000	Yes	D	ED4	48 x 30 x 17.5	240	$20,815	V1
	50	142	40	115	EDP11S142DN1211000	No	E [5]	ED5	72 x 36 x 18	300	$25,541	V1
	60	180	50	142	EDP11S180DN1211000	No	E [5]	ED5	72 x 36 x 18	300	$31,874	V1
	75	211	60	180	EDP11S211DN1211000	No	E [5]	ED5	72 x 36 x 18	300	$36,414	V1
	Input Power Supply: Three-Phase 460-480 Vac with Dynamic Braking Transistor											
460 Vac	2	3.6	2	3.6	EDP11S003GN1211000	Yes	A	ED2	30 x 24 x 14	36	$8,783	V1
	3	5.0	3	5.0	EDP11S005GN1211000	Yes	A	ED2	30 x 24 x 14	36	$8,899	V1
	5	7.0	3	5.5	EDP11S007GN1211000	Yes	A	ED2	30 x 24 x 14	41	$8,963	V1
	7 1/2	10	5	10	EDP11S010GN1211000	Yes	A	ED2	30 x 24 x 14	42	$9,039	V1
	10	13.5	7 1/2	11	EDP11S013GN1211000	Yes	A	ED2	30 x 24 x 14	42	$9,138	V1
	10	17	10	13.5	EDP11S017GN1211000	Yes	B	ED2	30 x 24 x 14	56	$9,630	V1
	15	24	10	19	EDP11S024GN1211000	Yes	B	ED2	30 x 24 x 14	56	$10,376	V1
	20	31	15	25	EDP11S031GN1211000	Yes	B	ED2	30 x 24 x 14	56	$11,246	V1
	25	38	20	33	EDP11S038GN1211000	Yes	C	ED3	36 x 30 x 14	90	$12,158	V1
	30	45	25	38	EDP11S045GN1211000	Yes	C	ED3	36 x 30 x 14	104	$13,432	V1
	40	58.5	30	47	EDP11S058GN1211000	Yes	C	ED3	36 x 30 x 14	110	$15,484	V1
	50/60	70.5	40	61	EDP11S070GN1211000	Yes	D	ED4	48 x 30 x 17.5	240	$16,187	V1
	75	88	50	73	EDP11S088GN1211000	Yes	D	ED4	48 x 30 x 17.5	245	$18,639	V1
	75	105	75	88	EDP11S105GN1211000	No	E [5]	ED5	72 x 36 x 18	300	$22,071	V1
	100/125	142	75	115	EDP11S142GN1211000	No	E [5]	ED5	72 x 36 x 18	300	$26,463	V1
	150	180	100	142	EDP11S180GN1211000	No	E [5]	ED5	72 x 36 x 18	300	$33,044	V1
	175	211	125	180	EDP11S211GN1211000	No	E [5]	ED5	72 x 36 x 18	300	$37,733	V1
	200	242	150	211	EDP11S242GN1211000	No	F [5]	ED7	83 x 64 x 37	700	$54,097	V1
	250	312	200	242	EDP11S312GN1211000	No	F [5]	ED7	83 x 64 x 37	720	$60,115	V1
	300	370	250	312	EDP11S370GN1211000	No	F [5]	ED7	83 x 64 x 37	750	$63,004	V1
	400	477	300	370	EDP11S477GN1211000	No	F [5]	ED7	83 x 64 x 37	775	$77,476	V1
	450	515	400	477	EDP11S515GN1211000	No	G [5]	ED9	83 x 95 x 37	1100	$88,914	V1
	500	601	450	515	EDP11S601GN1211000	No	G [5]	ED9	83 x 95 x 37	1120	$100,305	V1
	600	720	500	560	EDP11S720GN1211000	No	G [6]	ED9	83 x 95 x 37	1150	$120,802	V1

Notes:
1) CT = Constant Torque, 150% overload / 60 sec.; VT = Variable Torque (Quadratic Load), 110% overload / 60 sec.
2) "HP" rating based on "average FLA values". Use as a guide only.
3) Motor FLA may vary with speed and manufacturer. ALWAYS compare motor FLA to Nominal AMPS of drive.
4) ED1 - ED5 enclosures are non-ventilated and wall-mounted; ED6 - ED9 enclosures are ventilated and floor mounted.
5) Maximum 45°C ambient temperature without derating
6) Maximum 40°C ambient temperature without derating
7) Dimensions and weights are for estimating purposes only. Only use "AS BUILT" drawings for construction. For other technical data please refer to WEG product manual.

For detailed specifications, data sheets, drawings and performance curves visit http://www.weg.net

Data subject to change without notice.

Enclosed VFD Panel - NEMA 3R Enclosure (no By-Pass)

Motor Voltage	ND / VT1		HD / CT1		Catalog Number	Braking Transistor	Drive Frame Size	Enclosure Frame Size [4]	Dimensions (in.) HxWxD [7]	Approx. Weight (lbs.) [7]	List Price	Multiplier
	Motor HP [2]	Drive Amps [3]	Motor HP 2	Drive Amps [3]								
	Input Power Supply: Three-Phase 220-240 Vac with Dynamic Braking Transistor											
230 Vac	2	7.0	1 1/2	5.5	EDP11S007DN3R	Yes	A [5]	ED1	26.5 x 20 x 11.5	36	$8,521	V1
	3	10	2	8.0	EDP11S010DN3R	Yes	A [5]	ED1	26.5 x 20 x 11.5	36	$8,587	V1
	5	13	3	11	EDP11S013DN3R	Yes	A [5]	ED1	26.5 x 20 x 11.5	41	$8,686	V1
	5	16	5	13	EDP11S016DN3R	Yes	A [5]	ED1	26.5 x 20 x 11.5	42	$8,918	V1
	7 1/2	24	7 1/2	20	EDP11S024DN3R	Yes	B [5]	ED1	26.5 x 20 x 11.5	56	$9,459	V1
	10	28	10	24	EDP11S028DN3R	Yes	B [5]	ED1	26.5 x 20 x 11.5	56	$10,202	V1
	10	33.5	10	28	EDP11S033DN3R	Yes	B [5]	ED1	26.5 x 20 x 11.5	56	$10,902	V1
	15	45	15	36	EDP11S045DN3R	Yes	C [5]	ED2	32.5 x 24 x 14	88	$12,122	V1
	20	54	20	45	EDP11S054DN3R	Yes	C [5]	ED2	32.5 x 24 x 14	90	$13,400	V1
	25	70	20	56	EDP11S070DN3R	Yes	C [5]	ED2	32.5 x 24 x 14	100	$14,162	V1
	30	86	25	70	EDP11S086DN3R	Yes	D [5]	ED3	38.5 x 30 x 14	230	$16,320	V1
	40	105	30	86	EDP11S105DN3R	Yes	D [5]	ED3	38.5 x 30 x 14	240	$19,338	V1
	50	142	40	115	EDP11S142DN3R	No	E [6]	ED4	50.5 x 30 x 17.5	300	$21,967	V1
	60	180	50	142	EDP11S180DN3R	No	E [6]	ED4	50.5 x 30 x 17.5	300	$27,290	V1
	75	211	60	180	EDP11S211DN3R	No	E [6]	ED4	50.5 x 30 x 17.5	300	$30,499	V1
	Input Power Supply: Three-Phase 460-480 Vac with Dynamic Braking Transistor											
460 Vac	2	3.6	2	3.6	EDP11S003GN3R	Yes	A [5]	ED1	26.5 x 20 x 11.5	36	$8,341	V1
	3	5.0	3	5.0	EDP11S005GN3R	Yes	A [5]	ED1	26.5 x 20 x 11.5	36	$8,457	V1
	5	7.0	3	5.5	EDP11S007GN3R	Yes	A [5]	ED1	26.5 x 20 x 11.5	41	$8,521	V1
	7 1/2	10	5	10	EDP11S010GN3R	Yes	A [5]	ED1	26.5 x 20 x 11.5	42	$8,587	V1
	10	13.5	7 1/2	11	EDP11S013GN3R	Yes	A [5]	ED1	26.5 x 20 x 11.5	42	$8,686	V1
	10	17	10	13.5	EDP11S017GN3R	Yes	B [5]	ED1	26.5 x 20 x 11.5	56	$9,100	V1
	15	24	10	19	EDP11S024GN3R	Yes	B [5]	ED1	26.5 x 20 x 11.5	56	$9,652	V1
	20	31	15	25	EDP11S031GN3R	Yes	B [5]	ED1	26.5 x 20 x 11.5	56	$10,411	V1
	25	38	20	33	EDP11S038GN3R	Yes	C [5]	ED2	32.5 x 24 x 14	90	$11,125	V1
	30	45	25	38	EDP11S045GN3R	Yes	C [5]	ED2	32.5 x 24 x 14	104	$12,369	V1
	40	58.5	30	47	EDP11S058GN3R	Yes	C [5]	ED2	32.5 x 24 x 14	110	$13,673	V1
	50/60	70.5	40	61	EDP11S070GN3R	Yes	D [5]	ED3	38.5 x 30 x 14	240	$14,451	V1
	75	88	50	73	EDP11S088GN3R	Yes	D [5]	ED3	38.5 x 30 x 14	245	$16,653	V1
	75	105	75	88	EDP11S105GN3R	No	E [6]	ED4	50.5 x 30 x 17.5	300	$19,733	V1
	100/125	142	75	115	EDP11S142GN3R	No	E [6]	ED4	50.5 x 30 x 17.5	300	$22,415	V1
	150	180	100	142	EDP11S180GN3R	No	E [6]	ED4	50.5 x 30 x 17.5	300	$27,847	V1
	175	211	125	180	EDP11S211GN3R	No	E [6]	ED4	50.5 x 30 x 17.5	300	$31,122	V1
	200	242	150	211	EDP11S242GN3R	No	F [6]	ED6	83 x 32 x 41	700	$45,693	V1
	250	312	200	242	EDP11S312GN3R	No	F [6]	ED6	83 x 32 x 41	720	$50,053	V1
	300	370	250	312	EDP11S370GN3R	No	F [6]	ED6	83 x 32 x 41	750	$52,682	V1
	400	477	300	370	EDP11S477GN3R	No	F [6]	ED6	83 x 32 x 41	775	$59,523	V1
	450	515	400	477	EDP11S515GN3R	No	G [6]	ED8	83 x 56 x 37	1100	$71,976	V1
	500	601	450	515	EDP11S601GN3R	No	G [6]	ED8	83 x 56 x 37	1120	$77,828	V1
	600	720	500	560	EDP11S720GN3R	No	G [7]	ED8	83 x 56 x 37	1150	$94,509	V1

Notes:
1) CT = Constant Torque, 150% overload / 60 sec.; VT = Variable Torque (Quadratic Load), 110% overload / 60 sec.
2) "HP" rating based on "average FLA values". Use as a guide only.
3) Motor FLA may vary with speed and manufacturer. ALWAYS compare motor FLA to Nominal AMPS of drive.
4) ED1 - ED4 enclosures are non-ventilated and wall-mounted; ED6 - ED9 enclosures are ventilated and floor mounted.
5) Maximum 45°C ambient temperature without derating
6) Maximum 40°C ambient temperature without derating
7) Maximum 38°C ambient temperature without derating
8) Dimensions and weights are for estimating purposes only. Only use "AS BUILT" drawings for construction. For other technical data please refer to WEG product manual.

EDP11 - ENGINEERED DRIVE PANEL

Enclosed VFD Panel - NEMA 3R Enclosure with By-Pass

Motor Voltage	ND / VT1 Motor HP [2]	ND / VT1 Drive Amps [3]	HD / CT1 Motor HP [2]	HD / CT1 Drive Amps [3]	Catalog Number	Braking Transistor	Drive Frame Size	Enclosure Frame Size [4]	Dimensions (in.) HxWxD [7]	Approx. Weight (lbs.) [7]	List Price	Multiplier
230 Vac	**Input Power Supply: Three-Phase 220-240 Vac with Dynamic Braking Transistor**											
	2	7.0	1 1/2	5.5	EDP11S007DN3R10000	Yes	A [5]	ED2	26.5 x 20 x 11.5	36	**$10,031**	V1
	3	10	2	8.0	EDP11S010DN3R10000	Yes	A [5]	ED2	26.5 x 20 x 11.5	36	**$10,107**	V1
	5	13	3	11	EDP11S013DN3R10000	Yes	A [5]	ED2	26.5 x 20 x 11.5	41	**$10,206**	V1
	5	16	5	13	EDP11S016DN3R10000	Yes	A [5]	ED2	26.5 x 20 x 11.5	42	**$10,438**	V1
	7 1/2	24	7 1/2	20	EDP11S024DN3R10000	Yes	B [5]	ED2	26.5 x 20 x 11.5	56	**$11,057**	V1
	10	28	10	24	EDP11S028DN3R10000	Yes	B [5]	ED2	26.5 x 20 x 11.5	56	**$11,994**	V1
	10	33.5	10	28	EDP11S033DN3R10000	Yes	B [5]	ED2	26.5 x 20 x 11.5	56	**$12,805**	V1
	15	45	15	36	EDP11S045DN3R10000	Yes	C [5]	ED3	32.5 x 24 x 14	88	**$14,224**	V1
	20	54	20	45	EDP11S054DN3R10000	Yes	C [5]	ED3	32.5 x 24 x 14	90	**$15,647**	V1
	25	70	20	56	EDP11S070DN3R10000	Yes	C [5]	ED3	32.5 x 24 x 14	100	**$16,857**	V1
	30	86	25	70	EDP11S086DN3R10000	Yes	D [5]	ED4	38.5 x 30 x 14	230	**$19,015**	V1
	40	105	30	86	EDP11S105DN3R10000	Yes	D [5]	ED4	38.5 x 30 x 14	240	**$22,226**	V1
	50	142	40	115	EDP11S142DN3R10000	No	E [6]	ED5	50.5 x 30 x 17.5	300	**$26,952**	V1
	60	180	50	142	EDP11S180DN3R10000	No	E [6]	ED5	50.5 x 30 x 17.5	300	**$33,285**	V1
	75	211	60	180	EDP11S211DN3R10000	No	E [6]	ED5	50.5 x 30 x 17.5	300	**$37,824**	V1
460 Vac	**Input Power Supply: Three-Phase 460-480 Vac with Dynamic Braking Transistor**											
	2	3.6	2	3.6	EDP11S003GN3R10000	Yes	A [5]	ED2	26.5 x 20 x 11.5	36	**$9,851**	V1
	3	5.0	3	5.0	EDP11S005GN3R10000	Yes	A [5]	ED2	26.5 x 20 x 11.5	36	**$9,967**	V1
	5	7.0	3	5.5	EDP11S007GN3R10000	Yes	A [5]	ED2	26.5 x 20 x 11.5	41	**$10,031**	V1
	7 1/2	10	5	10	EDP11S010GN3R10000	Yes	A [5]	ED2	26.5 x 20 x 11.5	42	**$10,107**	V1
	10	13.5	7 1/2	11	EDP11S013GN3R10000	Yes	A [5]	ED2	26.5 x 20 x 11.5	42	**$10,206**	V1
	10	17	10	13.5	EDP11S017GN3R10000	Yes	B [5]	ED2	26.5 x 20 x 11.5	56	**$10,698**	V1
	15	24	10	19	EDP11S024GN3R10000	Yes	B [5]	ED2	26.5 x 20 x 11.5	56	**$11,444**	V1
	20	31	15	25	EDP11S031GN3R10000	Yes	B [5]	ED2	26.5 x 20 x 11.5	56	**$12,314**	V1
	25	38	20	33	EDP11S038GN3R10000	Yes	C [5]	ED3	32.5 x 24 x 14	90	**$13,227**	V1
	30	45	25	38	EDP11S045GN3R10000	Yes	C [5]	ED3	32.5 x 24 x 14	104	**$14,616**	V1
	40	58.5	30	47	EDP11S058GN3R10000	Yes	C [5]	ED3	32.5 x 24 x 14	110	**$16,368**	V1
	50/60	70.5	40	61	EDP11S070GN3R10000	Yes	D [5]	ED4	38.5 x 30 x 14	240	**$17,146**	V1
	75	88	50	73	EDP11S088GN3R10000	Yes	D [5]	ED4	38.5 x 30 x 14	245	**$19,541**	V1
	75	105	75	88	EDP11S105GN3R10000	No	E [6]	ED5	50.5 x 30 x 17.5	300	**$23,077**	V1
	100/125	142	75	115	EDP11S142GN3R10000	No	E [6]	ED5	50.5 x 30 x 17.5	300	**$27,400**	V1
	150	180	100	142	EDP11S180GN3R10000	No	E [6]	ED5	50.5 x 30 x 17.5	300	**$33,842**	V1
	175	211	125	180	EDP11S211GN3R10000	No	E [6]	ED5	50.5 x 30 x 17.5	300	**$38,447**	V1
	200	242	150	211	EDP11S242GN3R10000	No	F [6]	ED7	83 x 32 x 41	700	**$58,272**	V1
	250	312	200	242	EDP11S312GN3R10000	No	F [6]	ED7	83 x 32 x 41	720	**$64,196**	V1
	300	370	250	312	EDP11S370GN3R10000	No	F [6]	ED7	83 x 32 x 41	750	**$67,085**	V1
	400	477	300	370	EDP11S477GN3R10000	No	F [6]	ED7	83 x 32 x 41	775	**$81,556**	V1
	450	515	400	477	EDP11S515GN3R10000	No	G [6]	ED9	83 x 56 x 37	1100	**$94,009**	V1
	500	601	450	515	EDP11S601GN3R10000	No	G [6]	ED9	83 x 56 x 37	1120	**$105,400**	V1
	600	720	500	560	EDP11S720GN3R10000	No	G [7]	ED9	83 x 56 x 37	1150	**$125,897**	V1

Notes:
1) CT = Constant Torque, 150% overload / 60 sec.; VT = Variable Torque (Quadratic Load), 110% overload / 60 sec.
2) "HP" rating based on "average FLA values". Use as a guide only.
3) Motor FLA may vary with speed and manufacturer. ALWAYS compare motor FLA to Nominal AMPS of drive.
4) ED1 - ED4 enclosures are non-ventilated and wall-mounted; ED6 - ED9 enclosures are ventilated and floor mounted.
5) Maximum 45°C ambient temperature without derating
6) Maximum 40°C ambient temperature without derating
7) Maximum 38°C ambient temperature without derating
8) Dimensions and weights are for estimating purposes only. Only use "AS BUILT" drawings for construction. For other technical data please refer to WEG product manual.

Data subject to change without notice.

Enclosed VFD Panel - NEMA 3R Enclosure (no By-Pass) with HOA / Pot / TB

Motor Voltage	ND / VT1		HD / CT1		Catalog Number	Braking Transistor	Drive Frame Size	Enclosure Frame Size [4]	Dimensions (in.) HxWxD [7]	Approx. Weight (lbs.) [7]	List Price	Multiplier
	Motor HP [2]	Drive Amps [3]	Motor HP [2]	Drive Amps [3]								
230 Vac	**Input Power Supply: Three-Phase 220-240 Vac with Dynamic Braking Transistor**											
	2	7.0	1 1/2	5.5	EDP11S007DN3R01000	Yes	A [5]	ED1	26.5 x 20 x 11.5	36	$9,284	V1
	3	10	2	8.0	EDP11S010DN3R01000	Yes	A [5]	ED1	26.5 x 20 x 11.5	36	$9,350	V1
	5	13	3	11	EDP11S013DN3R01000	Yes	A [5]	ED1	26.5 x 20 x 11.5	41	$9,449	V1
	5	16	5	13	EDP11S016DN3R01000	Yes	A [5]	ED1	26.5 x 20 x 11.5	42	$9,681	V1
	7 1/2	24	7 1/2	20	EDP11S024DN3R01000	Yes	B [5]	ED1	26.5 x 20 x 11.5	56	$10,222	V1
	10	28	10	24	EDP11S028DN3R01000	Yes	B [5]	ED1	26.5 x 20 x 11.5	56	$10,965	V1
	10	33.5	10	28	EDP11S033DN3R01000	Yes	B [5]	ED1	26.5 x 20 x 11.5	56	$11,665	V1
	15	45	15	36	EDP11S045DN3R01000	Yes	C [5]	ED2	32.5 x 24 x 14	88	$12,885	V1
	20	54	20	45	EDP11S054DN3R01000	Yes	C [5]	ED2	32.5 x 24 x 14	90	$14,163	V1
	25	70	20	56	EDP11S070DN3R01000	Yes	C [5]	ED2	32.5 x 24 x 14	100	$14,925	V1
	30	86	25	70	EDP11S086DN3R01000	Yes	D [5]	ED3	38.5 x 30 x 14	230	$17,083	V1
	40	105	30	86	EDP11S105DN3R01000	Yes	D [5]	ED3	38.5 x 30 x 14	240	$20,101	V1
	50	142	40	115	EDP11S142DN3R01000	No	E [6]	ED4	50.5 x 30 x 17.5	300	$22,730	V1
	60	180	50	142	EDP11S180DN3R01000	No	E [6]	ED4	50.5 x 30 x 17.5	300	$28,053	V1
	75	211	60	180	EDP11S211DN3R01000	No	E [6]	ED4	50.5 x 30 x 17.5	300	$31,262	V1
460 Vac	**Input Power Supply: Three-Phase 460-480 Vac with Dynamic Braking Transistor**											
	2	3.6	2	3.6	EDP11S003GN3R01000	Yes	A [5]	ED1	26.5 x 20 x 11.5	36	$9,104	V1
	3	5.0	3	5.0	EDP11S005GN3R01000	Yes	A [5]	ED1	26.5 x 20 x 11.5	36	$9,220	V1
	5	7.0	3	5.5	EDP11S007GN3R01000	Yes	A [5]	ED1	26.5 x 20 x 11.5	41	$9,284	V1
	7 1/2	10	5	10	EDP11S010GN3R01000	Yes	A [5]	ED1	26.5 x 20 x 11.5	42	$9,350	V1
	10	13.5	7 1/2	11	EDP11S013GN3R01000	Yes	A [5]	ED1	26.5 x 20 x 11.5	42	$9,449	V1
	10	17	10	13.5	EDP11S017GN3R01000	Yes	B [5]	ED1	26.5 x 20 x 11.5	56	$9,863	V1
	15	24	10	19	EDP11S024GN3R01000	Yes	B [5]	ED1	26.5 x 20 x 11.5	56	$10,415	V1
	20	31	15	25	EDP11S031GN3R01000	Yes	B [5]	ED1	26.5 x 20 x 11.5	56	$11,174	V1
	25	38	20	33	EDP11S038GN3R01000	Yes	C [5]	ED2	32.5 x 24 x 14	90	$11,888	V1
	30	45	25	38	EDP11S045GN3R01000	Yes	C [5]	ED2	32.5 x 24 x 14	104	$13,132	V1
	40	58.5	30	47	EDP11S058GN3R01000	Yes	C [5]	ED2	32.5 x 24 x 14	110	$14,436	V1
	50/60	70.5	40	61	EDP11S070GN3R01000	Yes	D [5]	ED3	38.5 x 30 x 14	240	$15,214	V1
	75	88	50	73	EDP11S088GN3R01000	Yes	D [5]	ED3	38.5 x 30 x 14	245	$17,416	V1
	75	105	75	88	EDP11S105GN3R01000	No	E [6]	ED4	50.5 x 30 x 17.5	300	$20,496	V1
	100/125	142	75	115	EDP11S142GN3R01000	No	E [6]	ED4	50.5 x 30 x 17.5	300	$23,178	V1
	150	180	100	142	EDP11S180GN3R01000	No	E [6]	ED4	50.5 x 30 x 17.5	300	$28,610	V1
	175	211	125	180	EDP11S211GN3R01000	No	E [6]	ED4	50.5 x 30 x 17.5	300	$31,885	V1
	200	242	150	211	EDP11S242GN3R01000	No	F [6]	ED6	83 x 32 x 41	700	$46,456	V1
	250	312	200	242	EDP11S312GN3R01000	No	F [6]	ED6	83 x 32 x 41	720	$50,911	V1
	300	370	250	312	EDP11S370GN3R01000	No	F [6]	ED6	83 x 32 x 41	750	$53,540	V1
	400	477	300	370	EDP11S477GN3R01000	No	F [6]	ED6	83 x 32 x 41	775	$60,381	V1
	450	515	400	477	EDP11S515GN3R01000	No	G [6]	ED8	83 x 56 x 37	1100	$72,834	V1
	500	601	450	515	EDP11S601GN3R01000	No	G [6]	ED8	83 x 56 x 37	1120	$78,686	V1
	600	720	500	560	EDP11S720GN3R01000	No	G [7]	ED8	83 x 56 x 37	1150	$95,367	V1

Notes:
1) CT = Constant Torque, 150% overload / 60 sec.; VT = Variable Torque (Quadratic Load), 110% overload / 60 sec.
2) "HP" rating based on "average FLA values". Use as a guide only.
3) Motor FLA may vary with speed and manufacturer. ALWAYS compare motor FLA to Nominal AMPS of drive.
4) ED1 - ED4 enclosures are non-ventilated and wall-mounted; ED6 - ED9 enclosures are ventilated and floor mounted.
5) Maximum 45°C ambient temperature without derating
6) Maximum 40°C ambient temperature without derating
7) Maximum 38°C ambient temperature without derating
8) Dimensions and weights are for estimating purposes only. Only use "AS BUILT" drawings for construction. For other technical data please refer to WEG product manual.

EDP11 - ENGINEERED DRIVE PANEL

Enclosed VFD Panel - NEMA 3R Enclosure with By-Pass and HOA / Pot / TB

Motor Voltage	ND / VT[1]		HD / CT1		Catalog Number	Braking Transistor	Drive Frame Size	Enclosure Frame Size [4]	Dimensions (in.) HxWxD [7]	Approx. Weight (lbs.) [7]	List Price	Multiplier
	Motor HP [2]	Drive Amps [3]	Motor HP [2]	Drive Amps [3]								
230 Vac	Input Power Supply: Three-Phase 220-240 Vac with Dynamic Braking Transistor											
	2	7.0	1 1/2	5.5	EDP11S007DN3R11000	Yes	A [5]	ED2	26.5 x 20 x 11.5	36	$10,794	V1
	3	10	2	8.0	EDP11S010DN3R11000	Yes	A [5]	ED2	26.5 x 20 x 11.5	36	$10,870	V1
	5	13	3	11	EDP11S013DN3R11000	Yes	A [5]	ED2	26.5 x 20 x 11.5	41	$10,969	V1
	5	16	5	13	EDP11S016DN3R11000	Yes	A [5]	ED2	26.5 x 20 x 11.5	42	$11,201	V1
	7 1/2	24	7 1/2	20	EDP11S024DN3R11000	Yes	B [5]	ED2	26.5 x 20 x 11.5	56	$11,820	V1
	10	28	10	24	EDP11S028DN3R11000	Yes	B [5]	ED2	26.5 x 20 x 11.5	56	$12,757	V1
	10	33.5	10	28	EDP11S033DN3R11000	Yes	B [5]	ED2	26.5 x 20 x 11.5	56	$13,568	V1
	15	45	15	36	EDP11S045DN3R11000	Yes	C [5]	ED3	32.5 x 24 x 14	88	$14,987	V1
	20	54	20	45	EDP11S054DN3R11000	Yes	C [5]	ED3	32.5 x 24 x 14	90	$16,410	V1
	25	70	20	56	EDP11S070DN3R11000	Yes	C [5]	ED3	32.5 x 24 x 14	100	$17,620	V1
	30	86	25	70	EDP11S086DN3R11000	Yes	D [5]	ED4	38.5 x 30 x 14	230	$19,778	V1
	40	105	30	86	EDP11S105DN3R11000	Yes	D [5]	ED4	38.5 x 30 x 14	240	$22,989	V1
	50	142	40	115	EDP11S142DN3R11000	No	E [6]	ED5	50.5 x 30 x 17.5	300	$27,715	V1
	60	180	50	142	EDP11S180DN3R11000	No	E [6]	ED5	50.5 x 30 x 17.5	300	$34,048	V1
	75	211	60	180	EDP11S211DN3R11000	No	E [6]	ED5	50.5 x 30 x 17.5	300	$38,587	V1
460 Vac	Input Power Supply: Three-Phase 460-480 Vac with Dynamic Braking Transistor											
	2	3.6	2	3.6	EDP11S003GN3R11000	Yes	A [5]	ED2	26.5 x 20 x 11.5	36	$10,614	V1
	3	5.0	3	5.0	EDP11S005GN3R11000	Yes	A [5]	ED2	26.5 x 20 x 11.5	36	$10,730	V1
	5	7.0	3	5.5	EDP11S007GN3R11000	Yes	A [5]	ED2	26.5 x 20 x 11.5	41	$10,794	V1
	7 1/2	10	5	10	EDP11S010GN3R11000	Yes	A [5]	ED2	26.5 x 20 x 11.5	42	$10,870	V1
	10	13.5	7 1/2	11	EDP11S013GN3R11000	Yes	A [5]	ED2	26.5 x 20 x 11.5	42	$10,969	V1
	10	17	10	13.5	EDP11S017GN3R11000	Yes	B [5]	ED2	26.5 x 20 x 11.5	56	$11,461	V1
	15	24	10	19	EDP11S024GN3R11000	Yes	B [5]	ED2	26.5 x 20 x 11.5	56	$12,207	V1
	20	31	15	25	EDP11S031GN3R11000	Yes	B [5]	ED2	26.5 x 20 x 11.5	56	$13,077	V1
	25	38	20	33	EDP11S038GN3R11000	Yes	C [5]	ED3	32.5 x 24 x 14	90	$13,873	V1
	30	45	25	38	EDP11S045GN3R11000	Yes	C [5]	ED3	32.5 x 24 x 14	104	$15,233	V1
	40	58.5	30	47	EDP11S058GN3R11000	Yes	C [5]	ED3	32.5 x 24 x 14	110	$16,683	V1
	50/60	70.5	40	61	EDP11S070GN3R11000	Yes	D [5]	ED4	38.5 x 30 x 14	240	$17,909	V1
	75	88	50	73	EDP11S088GN3R11000	Yes	D [5]	ED4	38.5 x 30 x 14	245	$20,304	V1
	75	105	75	88	EDP11S105GN3R11000	No	E [6]	ED5	50.5 x 30 x 17.5	300	$23,840	V1
	100/125	142	75	115	EDP11S142GN3R11000	No	E [6]	ED5	50.5 x 30 x 17.5	300	$28,163	V1
	150	180	100	142	EDP11S180GN3R11000	No	E [6]	ED5	50.5 x 30 x 17.5	300	$34,605	V1
	175	211	125	180	EDP11S211GN3R11000	No	E [6]	ED5	50.5 x 30 x 17.5	300	$39,210	V1
	200	242	150	211	EDP11S242GN3R11000	No	F [6]	ED7	83 x 32 x 41	700	$59,035	V1
	250	312	200	242	EDP11S312GN3R11000	No	F [6]	ED7	83 x 32 x 41	720	$65,054	V1
	300	370	250	312	EDP11S370GN3R11000	No	F [6]	ED7	83 x 32 x 41	750	$67,943	V1
	400	477	300	370	EDP11S477GN3R11000	No	F [6]	ED7	83 x 32 x 41	775	$82,414	V1
	450	515	400	477	EDP11S515GN3R11000	No	G [6]	ED9	83 x 56 x 37	1100	$94,867	V1
	500	601	450	515	EDP11S601GN3R11000	No	G [6]	ED9	83 x 56 x 37	1120	$106,258	V1
	600	720	500	560	EDP11S720GN3R11000	No	G [7]	ED9	83 x 56 x 37	1150	$126,755	V1

Notes:
1) CT = Constant Torque, 150% overload / 60 sec.; VT = Variable Torque (Quadratic Load), 110% overload / 60 sec.
2) "HP" rating based on "average FLA values". Use as a guide only.
3) Motor FLA may vary with speed and manufacturer. ALWAYS compare motor FLA to Nominal AMPS of drive.
4) ED1 - ED4 enclosures are non-ventilated and wall-mounted; ED6 - ED9 enclosures are ventilated and floor mounted.
5) Maximum 45°C ambient temperature without derating
6) Maximum 40°C ambient temperature without derating
7) Maximum 38°C ambient temperature without derating
8) Dimensions and weights are for estimating purposes only. Only use "AS BUILT" drawings for construction.
For other technical data please refer to WEG product manual.

Enclosure Frame Size

ED 1, 2, 3, 4

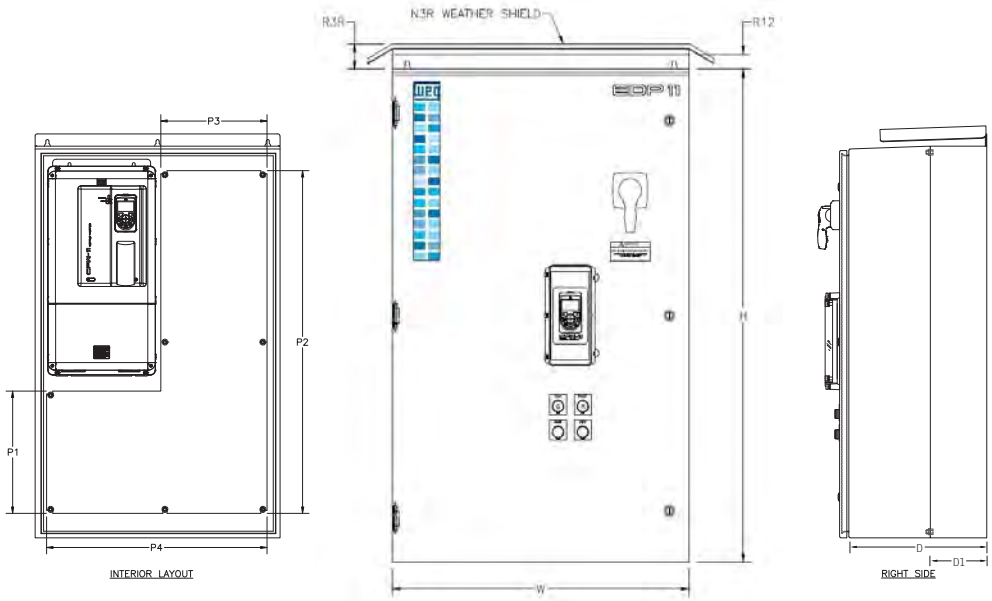

ED 5

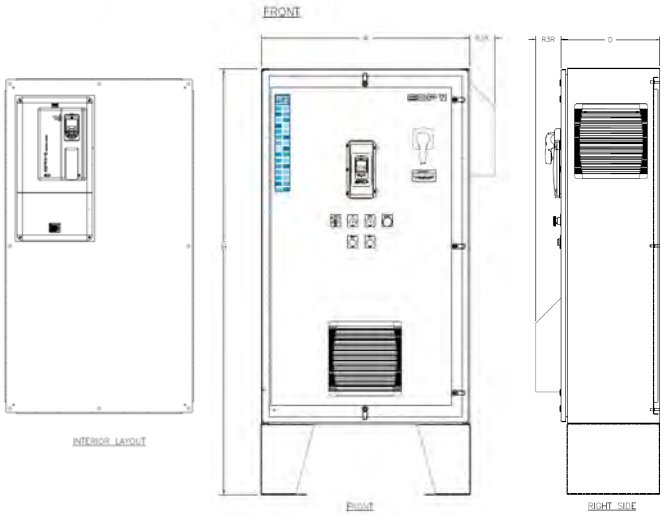

Dimensions [5]

Frame	H	W	D	D1	R3R [1]	R12 [2]
ED1 [4]	24	20	11.5	2.8	2.5	1.5
ED2 [4]	30	24	14	5.4	2.5	1.5
ED3 [4]	36	30	14	5.5	2.5	1.5
ED4 [4]	48	30	17.5	6.8	2.5	1.5
ED5 [3]	72	36	16	N/A	4	N/A

NOTE:
1) For NEMA 3R cabinet
2) For NEMA 12 Cabinet
3) ED5 "H" Dimension includes 12' for legs
4) ED1 - ED4 enclosures are non-ventilated and wall-mounted; ED5 enclosures are non-ventilated and floor mounted.
5) Dimensions are provided for estimating purposes only.
*For NEMA 3R cabinet **For NEMA 12 cabinet

EDP11 - ENGINEERED DRIVE PANEL

Enclosure Frame Size

ED 6

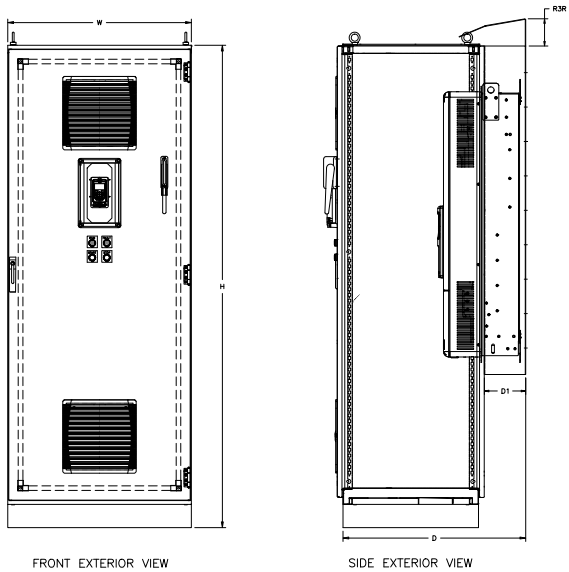

Dimensions

Frame	H	W	D(N12)	D(N3R)	D1(N12)	D1(N3R)	R3R	N12
ED6	83	32	31.4	41	6.2	11.4	2.5	1.5
ED7	83	63	31.4	41	6.2	11.4	2.5	1.5
ED8	83	56	31.9	41	7.5	11.4	2.5	1.5
ED9	83	95	31.9	41	7.5	11.4	2.5	1.5

NOTE: ED5 - ED9 enclosures are ventilated and floor-mounted

ED 7, 8, 9

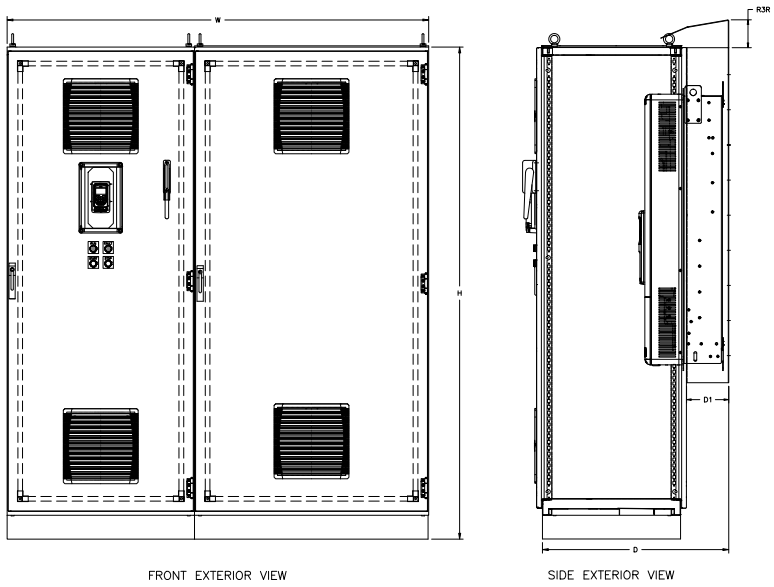

GPH2

The Combination Soft Starter is a NEMA 4/12 Enclosed industrial general purpose AC motor soft starter package. It is designed for simple and quick installation and start-up, requiring only input power and output motor connections.

The Combination Soft Starter is built to complement the ruggedness and reliability of WEG motors, providing a complete, simple, and cost effective AC motor starting and protection solution.

Standard Features

- Rated for 300% for 30 seconds
- Rated for 450% with derating
- 5 – 175HP at 230V
- 10 – 350HP at 460V
- Wall mounted enclosures for up to 125HP @ 230V; 250HP@460V
- Floor Mounted enclosure for up to 150 – 175HP @ 230V, and 300 – 350HP @ 460V
- Soft Starter
- SSW07 from 17 to 412Amps (all models with integrated AC1 by-pass)
- Circuit Breaker with Through Door Disconnect
- Control Power Transformer
- Start/Stop Pushbuttons
- Run/Fault Pilot Lights
- SuperDrive G2 Compatible

Note:
SSW07 models do not include keypad

Applications

- Centrifugal Pumps
- Screw Compressors
- Centrifugal Fans
- Wood Chipper
- Veneer Lathe
- Saw
- Conveyor

Optional Features

- AC3 by-pass contactor and DOL Selector Switch
- Door mounted keypad
- 575V

GPH2 Catalog Number Sequence

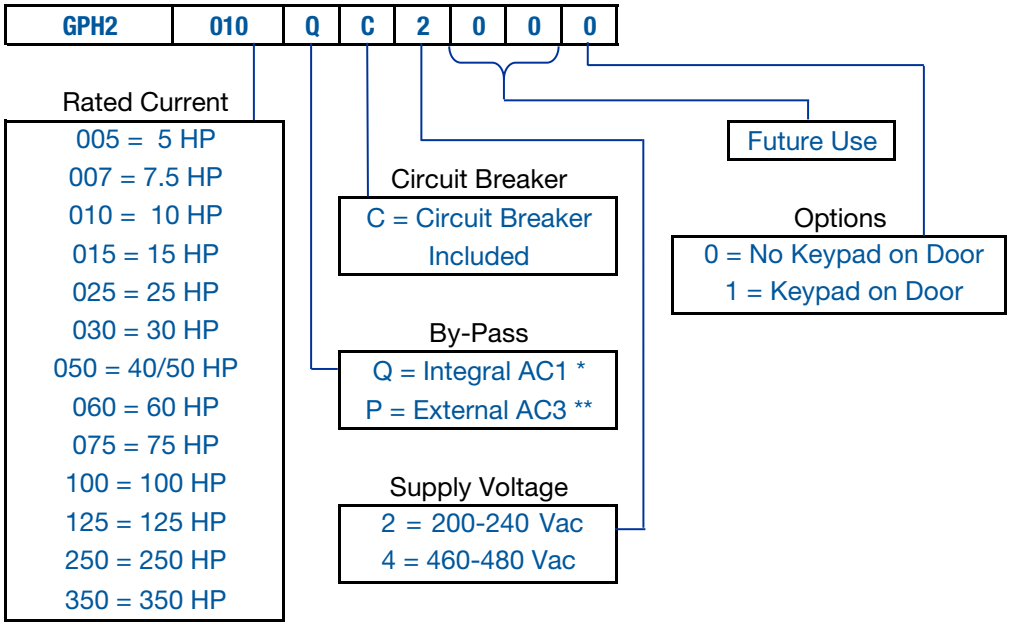

** Bypass Contactor is 'Run Rated' and is integral to the soft starter*

*** Bypass Contactor is 'Full Rated' and mounted adjacent the soft starter inside the panel.*

Table intended as reference only and not to create part numbers.

Data subject to change without notice.

NEMA 4 / 12 Enclosure (Standard Version - with Circuit Breaker, Integral AC1 By-Pass and no Keypad on Door)

Motor Voltage	Motor HP [1]	Starter Amps [2]	Catalog Number	Frame Size	Approx. Weight [4] (lbs.)	List Price	Multiplier
230 Vac	Input Power Supply: Three-Phase 200-240 Vac						
	5	17	GPH2005QC2000	1	140	$3,650	E1
	7.5	24	GPH2007QC2000	1	140	$3,750	E1
	10	30	GPH2010QC2000	1	140	$3,900	E1
	15	45	GPH2015QC2000	2	150	$4,300	E1
	25	61	GPH2025QC2000	2	150	$4,800	E1
	30	85	GPH2030QC2000	2	150	$5,800	E1
	50	130	GPH2050QC2000	3	280	$6,990	E1
	60	171	GPH2060QC2000	3	280	$7,500	E1
	75	200	GPH2075QC2000	3	280	$8,450	E1
	100	255	GPH2100QC2000	4	415	$10,700	E1
	125	312	GPH2125QC2000	4	415	$11,880	E1
	150	365	GPH2150QC2000	5	610	$12,700	E1
	175	412	GPH2175QC2000	5	610	$14,500	E1
460 Vac	Input Power Supply: Three-Phase 460-480 Vac						
	10	17	GPH2010QC4000	1	140	$3,650	E1
	15	24	GPH2015QC4000	1	140	$3,750	E1
	20	30	GPH2020QC4000	1	140	$3,900	E1
	30	45	GPH2030QC4000	2	150	$4,300	E1
	40 / 50	61	GPH2050QC4000	2	150	$4,800	E1
	75	85	GPH2075QC4000	2	150	$5,800	E1
	100	130	GPH2100QC4000	3	280	$6,990	E1
	125	171	GPH2125QC4000	3	280	$7,500	E1
	150	200	GPH2150QC4000	3	280	$8,450	E1
	200	255	GPH2200QC4000	4	415	$10,700	E1
	250	312	GPH2250QC4000	4	415	$11,880	E1
	300	365	GPH2300QC4000	5	610	$12,700	E1
	350	412	GPH2350QC4000	5	610	$14,500	E1

Notes:
1) "HP" rating based on FLA values from WEG W22, 2 and 4 pole, NEMA Premium® motors.
2) Motor FLA may vary with speed and manufacturer. ALWAYS compare motor FLA to Nominal AMPS of the starter.
3) For other technical data please refer to WEG product manual.
4) Dimensions and weights are for estimating purposes only. Only use "AS BUILT" drawings for construction.

GHP2 - COMBINATION SOFT STARTER

NEMA 4 / 12 Enclosure (with Circuit Breaker, Integral AC1 By-Pass and Keypad on Door)

Motor Voltage	Motor HP [1]	Starter Amps [2]	Catalog Number	Frame Size	Approx. Weight [4] (lbs.)	List Price	Multiplier
230 Vac	**Input Power Supply: Three-Phase 200-240 Vac**						
	5	17	GPH2005QC2001	1	140	$4,145	E1
	7.5	24	GPH2007QC2001	1	140	$4,245	E1
	10	30	GPH2010QC2001	1	140	$4,395	E1
	15	45	GPH2015QC2001	2	150	$4,795	E1
	25	61	GPH2025QC2001	2	150	$5,295	E1
	30	85	GPH2030QC2001	2	150	$6,295	E1
	50	130	GPH2050QC2001	3	280	$7,485	E1
	60	171	GPH2060QC2001	3	280	$7,995	E1
	75	200	GPH2075QC2001	3	280	$8,945	E1
	100	255	GPH2100QC2001	4	415	$11,195	E1
	125	312	GPH2125QC2001	4	415	$12,375	E1
	150	365	GPH2150QC2001	5	610	$13,195	E1
	175	412	GPH2175QC2001	5	610	$14,995	E1
460 Vac	**Input Power Supply: Three-Phase 460-480 Vac**						
	10	17	GPH2010QC4001	1	140	$4,145	E1
	15	24	GPH2015QC4001	1	140	$4,245	E1
	20	30	GPH2020QC4001	1	140	$4,395	E1
	30	45	GPH2030QC4001	2	150	$4,795	E1
	40 / 50	61	GPH2050QC4001	2	150	$5,295	E1
	75	85	GPH2075QC4001	2	150	$6,295	E1
	100	130	GPH2100QC4001	3	280	$7,485	E1
	125	171	GPH2125QC4001	3	280	$7,995	E1
	150	200	GPH2150QC4001	3	280	$8,945	E1
	200	255	GPH2200QC4001	4	415	$11,195	E1
	250	312	GPH2250QC4001	4	415	$12,375	E1
	300	365	GPH2300QC4001	5	610	$13,195	E1
	350	412	GPH2350QC4001	5	610	$14,995	E1

Notes:
1) "HP" rating based on FLA values from WEG W22, 2 and 4 pole, NEMA Premium® motors.
2) Motor FLA may vary with speed and manufacturer. ALWAYS compare motor FLA to Nominal AMPS of the starter.
3) For other technical data please refer to WEG product manual.
4) Dimensions and weights are for estimating purposes only. Only use "AS BUILT" drawings for construction.

Data subject to change without notice.

NEMA 4 / 12 Enclosure (with Circuit Breaker, External AC3 By-Pass and no Keypad on Door)

Motor Voltage	Motor HP 1	Starter Amps 2	Catalog Number	Frame Size	Approx. Weight [4] (lbs.)	List Price	Multiplier
230 Vac	Input Power Supply: Three-Phase 200-240 Vac						
	5	17	GPH2005PC2000	1	140	$3,900	E1
	7.5	24	GPH2007PC2000	1	140	$4,032	E1
	10	30	GPH2010PC2000	1	140	$4,243	E1
	15	45	GPH2015PC2000	2	150	$4,865	E1
	25	61	GPH2025PC2000	2	150	$5,412	E1
	30	85	GPH2030PC2000	2	150	$6,585	E1
	50	130	GPH2050PC2000	3	280	$8,260	E1
	60	171	GPH2060PC2000	3	280	$9,013	E1
	75	200	GPH2075PC2000	3	280	$10,350	E1
	100	255	GPH2100PC2000	4	415	$12,965	E1
	125	312	GPH2125PC2000	4	415	$14,847	E1
	150	365	GPH2150PC2000	5	610	$15,706	E1
	175	412	GPH2175PC2000	5	610	$21,075	E1
460 Vac	Input Power Supply: Three-Phase 460-480 Vac						
	10	17	GPH2010PC4000	1	140	$3,900	E1
	15	24	GPH2015PC4000	1	140	$4,032	E1
	20	30	GPH2020PC4000	1	140	$4,243	E1
	30	45	GPH2030PC4000	2	150	$4,865	E1
	40 / 50	61	GPH2050PC4000	2	150	$5,412	E1
	75	85	GPH2075PC4000	2	150	$6,585	E1
	100	130	GPH2100PC4000	3	280	$8,260	E1
	125	171	GPH2125PC4000	3	280	$9,013	E1
	150	200	GPH2150PC4000	3	280	$10,350	E1
	200	255	GPH2200PC4000	4	415	$12,965	E1
	250	312	GPH2250PC4000	4	415	$14,847	E1
	300	365	GPH2300PC4000	5	610	$15,706	E1
	350	412	GPH2350PC4000	5	610	$21,075	E1

Notes:
1) "HP" rating based on FLA values from WEG W22, 2 and 4 pole, NEMA Premium® motors.
2) Motor FLA may vary with speed and manufacturer. ALWAYS compare motor FLA to Nominal AMPS of the starter.
3) For other technical data please refer to WEG product manual.
4) Dimensions and weights are for estimating purposes only. Only use "AS BUILT" drawings for construction.

GHP2 - COMBINATION SOFT STARTER

NEMA 4 / 12 Enclosure (with Circuit Breaker, External AC3 By-Pass and Keypad on Door)

Motor Voltage	Motor HP [1]	Starter Amps [2]	Catalog Number	Frame Size	Approx. Weight [4] (lbs.)	List Price	Multiplier Symbol
230 Vac	Input Power Supply: Three-Phase 200-240 Vac						
	5	17	GPH2005PC2001	1	140	$4,395	E1
	7.5	24	GPH2007PC2001	1	140	$4,527	E1
	10	30	GPH2010PC2001	1	140	$4,738	E1
	15	45	GPH2015PC2001	2	150	$5,360	E1
	25	61	GPH2025PC2001	2	150	$5,907	E1
	30	85	GPH2030PC2001	2	150	$7,080	E1
	50	130	GPH2050PC2001	3	280	$8,755	E1
	60	171	GPH2060PC2001	3	280	$9,508	E1
	75	200	GPH2075PC2001	3	280	$10,845	E1
	100	255	GPH2100PC2001	4	415	$13,460	E1
	125	312	GPH2125PC2001	4	415	$15,342	E1
	150	365	GPH2150PC2001	5	610	$16,201	E1
	175	412	GPH2175PC2001	5	610	$21,570	E1
460 Vac	Input Power Supply: Three-Phase 460-480 Vac						
	10	17	GPH2010PC4001	1	140	$4,395	E1
	15	24	GPH2015PC4001	1	140	$4,527	E1
	20	30	GPH2020PC4001	1	140	$4,738	E1
	30	45	GPH2030PC4001	2	150	$5,360	E1
	40 / 50	61	GPH2050PC4001	2	150	$5,907	E1
	75	85	GPH2075PC4001	2	150	$7,080	E1
	100	130	GPH2100PC4001	3	280	$8,755	E1
	125	171	GPH2125PC4001	3	280	$9,508	E1
	150	200	GPH2150PC4001	3	280	$10,845	E1
	200	255	GPH2200PC4001	4	415	$13,460	E1
	250	312	GPH2250PC4001	4	415	$15,342	E1
	300	365	GPH2300PC4001	5	610	$16,201	E1
	350	412	GPH2350PC4001	5	610	$21,570	E1

Notes:
1) "HP" rating based on FLA values from WEG W22, 2 and 4 pole, NEMA Premium® motors.
2) Motor FLA may vary with speed and manufacturer. ALWAYS compare motor FLA to Nominal AMPS of the starter.
3) For other technical data please refer to WEG product manual.
4) Dimensions and weights are for estimating purposes only. Only use "AS BUILT" drawings for construction.

Data subject to change without notice.

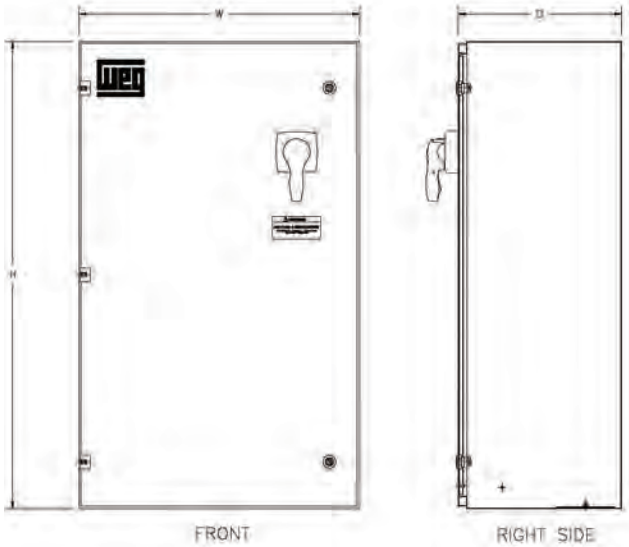

Frame Sizes 1-4

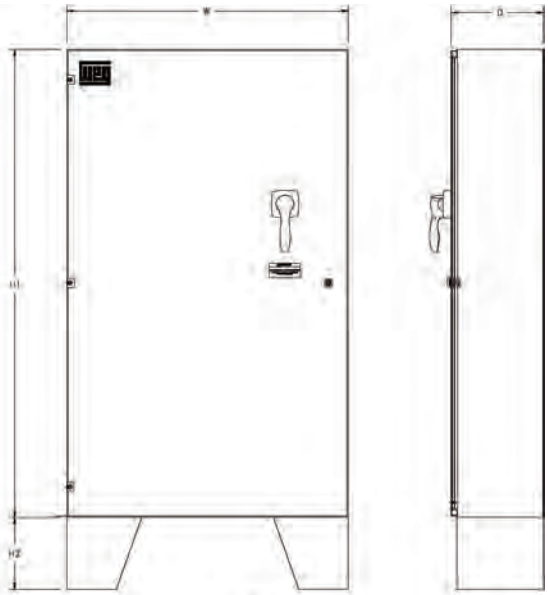

Frame Size 5

GPH Dimensions

Frame	W	D	H1	H2	Approx. Weight (lbs)
1	16	8	24	N/A	140
2	24	12	32	N/A	150
3	24	14	40	N/A	280
4	32	12	48	N/A	415
5	36	16	60	12	610

Notes: H1 + H2 = overall height

Enclosed Starters

Operation and Protection of Motors up to 600Hp at 460Vac (800A)

WEG enclosed starters series were designed to meet the requirements and flexibility frequently demanded in industrial applications. Featuring components that meet IEC design standards and UL horsepower ratings, WEG enclosed starters are UL508A approved and cULus certified. This means your panels will fulfill the rigorous requirements of UL508A and will have the quality and performance as for all WEG products

Standard or Custom

By having most of the processes in WEG facilities we can manufacture not only the enclosed starters listed on this catalog, but also any other custom panel your application may require. Our Engineers will work together with you to provide the perfect solution for your application.

Perfect Solution

WEG offers options for both: Full Voltage Non-Reversing Non-Combination Starters and Full Voltage Non-Reversing Combination Starters up to 250Hp at 460Vac.

WEG's UL508A panel shops can manufacture any configuration of Non-Combination or Combination Starters for any low voltage horsepower ratings. Some examples are listed below:

- Enclosed Contactors
- Full Voltage Reversing Starters
- Reduced Voltage Magnetic Starters
  (Part-Winding, Wye-Delta)
- Reduced Voltage Solid-State Starters
- Multi-Speed Starters
- Explosion Proof Starters

Whenever you need a reliable product to control & protect your application, WEG field specialists can help you find the best solution.

New Concepts

Smaller size components allow selection of smaller enclosures which translates to cost savings. A wide range of ratings and frames allow the components to be more closely matched to your application. Our overload relays provide phase loss sensitivity, ambient temperature compensated for -4F to +140F (eliminating the need for additional heaters), and automatic reset for remote applications.

A wide range of industrial applications are covered: Pumps, Industrial Washing Machines, Compressors, Blowers, Cutting Machines, Conveyors, Lumber Processing and many others.

Product Line Overview

NON-COMBINATION STARTERS

Type		ESW	PESW	ESWX-M	ESWX-M	ESWX
Maximum Horsepower Rating at 460Vac 60Hz	[Hp]	75	75	10	75	75
Maximum Rated Current Imax (Iu)	[A]	105	105	16	105	105
Rated Operational Voltage	[V]	600	600	600	600	600
Enclosure Type		Metallic Type 1	Non-Metallic Type 4X	Cast Aluminum NEMA 7/9 NEMA 4X	Cast Aluminum Type 7/9	Cast Aluminum Type 7/9
Protections provided						
Motor Disconnect				✓	✓	
Motor Branch Short Circuit				✓	✓	
Motor Controller		✓	✓	✓	✓	✓
Motor Overload		✓	✓	✓	✓	✓
Accessories						
Pushbuttons		N/A	N/A	N/A	N/A	
Pilot light		N/A	N/A	N/A	N/A	
Emergency Stop		N/A	N/A	N/A	N/A	
Selector Switch		N/A	N/A	N/A	N/A	
Control Transformer		N/A	N/A	N/A	N/A	(available as an option)
Timing Relays (RTW Series)		N/A	N/A	N/A	N/A	(available as an option)
Protector Relay (RPW Series)		N/A	N/A	N/A	N/A	(available as an option)
Level Relay (RNW Series)		N/A	N/A	N/A	N/A	(available as an option)

Combination Starters

Product Line Overview

COMBINATION STARTERS

Type		ESWC	ESWE	ESWF
Maximum Horsepower Rating at 460Vac 60Hz	[Hp]	250	20	75
Maximum Rated Current I_{max} (I_u)	[A]	300	32	105
Rated Operational Voltage	[V]	600	600	600
Enclosure Type		Metallic Type 1 Type 3R Type 4 / 12 Non-Metallic Type 4X	Non-Metallic Type 4X	Metallic Type 1 Type 3R Type 4 / 12 Non-Metallic Type 4X
Protections provided				
Motor Disconnect		✓	✓	✓
Motor Branch Short Circuit		✓	✓	✓
Motor Controller		✓	✓	✓
Motor Overload		✓	✓	✓

Accessories

Pushbuttons		
Pilot light		
Emergency Stop		
Selector Switch		
Control Transformer	(available as an option)	(available as an option)
Timing Relays (RTW Series)	(available as an option)	
Protector Relay (RPW Series)	(available as an option)	
Level Relay (RNW Series)	(available as an option)	

Data subject to change without notice.

ESW Part Number Breakdown

ESW	(*)	B	18	D15	A	R32

ESW Enclosed Starter Non Combination NEMA1

- Blank:3 Phase
- S:1 Phase

Contactor Style

- Blank:CWM
- B:CWB

Contactor Amps

- 9:9 Amps
- 12:12 Amps
- 18:18 Amps
- 25:25 Amps
- 32:32 Amps
- 38:38 Amps
- 40:40 Amps
- 50:50 Amps
- 65:65 Amps
- 80:80 Amps
- 95:95 Amps
- 105:105 Amps

Coil Voltage

- D15:120VAC
- V24:208-240VAC
- D39:480VAC

Control Devices

- A: Start Stop
- C:On Off Selector Switch+Reset
- E: Reset Only
- H: HOA+Reset
- M:HOA+Selector Switch On Off+Reset

Contactor Amps

3 Phase	Range	1 Phase
R23:	0.8-1.2	RM23:
R24:	1.2-1.8	RM24:
R25:	1.8-2.8	RM25:
R26:	2.8-4	RM26:
R27:	4-6.3	RM27:
R28:	5.6-8	RM28:
R29:	7-10	RM29:
R30:	8-12.5	RM30:
R32:	11-17	RM32:
R33:	15-23	RM33:
R34:	22-32	RM34:
R35:	32-40	RM35:
R38	32-50	RM38
R39:	40-57	
R42:	57-70	
R43:	63-80	
R44:	75-97	
R45:	90-112	

Table intended for reference and not to create part numbers.

Non-Combination Starters

ESW/PESW

UL File No. E202315

WEG offers non-reversing and non-combination magnetic starters up to 75HP at 460Vac (105A). Featuring components that meet IEC design standards and UL horsepower ratings, incorporating WEG contactors and overload relays, the magnetic starters are ideal to protect and operate motors, ensuring smooth operation year-after year.

Three series are available:
- Metallic Type 1 – ESW Series
- Non-Metallic Type 4X – PESW Series
- Metallic Type NEMA 7/9 - ESWX Series

WEG ESW and PESW starters are pre-wired from the factory and recommended for all single and three phase applications where magnetic starters can be applied.

Standard Features

- High horsepower ratings in four compact sizes
- Fast acceleration and high initial torque
- Bimetallic Overload Relays – class 10
- Adjustable trip current
- Ambient temperature compensated
- Phase-loss sensitivity protection
- Selectable Manual or Automatic RESET
- Electrically isolated NO-NC auxiliary contacts
- Easy to install and setup

Data subject to change without notice.

NEMA 1 Enclosure – Three Phase

ESW Series - Non-combination Across The Line Starter Three -Phase - Enclosure Type-1

Max. UL Horsepower				Box	Setting Range	Coil Voltage	RESET only		START/STOP + RESET		Multiplier
200V	230V	460V	575V				Catalog Number	List Price	Catalog Number	List Price	
-	-	1/2	1/2	M04	0.8 - 1.2	120	ESW-B9D15E-R23	$157	ESW-B9D15A-R23	$210	Z3
						208-240	ESW-B9V24E-R23		ESW-B9V24A-R23		
						480	ESW-B9D39E-R23		ESW-B9D39A-R23		
-	-	3/4	1	M04	1.2 - 1.8	120	ESW-B9D15E-R24	$157	ESW-B9D15A-R24	$210	
						208-240	ESW-B9V24E-R24		ESW-B9V24A-R24		
						480	ESW-B9D39E-R24		ESW-B9D39A-R24		
1/2	1/2	1	2	M04	1.8 - 2.8	120	ESW-B9D15E-R25	$157	ESW-B9D15A-R25	$210	
						208-240	ESW-B9V24E-R25		ESW-B9V24A-R25		
						480	ESW-B9D39E-R25		ESW-B9D39A-R25		
3/4	3/4	2	3	M04	2.8 - 4.0	120	ESW-B9D15E-R26	$157	ESW-B9D15A-R26	$210	
						208-240	ESW-B9V24E-R26		ESW-B9V24A-R26		
						480	ESW-B9D39-R26		ESW-B9D39A-R26		
1	1-1/2	3	5	M04	4.0 -6.3	120	ESW-B9D15E-R27	$157	ESW-B9D15A-R27	$210	
						208-240	ESW-B9V24E-R27		ESW-B9V24A-R27		
						480	ESW-B9D39E-R27		ESW-B9D39A-R27		
2	2	5	5	M04	5.6 - 8.0	120	ESW-B9D15E-R28	$157	ESW-B9D15A-R28	$210	
						208-240	ESW-B9V24E-R28		ESW-B9V24A-R28		
						480	ESW-B9D39E-R28		ESW-B9D39A-R28		
2	3	5	7-1/2	M04	7.0 - 10	120	ESW-B9D15E-R29	$157	ESW-B9D15A-R29	$210	
						208-240	ESW-B9V24E-R29		ESW-B9V24A-R29		
						480	ESW-B9D39E-R29		ESW-B9D39A-R29		
3	3	7-1/2	10	M04	8.0 - 12.5	120	ESW-B12D15E-R30	$174	ESW-B12D15A-R30	$227	
						208-240	ESW-B12V24E-R30		ESW-B12V24A-R30		
						480	ESW-B12D39E-R30		ESW-B12D39A-R30		
3	5	10	15	M04	11 - 17	120	ESW-B18D15E-R32	$188	ESW-B18D15A-R32	$241	
						208-240	ESW-B18V24E-R32		ESW-B18V24A-R32		
						480	ESW-B18D39E-R32		ESW-B18D39A-R32		
5	7-1/2	15	15	M04	15 -23	120	ESW-B25D15E-R33	$223	ESW-B25D15A-R33	$276	
						208-240	ESW-B25V24E-R33		ESW-B25V24A-R33		
						480	ESW-B25D39E-R33		ESW-B25D39A-R33		
10	10	20	25	M04	22 -32	120	ESW-B32D15E-R34	$245	ESW-B32D15A-R34	$298	
						208-240	ESW-B32V24E-R34		ESW-B32V24A-R34		
						480	ESW-B32D39E-R34		ESW-B32D39A-R34		
10	10	25	25	M04	32-40	120	ESW-B38D15E-R35	$292	ESW-B38D15A-R35	$345	
						208-240	ESW-B38V24E-R35		ESW-B38V24A-R35		
						480	ESW-B38D39E-R35		ESW-B38D39A-R35		
10	10	30	25	M06	32-40	120	ESW-40V18E-R35	$292	ESW-40V18A-R35	$345	
						208-240	ESW-40V24E-R35		ESW-40V24A-R35		
						480	ESW-40V47E-R35		ESW-40V47A-R35		
15	15	30	40	M06	32 - 50	120	ESW-50V18E-R38	$350	ESW-50V18A-R38	$403	
						208-240	ESW-50V24E-R38		ESW-50V24A-R38		
						480	ESW-50V47E-R38		ESW-50V47A-R38		
15	20	40	50	M06	40 - 57	120	ESW-65V18E-R39	$375	ESW-65V18A-R39	$428	
						208-240	ESW-65V24E-R39		ESW-65V24A-R39		
						480	ESW-65V47E-R39		ESW-65V47A-R39		
20	25	50	60	M06	57 - 70	120	ESW-80V18E-R41	$421	ESW-80V18A-R41	$474	
						208-240	ESW-80V24E-R41		ESW-80V24A-R41		
						480	ESW-80V47E-R41		ESW-80V47A-R41		
25	30	60	75	M08	63 - 80	120	ESW-95V18E-R43	$876	ESW-95V18A-R43	$929	
						208-240	ESW-95V24E-R43		ESW-95V24A-R43		
						480	ESW-95V47E-R43		ESW-95V47A-R43		
30	30	75	75	M08	75 - 97	120	ESW-105V18E-R44	$975	ESW-105V18A-R44	$1,028	
						208-240	ESW-105V24E-R44		ESW-105V24A-R44		
						480	ESW-105V47E-R44		ESW-105V47A-R44		
30	40	75	-	M08	90 - 112	120	ESW-105V18E-R45	$975	ESW-105V18A-R45	$1,028	
						208-240	ESW-105V24E-R45		ESW-105V24A-R45		
						480	ESW-105V47E-R45		ESW-105V47A-R45		

Notes:

1) Please contact your local WEG representative for starters with other control voltage.

2) 3-phase starters can be wired for single-phase applications (see page 241 for single phase conversion diagram)

Enclosed Starters - ESWS

NEMA 1 Enclosure – Single Phase

ESW Series - Non-combination Across The Line Starter - Non Reversing Single Phase - Enclosure Type-1

Max. UL Horsepower		Box	Setting Range	Coil Voltage	RESET only		Start Stop Reset		Multiplier All Models
115V	230V				Catalog Number	List Price	Catalog Number	List Price	
_	_	M04	0.8-1.2	120	ESWS-B9D15E-RM23	$135	ESWS-B9D15A-RM23	$188	Z3
				208-240	ESWS-B9V24E-RM23		ESWS-B9V24A-RM23		
_	1/10	M04	1.2-1.8	120	ESWS-B9D15E-RM24	$135	ESWS-B9D15A-RM24	$188	
				208-240	ESWS-B9V24E-RM24		ESWS-B9V24A-RM24		
_	1/6	M04	1.8-2.8	120	ESWS-B9D15E-RM25	$135	ESWS-B9D15A-RM25	$188	
				208-240	ESWS-B9V24E-RM25		ESWS-B9V24A-RM25		
1/8	1/3	M04	2.8 - 4.0	120	ESWS-B9D15E-RM26	$135	ESWS-B9D15A-RM26	$188	
				208-240	ESWS-B9V24E-RM26		ESWS-B9V24A-RM26		
1/4	1/2	M04	4.0 - 6.3	120	ESWS-B9D15E-RM27	$135	ESWS-B9D15A-RM27	$188	
				208-240	ESWS-B9V24E-RM27		ESWS-B9V24A-RM27		
1/3	1	M04	5.6 - 8.0	120	ESWS-B9D15E-RM28	$135	ESWS-B9D15A-RM28	$188	
				208-240	ESWS-B9V24E-RM28		ESWS-B9V24A-RM28		
1/2	1-1/2	M04	7.0 - 10	120	ESWS-B9D15E-RM29	$135	ESWS-B9D15A-RM29	$188	
				208-240	ESWS-B9V24E-RM29		ESWS-B9V24A-RM29		
1/2	2	M04	8.0 - 12.5	120	ESWS-B12D15E-RM30	$135	ESWS-B12D15A-RM30	$227	
				208-240	ESWS-B12V24E-RM30		ESWS-B12V24A-RM30		
3/4	2	M04	10-15	120	ESWS-B18D15E-RM31	$161	ESWS-B18D15A-RM31	$241	
				208-240	ESWS-B18V24E-RM31		ESWS-B18V24A-RM31		
1	3	M04	11 - 17	120	ESWS-B18D15E-RM32	$170	ESWS-B18D15A-RM32	$241	
				208-240	ESWS-B18V24E-RM32		ESWS-B18V24A-RM32		
1-1/2	3	M04	15 -23	120	ESWS-B25D15E-RM33	$180	ESWS-B25D15A-RM33	$276	
				208-240	ESWS-B25V24E-RM33		ESWS-B25V24A-RM33		
2	5	M04	22 -32	120	ESWS-B32D15E-RM34	$230	ESWS-B32D15A-RM34	$276	
				208-240	ESWS-B32V24E-RM34		ESWS-B32V24A-RM34		
3	7-1/2	M04	32-40	120	ESWS-B38D15E-RM35	$274	ESWS-B38D15A-RM35	$327	
				208-240	ESWS-B38V24E-RM35		ESWS-B38V24A-RM35		
3	7-1/2	M06	25 - 40	120	ESWS-40V18E-RM35	$274	ESWS-40V18E-RM35	$351	
				208-240	ESWS-40V24E-RM35		ESWS-40V24E-RM35		
3	10	M06	32 - 50	120	ESWS-50V18E-RM38	$330	ESWS-50V18E-RM38	$423	
				208-240	ESWS-50V24E-RM38		ESWS-50V24E-RM38		

Notes: 1) OLR must be set a5 115% of motor FLA
ESWS - Single-phase version - assembled with 2 pole contactor and 2 pole overload relays

Data subject to change without notice.

Field Mod Kits for ESW/ESWS Series

Accessories	Field Kit Modications				
Description	Structure		Catalog Number	List Price	Multiplier
	Top	Bottom			
No Pilot Device Metal Brackets - 2 x 22mm holes w/ plugs	PLUG	PLUG	KESWPP	$25	Z3
Start / Stop Pushbutton	PLUG	START - STOP	KESWPS	$80	
Hand-Off-Auto Selector Switch	HAND - OFF - AUTO	PLUG	KESWHP	$80	
Off-On Selector Switch	OFF - ON	PLUG	KESWFP	$80	
E-stop	PLUG	E-STOP	KESWPE	$80	

KESWPP

KESWPS

KESWHP

KESWFP

WIRING DIAGRAM

Single-phase Starter

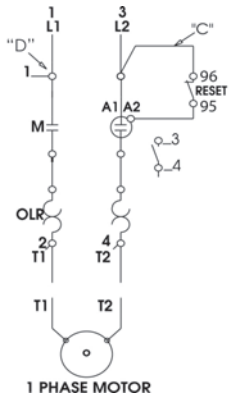

Three-phase Starter

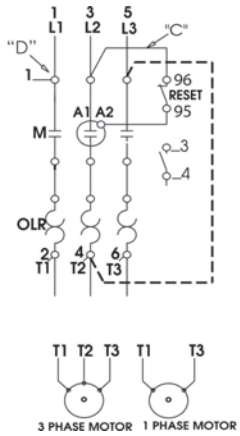

Conversion to single-phase, add jumper wire from L3 to T2 (follow dotted line connection above)

Separate Control

FOR SEPARATE CONTROL, REMOVE WIRES "C" AND "D" IF SUPPLIED AND CONNECT SEPARATE CONTROL LINES TO TERMINAL Nº 96 ON THE OVERLOAD RELAY AND TO TERMINAL Nº _3 ON THE AUX. CONTACT BLOCK (FOR 3 WIRE CONTROL) OR TO THE CONTACTOR COIL Nº A1 (FOR 2 WIRE CONTROL).

Pilot Devices

2 Wire Control

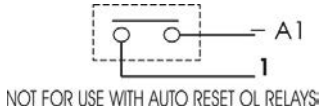

3 Wire Control

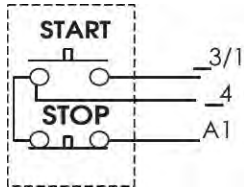

Hand-Off Auto Wire Control (For ESW Series Only)

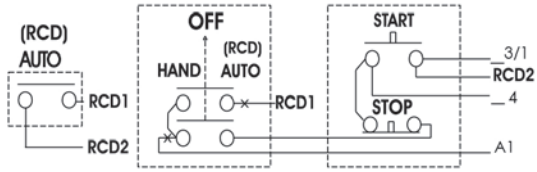

DIMENSIONS

Provision for cable gland fitting	Standard			
	Top	Bottom	Side	Back
Box M04	2x (½" or ¾")	2x (½" or ¾")	4x (½" or ¾")	2x (½" or ¾")
	1x (¾" or 1")	1x (¾" or 1")	-	-
Box M06	1x (½" or ¾")	1x (½" or ¾")	3x (½" or ¾")	-
	2x (1" or 1-1/4")	2x (1" or 1-1/4")	4x (1" or 1-1/4")	-
Box M08	1x (1")	1x (1")	1x (1")	1x (1")
	1x (1-1/2")	1x (1-1/2")	4x (¾")	-

Dimensions (approx. inches)				
Enclosed Starters	Enclosure Size			
	BOX	H	W	D
ESW(S) 9, 12, 18, 25, 32	M04	9.5	5.5	5.0
ESW(S) 40, 50, 65, 80	M06	13.0	7.5	5.6
ESW 95, 105	M08	17.8	9.5	6.7

Data subject to change without notice.

PESW Part Number Breakdown

PESW	(*)	B	18	D15	AX	R32

PESW Enclosed Starter Non Combination NEMA4X

- Blank:3 Phase
- S:1 Phase

Contactor Style

- Blank:CWM
- B:CWB

Contactor Amps

- 9:9 Amps
- 12:12 Amps
- 18:18 Amps
- 25:25 Amps
- 32:32 Amps
- 38:38 Amps
- 40:40 Amps
- 50:50 Amps
- 65:65 Amps
- 80:80 Amps
- 95:95 Amps
- 105:105 Amps

Coil Voltage

- D15:120VAC
- V24:208-240VAC
- D39:480VAC

Control Devices

- AX: Start Stop
- ACX:Start Stop+HOA
- AB1X:Start Stop + Indicator
- C:On Off Selector Switch+Reset
- ECX: HOA +Reset
- EX: Reset Only
- EFX:On Off Selector+Reset
- H: HOA+Reset
- ICX:HOA No Reset
- IFX:On Off Switch No Reset
- M:HOA+Selector Switch On Off+Reset

Contactor Amps

3 Phase	Range	1 Phase
R57	0.8-1.2	RM57
R58	1.2-1.8	RM58
R59	1.8-2.8	RM59
R60	2.8-4	RM60
R61	4-6.3	RM61
R62	5.6-8	RM62
R63	7-10	RM63
R64	8-12.5	RM64
R66	11-17	RM66
R67	15-23	RM67
R68	22-32	RM68
R69	25-40	RM69
R35*	25-40*	RM35*
R38	32-50	RM38
R39	40-57	RM39
R42	57-70	RM41
R43	63-80	RM43
R44	75-97	RM44
R45	90-112	RM45

Table Intended for reference and not to create part numbers.

PESW

PESW Series - Non-combination Across the line starter Three-Phase Enclosure Type - 4X

Max. UL Horsepower				Box	Setting Range	Coil Voltage	RESET only		START/STOP + RESET		Multiplier
200V	230V	460V	575V				Catalog Number	List Price	Catalog Number	List Price	
-	-	1/2	1/2	05	0.8 - 1.2	120	PESW-B9D15EX-R57	$157	PESW-B9D15AX-R57	$210	Z3
						208-240	PESW-B9V24EX-R57		PESW-B9V24AX-R57		
						480	PESW-B9D39EX-R57		PESW-B9D39AX-R57		
-	-	3/4	1	05	1.2 - 1.8	120	PESW-B9D15EX-R58	$157	PESW-B9D15AX-R58	$210	
						208-240	PESW-B9V24EX-R58		PESW-B9V24AX-R58		
						480	PESW-B9D39EX-R58		PESW-B9D39AX-R58		
1/2	1/2	1	2	05	1.8 - 2.8	120	PESW-B9D15EX-R59	$157	PESW-B9D15AX-R59	$210	
						208-240	PESW-B9V24EX-R59		PESW-B9V24AX-R59		
						480	PESW-B9D39EX-R59		PESW-B9D39AX-R59		
3/4	3/4	2	3	05	2.8 - 4.0	120	PESW-B9D15EX-R60	$157	PESW-B9D15AX-R60	$210	
						208-240	PESW-B9V24EX-R60		PESW-B9V24AX-R60		
						480	PESW-B9D39EX-R60		PESW-B9D39AX-R60		
1	1-1/2	3	5	05	4.0 - 6.3	120	PESW-B9D15EX-R61	$157	PESW-B9D15AX-R61	$210	
						208-240	PESW-B9V24EX-R61		PESW-B9V24AX-R61		
						480	PESW-B9D39EX-R61		PESW-B9D39AX-R61		
2	2	5	5	05	5.6 - 8.0	120	PESW-B9D15EX-R62	$157	PESW-B9D15AX-R62	$210	
						208-240	PESW-B9V24EX-R62		PESW-B9V24AX-R62		
						480	PESW-B9D39EX-R62		PESW-B9D39AX-R62		
2	3	5	7-1/2	05	7.0 - 10	120	PESW-B9D15EX-R63	$157	PESW-B9D15AX-R63	$210	
						208-240	PESW-B9V24EX-R63		PESW-B9V24AX-R63		
						480	PESW-B9D39EX-R63		PESW-B9D39AX-R63		
3	3	7-1/2	10	05	8.0 - 12.5	120	PESW-B12D15EX-R64	$174	PESW-B12D15AX-R64	$227	
						208-240	PESW-B12V24EX-R64		PESW-B12V24EX-R64		
						480	PESW-B12D39EX-R64		PESW-B12D39AX-R64		
3	5	10	15	05	11 - 17	120	PESW-B18D15EX-R66	$188	PESW-B18D15AX-R66	$241	
						208-240	PESW-B18V24EX-R66		PESW-B18V24AX-R66		
						480	PESW-B18D39EX-R66		PESW-B18D39AX-R66		
5	7-1/2	15	15	05	15 - 23	120	PESW-B25D15EX-R67	$223	PESW-B25D15AX-R67	$276	
						208-240	PESW-B25V24EX-R67		PESW-B25V24AX-R67		
						480	PESW-B25D39EX-R67		PESW-B25D39AX-R67		
10	10	20	25	06	22 - 32	120	PESW-B32D15EX-R68	$262	PESW-B32D15AX-R68	$298	
						208-240	PESW-B32V24EX-R68		PESW-B32V24AX-R68		
						480	PESW-B32D39EX-R68		PESW-B32D39AX-R68		
10	10	25	25	06	25-40	120	PESW-B38D15EX-R69	$321	PESW-B38D15AX-R69	$345	
						208-240	PESW-B38V24EX-R69		PESW-B38V24AX-R69		
						480	PESW-B38D39EXR69		PESW-B38D39AX-R69		

continued on next page

Data subject to change without notice.

PESW Series - Non-combination Across the line starter - continued

Three-Phase Enclosure Type - 4X

Max. UL Horsepower				Box	Setting Range	Coil Voltage	RESET only		START/STOP + RESET		Multiplier
200V	230V	460V	575V				Catalog Number	List Price	Catalog Number	List Price	
10	10	25	25	06	25 - 40	120	PESW-40V18EX-R35	$321	PESW-40V18AX-R35	$345	Z3
						208-240	PESW-40V24EX-R35		PESW-40V24AX-R35		
						480	PESW-40V47EX-R35		PESW-40V47AX-R35		
15	15	30	40	08	32 - 50	120	PESW-50V18EX-R38	$564	PESW-50V18AX-R38	$579	
						208-240	PESW-50V24EX-R38		PESW-50V24AX-R38		
						480	PESW-50V47EX-R38		PESW-50V47AX-R38		
15	20	40	50	08	40 - 57	120	PESW-65V18EX-R39	$589	PESW-65V18AX-R39	$604	
						208-240	PESW-65V24EX-R39		PESW-65V24AX-R39		
						480	PESW-65V47EX-R39		PESW-65V47AX-R39		
20	25	50	60	08	57 -70	120	PESW-80V18EX-R41	$635	PESW-80V18AX-R41	$650	
						208-240	PESW-80V24EX-R41		PESW-80V24AX-R41		
						480	PESW-80V47EX-R41		PESW-80V47AX-R41		
25	30	60	75	10	63 - 80	120	PESW-95V18EX-R43	$1,085	PESW-95V18AX-R43	$1,100	
						208-240	PESW-95V24EX-R43		PESW-95V24AX-R43		
						480	PESW-95V47EX-R43		PESW-95V47AX-R43		
30	30	75	75	10	75 - 97	120	PESW-105V18EX-R44	$1,184	PESW-105V18AX-R44	$1,199	
						208-240	PESW-105V24EX-R44		PESW-105V24AX-R44		
						480	PESW-105V47EX-R44		PESW-105V47AX-R44		
30	40	75	-	10	90 -112	120	PESW-105V18EX-R45	$1,184	PESW-105V18AX-R45	$1,199	
						208-240	PESW-105V24EX-R45		PESW-105V24AX-R45		
						480	PESW-105V47EX-R45		PESW-105V47AX-R45		

Notes:
1) OLR must be set @115% of FLA
2) 3-phase starters with 120V coil are wired for separate control
3) 3-phase starters can be wired for single-phase applications (see diagram)

PESW Series - Non-combination Across the line starter Single Phase- Enclosure Type-4X

Max. UL Horsepower		Box	Setting Range	Coil Voltage	RESET only		START/STOP + RESET		Multiplier
115V	230V				Catalog Number	List Price	Catalog Number	List Price	
1/8	1/3	04	2.8 - 4.0	120	PESWS-B9D15EX-RM60	$140	PESWS-B9D15AX-RM60	$155	Z3
				208-240	PESWS-B9V24EX-RM60		PESWS-B9V24AX-RM60		
1/4	1/2	04	4.0 - 6.3	120	PESWS-B9D15EX-RM61	$140	PESWS-B9D15AX-RM61	$155	
				208-240	PESWS-B9V24EX-RM61		PESWS-B9V24AX-RM61		
1/3	1	04	5.6 - 8.0	120	PESWS-B9D15EX-RM62	$140	PESWS-B9D15AX-RM62	$155	
				208-240	PESWS-B9V24EX-RM62		PESWS-B9V24AX-RM62		
1/2	1-1/2	04	7.0 - 10	120	PESWS-B9D15EX-RM63	$140	PESWS-B9D15AX-RM63	$155	
				208-240	PESWS-B9V24EX-RM63		PESWS-B9V24AX-RM63		
1/2	2	04	8.0 - 12.5	120	PESWS-B12D15EX-RM64	$140	PESWS-B12D15AX-RM64	$155	
				208-240	PESWS-B12V24EX-RM64		PESWS-B12V24AX-RM64		
3/4	2	04	10 - 15	120	PESWS-B18D15EX-RM65	$161	PESWS-B18D15AX-RM65	$170	
				208-240	PESWS-B18V24EX-RM65		PESWS-B18V24AX-RM65		
1	3	04	11 - 17	120	PESWS-B18D15EX-RM66	$170	PESWS-B18D15AX-RM66	$182	
				208-240	PESWS-B18V24EX-RM66		PESWS-B18V24AX-RM66		
1-1/2	3	04	15 - 23	120	PESWS-B25D15EX-RM67	$180	PESWS-B25D15AX-RM67	$195	
				208-240	PESWS-B25V24EX-RM67		PESWS-B25V24AX-RM67		
2	5	04	22 - 32	120	PESWS-B32D15EX-RM68	$180	PESWS-B32D15AX-RM68	$195	
				208-240	PESWS-B32V24EX-RM68		PESWS-B32V24AX-RM68		
3	7-1/2	04	32-40	120	PESWS-B38D15EX-RM69	$274	PESWS-B38D15AX-RM69	$300	
				208-240	PESWS-B38V24EX-RM69		PESWS-B38V24AX-RM69		
3	7-1/2	06	25 - 40	120	PESWS-40V18EX-RM35	$274	PESWS-40V18AX-RM35	$300	
				208-240	PESWS-40V24EX-RM35		PESWS-40V24AX-RM35		
3	10	08	32 - 50	120	PESWS-50V18EX-RM38	$430	PESWS-50V18AX-RM38	$440	
				208-240	PESWS-50V24EX-RM38		PESWS-50V24AX-RM38		

Note: OLR must be set at 115% of motor FLA

Accessories - Mounting in Control Stations

Contact Block[1]

Replacement Base Mount Contact Blocks for PESWS(B) 9-38

	Description	Contacts	Diagram	Standard packing	Catalog Number	Price	Multiplier
0.015 kg[3]	Single contact blocks to mounting in control stations or DIN rail 35 mm	1NO		1 piece	BC10B-CSW	$5.00	Z5

Data subject to change without notice.

WIRING DIAGRAM

Single-phase Starter

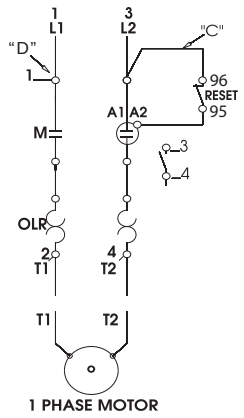

Three-phase Starter

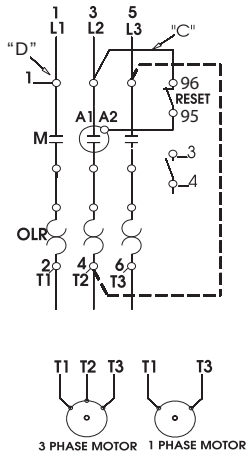

Conversion to single-phase, add jumper wire from L3 to T2 (follow dotted line connection above)

Separate Control

FOR SEPARATE CONTROL, REMOVE WIRES "C" AND "D" IF SUPPLIED AND CONNECT SEPARATE CONTROL LINES TO TERMINAL Nº 96 ON THE OVERLOAD RELAY AND TO TERMINAL Nº _3 ON THE AUX. CONTACT BLOCK (FOR 3 WIRE CONTROL) OR TO THE CONTACTOR COIL Nº A1 (FOR 2 WIRE CONTROL).

Pilot Devices

2 Wire Control

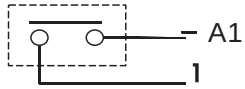

NOT FOR USE WITH AUTO RESET OL RELAYS.

3 Wire Control

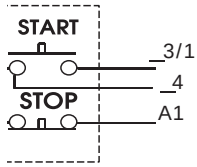

DIMENSIONS

SIZE 05 mm(in)	SIZE 06 mm (in)	SIZE 08 mm (in)	SIZE 10 mm (in)
øA = 5.5 (0.2165)	øA = 6.5 (0.3)	øA = 6.0 (0.2)	øA = 7.0 (0.3)
B = 219.0 (8.622)	B = 205 (8.1)	B = 275 (10.8)	B = 355 (14.0)
C = 112 (4.4331)	C = 126 (5.0)	C = 143 (5.6)	C = 167 (6.6)
D = 114.0 (4.4882)	D = 120 (4.7)	D = 180 (7.1)	D = 250 (9.9)
E = 229.5 (9.0354)	E = 210 (8.3)	E = 280 (11.0)	E = 360 (14.2)

Provision for cable gland fitting	Standard		
	Top	Bottom	Back
Size 05	2 x 1/2" - 3/4" PG13.5	2 x 1/2" - 3/4" PG13.5	4 X 1/2" PG13.5
Size 06		2 x 1/2" and 3/4"	ø22mm (0.9in)
Size 08	2 x 3/4" and 1"	2 x 3/4" and 1"	-
Size 10	2 x 3/4" and 1"	2 x 3/4" and 1"	-
	1 x 1" and 1 1/4"	1 x 1" and 1 1/4"	-

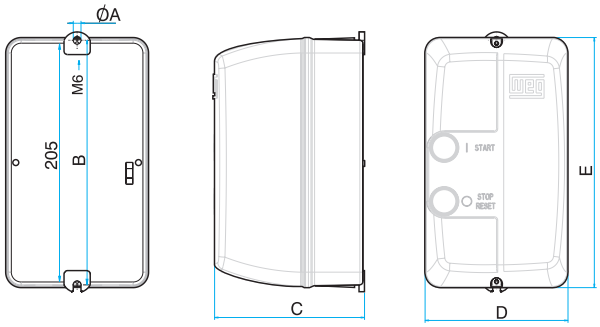

For wall mounting on starters size 08 and 10, four screws with the following characteristics should be used:

- Pan, dome or rounded shaped head;
- Starter size 08:
  - Screws size 1/4 (or M6 – ISO Standard);
  - Dimensions: diameter thread shall be maximum 1/4 in and diameter head shall be maximum 15/64 in.
- Starter size 10:
  - Screws size 12 (or M5 – ISO Standard);
  - Dimensions: diameter thread shall be maximum 0.236 in and diameter head shall be maximum 0.394 in.

Combination Starters Part Number Breakdown

Enclosed Starter Series Catalog Numbers

ESW	S	-	18	V18	A	2	-	R32

Enclosed Starter

ESW
PESW

Construction Type

Blank: Non-Combination 3-Phase
S: Non-Combination 1-Phase
C: Combination with Circuit Breaker
E: Self-Protected Type E (MPW Series)
F: Self-Protected Type F (MPW Series)
X: Explosion Proof

Non-Combo, Type C, Explosion Proc

Contactor Series

9: 9 Amps	105: 105 Amps
12: 12 Amps	112: 112 Amps
18: 18 Amps	150: 150 Amps
25: 25 Amps	180: 180 Amps
32: 32 Amps	250: 250 Amps
40: 40 Amps	300: 300 Amps
50: 50 Amps	400: 400 Amps
65: 65 Amps	630: 630 Amps
80: 80 Amps	800: 800 Amps
95: 95 Amps	

Type E & Type F Starters MPW Series

M18: 18A MPW
M40: 40A MPW
M65: 65A MPW
M100: 100A MPW

Control Voltage

Without CPT	Enclosed MMP Only
V04: 24V AC	Blank: No Control Voltage (Manual Switch)
V18: 120V AC	
V24: 208-240V AC	
V47: 480V AC	
V56: 600V AC	
With CPT (Prim / sec)	
T01: 208V / 120V	TA1: 208V / 120V + 50W
T02: 240V / 120V	TA2: 240V / 120V + 50W
T03: 277V / 120V	TA3: 277V / 120V + 50W
T04: 480V / 120V	TA4: 480V / 120V + 50W
T05: 600V / 120V	TA5: 600V / 120V + 50W
T06: 208V / 24V	TA6: 208V / 24V + 50W
T08: 240V / 24V	TA8: 240V / 24V + 50W
T09: 277V / 24V	TA9: 277V / 24V + 50W
T0A: 480V / 24V	TAA: 480V / 24V + 50W
T0B: 600V / 24V	TAB: 600V / 24V + 50W

Control Devices

A: Start + Stop + Reset
B: H-O-A Switch + On + Off + Reset
C: On-Off Selector Switch + Reset
D: Off + Reset
E: Reset
G: On-Off Selector Switch + On + Off
H: H-O-A Selector Switch
I: None
J: On + Off + Rotary Handle + Pilot Light
K: H-O-A Selector Switch + On + Off + Rotary Handle + Pilot Lights
L: On-Off Key Switch
M: H-O-A Selector Switch + On + Off + Reset
N: H-O-A Selector Switch + On + Off + Rotary Handle + Reset
P: On + Off + Rotary Handle + Reset
R: Rotary Handle

Enclosure Type

Blank: Type 1
3: Type 3R
4: Type 4
0: Type 4X Stainless
2: Type 12
79: Type 7&9
X: Type 4X Plastic

Overload Protection

3-Phase Starters		3-Phase Starters		1-Phase Starters		1-Phase Starters		Manual Motor Protector's	
R01[1]	0.28 -0.4	R32	11 -17	RM01[1]	0.28 - 0.4	RM33	15 - 23	D01	0.1 - 0.16
R02[1]	0.4 -0.63	R33	15 -23	RM021	0.4 - 0.63	RM34	22 - 32	D02	0.16 - 0.25
R03[1]	0.56 -0.8	R34	22 -32	RM031	0.56 - 0.8	RM35	25 - 40	D03	0.25 - 0.4
R04[1]	0.8 -1.2	R35	25 -40	RM041	0.8 - 1.2	RM36	25 - 40	D04	0.4 - 0.63
R05[1]	1.2 -1.8	R37	32 -50	RM051	1.2 - 1.8	RM38	32 - 50	D05	0.63 - 1
R06[1]	1.8 -2.8	R38	32 -50	RM061	1.8 - 12.8	RM39	40 - 57	D06	1 - 1.6
R07[1]	2.8 -4	R39	40 -57	RM071	2.8 - 4	RM40	50 - 63	D07	1.6 - 25
R08[1]	4 -6	R40	50 -63	RM081	4 - 6.3	RM41	57 - 70	D08	2.5 - 4
R09[1]	5.6 -8	R41	57 -70	RM091	5.6 - 8	RM42	63 - 80	D09	4 - 6.3
R10[1]	7 -10	R42	63 -80	RM101	7 - 10			D10	6.3 - 10
R11[1]	8 -12	R43	63 -80	RM111	8 - 12			D11	10 - 16
R12[1]	10 -15	R44	75 -97	RM121	10 - 15			D12	16 - 20
R13[1]	11 -17	R45	90 -112	RM131	11 - 17			D13	20 - 25
R14[1]	7 -10	R46	75 -97	RM141	7 - 10			D14	25 - 32
R15[1]	8 -12	R47	90 -112	RM151	8 - 12			D15	10 - 16
R16[1]	10 -15	R48	100 -150	RM161	10 - 15			D16	16 - 20
R17[1]	11 -17	R49	140 -215	RM171	11 - 17			D17	20 - 25
R18[1]	15 -23	R50	200 -310	RM181	15 - 23			D18	25 - 32
R19[1]	22 -32	R51	275 -420	RM191	22 - 32			D19	32 - 40
R20	0.28 -0.4	R54	400 -600	RM20	0.28 - 0.4			D20	40 - 50
R21	0.4 -0.63	R55	560 -840	RM21	0.4 - 0.63			D21	50 - 65
R22	0.56 -0.8			RM22	0.56 - 0.8			D22	55 - 75
R23	0.8 -1.2			RM23	0.8 - 1.2			D23	70 - 90
R24	1.2 -1.8			RM24	1.2 - 1.8			D24	80 - 100
R25	1.8 -2.8			RM25	1.8 - 2.8				
R26	2.8 -4			RM26	2.8 - 4				
R27	4 -6.3			RM27	4 - 6.3				
R28	5.6 -8			RM28	5.6 - 8				
R29	7 -10			RM29	7 - 10				
R30	8 -12			RM30	8 - 12				
R31	10 -15			RM31	10 - 15				

Table Intended for reference and not to create part numbers.

Data subject to change without notice.

WEG's full voltage non-reversing combination starters represent a competitive alternative to the traditional NEMA starters by offering:

- Reduced overall dimensions, yet providing reasonable internal wiring space
- Rotary through-the-door disconnect instead of the traditional flange operator
- UL/CSA approved performance in more compact components.

Two series are available off the shelf:

- MCCB disconnect – ESWC Series
- Motor protector – ESWE & ESWF Series

Combination Starter Basics

Combination starters are the most common type of packaged motor controllers. They are called combination because of their construction and combined functions required by the US National Electric Code (NEC): Motor Disconnect, Motor Branch Circuit Protection, Motor Controller and Motor Overload Protection. UL & CSA currently recognizes six different constructions of combination starters that meet the requirements of a motor branch circuit.

Constructions Types A through D are traditional starters that use either a listed disconnect switch and fuses or a listed circuit breaker as the disconnect means and for short circuit protection. Each type uses a separate UL508 listed motor controller and overload relay. Recently revisions on UL508 introduced the Type E and Type F starters.

UL Combination Starter Type	Device Used for Component Function			
	Disconnected	Branch Circuit Protection	Motor Controller	Motor OL Relay
A	UL 98 Manual Disconnect	UL 248 Fuses	UL 508 Magnetic or Solid State Controller	UL 508 Motor Overload Relay
B		UL 508 Motor Short Circuit Protector		
C	UL 489 Inverse Time Circuit Breaker			
D	UL 489 Instantaneous Trip Circuit Breaker			
E	UL 508 Self-Protected Combination Controller			
F	UL 508 Manual Self-Protected Combination Controller		UL 508 Magnetic or Solid State Controller	UL 508 Manual Self-Protected Combination Controller

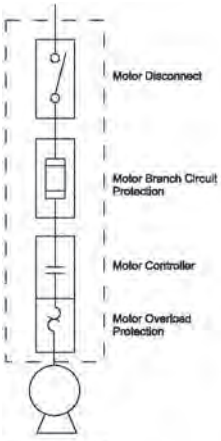

Types A through D combination starters

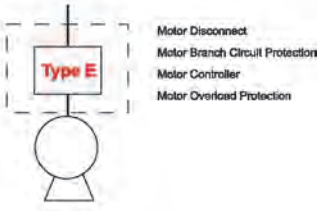

Type E and F combination starters

Type E starter is a self-protected combination motor controller that combines in a single device all the required functions of a combination starter eliminating any additional requirements for upstream fuses or circuit breaker. Type F starter consists of a listed manual Type E combined with a UL508 listed contactor.

ESWC

Combination Type-C Across The Line Starter

THREE-PHASE without Control Power Transformer

- Branch Disconnect: Rotary through-the-door Handle
- Short-Circuit Protection: Molded Case Circuit Breaker
- Motor Control: Magnetic Contactor
- Overload Protection: Thermal Overload Relay
- Control Devices: Hand-Off-Auto switch, Start- Stop and reset pushbutton
- Other enclosure options available on request

ESWC Series - Combination Type-C Across The Line Starter with no CPT

Max. 3-ph Hp Motors				Overload Setting Range (A)	Control Voltage (1) (Vac)	Metallic Enclosure Type 4/12			Multiplier
200V	230V	460V	575V			Catalog Number	List Price	Box Size	
1-1/2	1 1/2	3	5	4 - 6.3	120	ESWC-25V18N4-R27	$1,635	C-1	
					208-240	ESWC-25V24N4-R27			
					480	ESWC-25V47N4-R27			
2	2	5	5	5.6 - 8	120	ESWC-25V18N4-R28	$1,635	C-1	
					208-240	ESWC-25V24N4-R28			
					480	ESWC-25V47N4-R28			
3	3	7 1/2	7.5	8 - 12.5	120	ESWC-25V18N4-R30	$1,635	C-1	
					208-240	ESWC-25V24N4-R30			
					480	ESWC-25V47N4-R30			
5	5	10	10	11 - 17	120	ESWC-25V18N4-R32	$1,680	C-1	
					208-240	ESWC-25V24N4-R32			
					480	ESWC-25V47N4-R32			
71/2	7 1/2	15	15	15 - 23	120	ESWC-25V18N4-R33	$1,680	C-1	
					208-240	ESWC-25V24N4-R33			
					480	ESWC-25V47N4-R33			
10	10	20	25	22 - 32	120	ESWC-40V18N4-R34	$1,765	C-1	
					208-240	ESWC-40V24N4-R34			
					480	ESWC-40V47N4-R34			
10	15	25	25	25 - 40	120	ESWC-40V18N4-R35	$1,850	C-1	
					208-240	ESWC-40V24N4-R35			
					480	ESWC-40V47N4-R35			
10	15	30	-	32 - 50	120	ESWC-40V18N4-R37	$1,980	C-1	
					208-240	ESWC-40V24N4-R37			
					480	ESWC-40V47N4-R37			
20	20	40	50	40 - 57	120	ESWC-65V18N4-R39	$2,070	C-1	Z3
					208-240	ESWC-65V24N4-R39			
					480	ESWC-65V47N4-R39			
20	20	50	-	57 - 70	120	ESWC-65V18N4-R41	$2,160	C-1	
					208-240	ESWC-65V24N4-R41			
					480	ESWC-65V47N4-R41			
25	30	60	60	63 - 80	120	ESWC-105V18N4-R43	$2,765	C-1	
					208-240	ESWC-105V24N4-R43			
					480	ESWC-105V47N4-R43			
30	40	75	75	75 - 97	120	ESWC-105V18N4-R44	$2,800	C-1	
					208-240	ESWC-105V24N4-R44			
					480	ESWC-105V47N4-R44			
40	60	100	125	100 - 150	120	ESWC-150V18N4-R48	$5,210	C-2	
					208-240	ESWC-150V24N4-R48			
					480	ESWC-150V47N4-R48			
50	60	125	150	140 - 215	120	ESWC-150V18N4-R49	$5,290	C-2	
					208-240	ESWC-150V24N4-R49			
					480	ESWC-150V47N4-R49			
60	75	150	200	140 - 215	120	ESWC-180V18N4-R49	$5,530	C-2	
					208-240	ESWC-180V24N4-R49			
					480	ESWC-180V47N4-R49			
75	100	200	250	200 - 310	120	ESWC-300V18N4-R50	$8,670	C-3	
					208-240	ESWC-300V24N4-R50			
					480	ESWC-300V47N4-R50			
100	125	250	300	275 - 420	120	ESWC-300V18N4-R51	$9,250	C-3	
					208-240	ESWC-300V24N4-R51			
					480	ESWC-300V47N4-R51			

Notes:
(1) Please contact your local WEG representative for starters with 575V control voltage.
(2) 3-phase starters with 120V coil are pre-wired for separate control
(3) 3-phase starters can be wired for single-phase applications

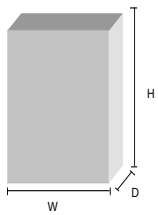

Dimensions (inches)			
Box Size	Enclosure Size		
	H	W	D
C-1	24	16	8
C-2	32	24	12
C-3	40	32	12

Data subject to change without notice.

ESWC Series - Combination Type-C Across The Line Starter

THREE-PHASE with Control Power Transformer

- Branch Disconnect: Rotary through-the-door Handle
- Short-Circuit Protection: Molded Case Circuit Breaker
- Motor Control: Magnetic Contactor
- Overload Protection: Thermal Overload Relay
- Control Devices: Hand-Off-Auto switch, Start-Stop and reset pushbutton
- Other enclosure options available on request

ESWC Series - Combination Type-C Across The Line Starter with CPT

Max. 3-ph Hp Motors				Overload Setting Range (A)	Control Voltage (prim. / sec.) (Vac)	Metallic Enclosure Type 4/12			Multiplier
200V	230V	460V	575V			Catalog Number	List Price	Box Size	
1-1/2	1 1/2	3	5	4 - 6.3	240 / 120	ESWC-25T02N4-R27	$1,835	C-1	
					480 / 120	ESWC-25T04N4-R27			
					575 / 120	ESWC-25T05N4-R27			
2	2	5	5	5.6 - 8	240 / 120	ESWC-25T02N4-R28	$1,835	C-1	
					480 / 120	ESWC-25T04N4-R28			
					575 / 120	ESWC-25T05N4-R28			
3	3	7 1/2	7.5	8 - 12.5	240 / 120	ESWC-25T02N4-R30	$1,835	C-1	
					480 / 120	ESWC-25T04N4-R30			
					575 / 120	ESWC-25T05N4-R30			
5	5	10	10	11 - 17	240 / 120	ESWC-25T02N4-R32	$1,880	C-1	
					480 / 120	ESWC-25T04N4-R32			
					575 / 120	ESWC-25T05N4-R32			
71/2	7 1/2	15	15	15 - 23	240 / 120	ESWC-25T02N4-R33	$1,880	C-1	
					480 / 120	ESWC-25T04N4-R33			
					575 / 120	ESWC-25T05N4-R33			
10	10	20	25	22 - 32	240 / 120	ESWC-40T02N4-R34	$1,965	C-1	
					480 / 120	ESWC-40T04N4-R34			
					575 / 120	ESWC-40T05N4-R34			
10	15	25	25	25 - 40	240 / 120	ESWC-40T02N4-R35	$2,050	C-1	
					480 / 120	ESWC-40T04N4-R35			
					575 / 120	ESWC-40T05N4-R35			
10	15	30	-	32 - 50	240 / 120	ESWC-40T02N4-R37	$2,180	C-1	
					480 / 120	ESWC-40T04N4-R37			
					575 / 120	ESWC-40T05N4-R37			
20	20	40	50	40 -57	240 / 120	ESWC-65T02N4-R39	$2,320	C-1	Z3
					480 / 120	ESWC-65T04N4-R39			
					575 / 120	ESWC-65T05N4-R39			
20	20	50	-	57 - 70	240 / 120	ESWC-65T02N4-R41	$2,410	C-1	
					480 / 120	ESWC-65T04N4-R41			
					575 / 120	ESWC-65T05N4-R41			
25	30	60	60	63 - 80	240 / 120	ESWC-105T02N4-R43	$3,015	C-1	
					480 / 120	ESWC-105T04N4-R43			
					575 / 120	ESWC-105T05N4-R43			
30	–	75	75	75 - 97	240 / 120	ESWC-105T02N4-R44	$3,050	C-1	
					480 / 120	ESWC-105T04N4-R44			
					575 / 120	ESWC-105T05N4-R44			
40	60	100	125	100 -150	240 / 120	ESWC-150T02N4-R48	$5,610	C-2	
					480 / 120	ESWC-150T04N4-R48			
					575 / 120	ESWC-150T05N4-R48			
50	60	125	150	140 - 215	240 / 120	ESWC-150T02N4-R49	$5,690	C-2	
					480 / 120	ESWC-150T04N4-R49			
					575 / 120	ESWC-150T05N4-R49			
60	75	150	200	140 - 215	240 / 120	ESWC-180T02N4-R49	$5,930	C-2	
					480 / 120	ESWC-180T04N4-R49			
					575 / 120	ESWC-180T05N4-R49			
75	100	200	250	200 - 310	240 / 120	ESWC-300T02N4-R50	$9,070	C-3	
					480 / 120	ESWC-300T04N4-R50			
					575 / 120	ESWC-300T05N4-R50			
100	125	250	300	275 - 420	240 / 120	ESWC-300T02N4-R51	$9,650	C-3	
					480 / 120	ESWC-300T04N4-R51			
					575 / 120	ESWC-300T05N4-R51			

Notes:
(1) Please contact your local WE G representative for starters with other control voltage.
(2) 3-phase starters can be wired for single-phase applications

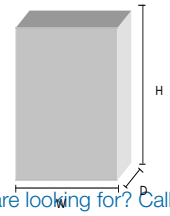

Dimensions (inches)			
Box Size	Enclosure Size		
	H	W	D
C-1	24	16	8
C-2	32	24	12
C-3	40	32	12

ESWE

Combination Type-E Across The Line Starter

- Branch Disconnect: Rotary through-the-door Handle
- Short-Circuit Protection: Manual Motor Protection
- Motor Control: Magnetic Contactor
- Overload Protection: Manual Motor Protection
- Control Devices: Hand-Off-Auto switch, Start-Stop pushbutton, pilot lights
- Other enclosue options available upon request

Three-Phase without CPT - Enclosure Type-4X

Combination Type-E Across The Line Starter

Max. 3-ph Hp Motors				Overload Setting Range (A)	Control Voltage (1) (Vac)	Non-Metallic Enclosure Type 4X			Multiplier
200V	230V	460V	575V			Catalog Number	List Price	Box Size	
-	-	1/2	1/2	0.63 - 1.0	120	ESWE-9V18KX-D05	$855	E-1	Z3
					480	ESWE-9V47KX-D05			
1/4	1/3	3/4	1	1.0 - 1.6	120	ESWE-9V18KX-D06	$855	E-1	
					208-240	ESWE-9V24KX-D06			
					480	ESWE-9V47KX-D06			
1/2	1/2	1-1/2	1-1/2	1.6 - 2.5	120	ESWE-9V18KX-D07	$855	E-1	
					208-240	ESWE-9V24KX-D07			
					480	ESWE-9V47KX-D07			
3/4	1	2	3	2.5 - 4.0	120	ESWE-9V18KX-D08	$855	E-1	
					208-240	ESWE-9V24KX-D08			
					480	ESWE-9V47KX-D08			
1-1/2	1-1/2	3	5	4.0 - 6.3	120	ESWE-9V18KX-D09	$855	E-1	
					208-240	ESWE-9V24KX-D09			
					480	ESWE-9V47KX-D09			
3	3	5	7-1/2	6.3 - 10	120	ESWE-9V18KX-D10	$865	E-1	
					208-240	ESWE-9V24KX-D10			
					480	ESWE-9V47KX-D10			
5	5	10	15	10 - 16	120	ESWE-18V18KX-D11	$875	E-1	
					208-240	ESWE-18V24KX-D11			
					480	ESWE-18V47KX-D11			
7-1/12	7-1/2	15	15	16 - 20	120	ESWE-25V18KX-D12	$900	E-1	
					208-240	ESWE-25V24KX-D12			
					480	ESWE-25V47KX-D12			
10	10	20	25	25 - 32	120	ESWE-40V18KX-D14	$990	E-1	
					208-240	ESWE-40V24KX-D14			
					480	ESWE-40V47KX-D14			

Three-Phase with CPT - Enclosure Type-4X

Max. 3-ph Hp Motors				Overload Setting Range (A)	Control Voltage (prim. / sec.) (Vac)	Non-Metallic Enclosure Type 4X			Multiplier
200V	230V	460V	575V			Catalog Number	List Price	Box Size	
-	-	1/2	1/2	0.63 - 1.0	480 / 120	ESWE-9T04KX-D05	$1,140	E-1	Z3
					575 / 120	ESWE-9T05KX-D05			
1/4	1/3	3/4	1	1.0 - 1.6	240 / 120	ESWE-9T02KX-D06	$1,140	E-1	
					480 / 120	ESWE-9T04KX-D06			
					575 / 120	ESWE-9T05KX-D06			
1/2	1/2	1-1/2	1-1/2	1.6 - 2.5	240 / 120	ESWE-9T02KX-D07	$1,140	E-1	
					480 / 120	ESWE-9T04KX-D07			
					575 / 120	ESWE-9T05KX-D07			
3/4	1	2	3	2.5 - 4.0	240 / 120	ESWE-9T02KX-D08	$1,140	E-1	
					480 / 120	ESWE-9T04KX-D08			
					575 / 120	ESWE-9T05KX-D08			
1-1/2	1-1/2	3	5	4.0 - 6.3	240 / 120	ESWE-9T02KX-D09	$1,140	E-1	
					480 / 120	ESWE-9T04KX-D09			
					575 / 120	ESWE-9T05KX-D09			
3	3	5	7-1/2	6.3 - 10	240 / 120	ESWE-9T02KX-D10	$1,140	E-1	
					480 / 120	ESWE-9T04KX-D10			
					575 / 120	ESWE-9T05KX-D10			
5	5	10	15	10 - 16	240 / 120	ESWE-18T02KX-D11	$1,155	E-1	
					480 / 120	ESWE-18T04KX-D11			
					575 / 120	ESWE-18T05KX-D11			
7-1/2	7-1/2	15	15	16 - 20	240 / 120	ESWE-25T02KX-D12	$1,175	E-1	
					480 / 120	ESWE-25T04KX-D12			
					575 / 120	ESWE-25T05KX-D12			
10	10	20	25	25 - 32	240 / 120	ESWE-40T02KX-D14	$1,260	E-1	
					480 / 120	ESWE-40T04KX-D14			
					575 / 120	ESWE-40T05KX-D14			

Notes:
(1) Please contact your local WEG representative for starters with 575V control voltage.
(2) 3-phase starters with 120V coil are pre-wired for separate control
(3) 3-phase starters can be wired for single-phase applications

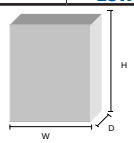

Dimensions (inches)			
Box Size	Enclosure Size		
	H	W	D
E-1	14.2	9.9	6.6

Data subject to change without notice.

Combination Type-F Across The Line Starter

THREE-PHASE without Control Power Transformer

- Branch Disconnect: Rotary through-the-door Handle
- Short-Circuit Protection: Manual Motor Protection
- Motor Control: Magnetic Contactor
- Overload Protection: Manual Motor Protection
- Control Devices: Hand-Off-Auto switch, Start-Stop pushbutton
- Other enclosue options available upon request

Combination Type-F Across The Line Starter with no CPT

Max. 3-ph Hp Motors				Overload Setting Range (A)	Control Voltage (1) (Vac)	Metallic Enclosure Type 4/12			Multiplier
200V	230V	460V	575V			Catalog Number	List Price	Box Size	
-	-	1/2	1/2	0.63 - 1.0	120	ESWF-9V18N4-D05	$1,225	F-1	Z3
					480	ESWF-9V47N4-D05			
1/4	1/3	3/4	1	1.0 - 1.6	120	ESWF-9V18N4-D06	$1,225	F-1	
					208-240	ESWF-9V24N4-D06			
					480	ESWF-9V47N4-D06			
1/2	1/2	1-1/2	1-1/2	1.6 - 2.5	120	ESWF-9V18N4-D07	$1,225	F-1	
					208-240	ESWF-9V24N4-D07			
					480	ESWF-9V47N4-D07			
3/4	1	2	3	2.5 - 4.0	120	ESWF-9V18N4-D08	$1,225	F-1	
					208-240	ESWF-9V24N4-D08			
					480	ESWF-9V47N4-D08			
1-1/2	1-1/2	3	5	4.0 - 6.3	120	ESWF-9V18N4-D09	$1,225	F-1	
					208-240	ESWF-9V24N4-D09			
					480	ESWF-9V47N4-D09			
3	3	5	7 1/2	6.3 - 10	120	ESWF-9V18N4-D10	$1,225	F-1	
					208-240	ESWF-9V24N4-D10			
					480	ESWF-9V47N4-D10			
5	5	10	15	10 - 16	120	ESWF-18V18N4-D11	$1,300	F-1	
					208-240	ESWF-18V24N4-D11			
					480	ESWF-18V47N4-D11			
7-1/2	7-1/2	15	15	16 - 20	120	ESWF-25V18N4-D12	$1,390	F-2	
					208-240	ESWF-25V24N4-D12			
					480	ESWF-25V47N4-D12			
10	10	20	25	25 - 32	120	ESWF-40V18N4-D14	$1,470	F-2	
					208-240	ESWF-40V24N4-D14			
					480	ESWF-40V47N4-D14			
-	15	25	30	32 - 40	120	ESWF-50V18N4-D19	$1,840	F-3	
					208-240	ESWF-50V24N4-D19			
					480	ESWF-50V47N4-D19			
15	15	30	40	40 - 50	120	ESWF-65V18N4-D20	$1,920	F-3	
					208-240	ESWF-65V24N4-D20			
					480	ESWF-65V47N4-D20			
20	20	40	60	50 - 65	120	ESWF-80V18N4-D21	$2,010	F-4	
					208-240	ESWF-80V24N4-D21			
					480	ESWF-80V47N4-D21			
20	25	50	60	55 - 75	120	ESWF-95V18N4-D22	$2,150	F-4	
					208-240	ESWF-95V24N4-D22			
					480	ESWF-95V47N4-D22			
25	30	60	75	70 - 90	120	ESWF-95V18N4-D23	$2,265	F-4	
					208-240	ESWF-95V24N4-D23			
					480	ESWF-95V47N4-D23			
30	30	75	100	80 - 100	120	ESWF-105V18N4-D24	$2,435	F-4	
					208-240	ESWF-105V24N4-D24			
					480	ESWF-105V47N4-D24			

Notes:

(1) Please contact your local WEG representative for starters with 575V control voltage.

(2) 3-phase starters with 120V coil are pre-wired for separate control

(3) 3-phase starters can be wired for single-phase applications

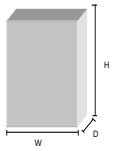

Dimensions (inches)			
Box Size	Enclosure Size		
	H	W	D
F-1	12	12	8
F-2	14	12	8
F-3	16	12	8
F-4	20	16	8

ESWF

Combination Type-F Across The Line Starter

THREE-PHASE with Control Power Transformer

- Branch Disconnect: Rotary through-the-door Handle
- Short-Circuit Protection: Manual Motor Protection
- Motor Control: Magnetic Contactor
- Overload Protection: Manual Motor Protection
- Control Devices: Hand-Off-Auto switch, Start-Stop pushbutton, control transformer
- Other enclosure options available upon request

ESWF Series - Combination Type-F Across The Line Starter with CPT

Max. 3-ph Hp Motors				Overload Setting Range (A)	Control Voltage (Vac)	Metallic Enclosure Type 4/12			Multiplier
200V	230V	460V	575V			Catalog Number	List Price	Box Size	
-	-	1/2	1/2	0.63 - 1.0	480 / 120	ESWF-9T04N4-D05	$1,325	F-1	Z3
					575 / 120	ESWF-9T05N4-D05			
1/4	1/3	3/4	1	1.0 - 1.6	240 / 120	ESWF-9T02N4-D06	$1,325	F-1	
					480 / 120	ESWF-9T04N4-D06			
					575 / 120	ESWF-9T05N4-D06			
1/2	1/2	1-1/2	1-1/2	1.6 - 2.5	240 / 120	ESWF-9T02N4-D07	$1,325	F-1	
					480 / 120	ESWF-9T04N4-D07			
					575 / 120	ESWF-9T05N4-D07			
3/4	1	2	3	2.5 - 4.0	240 / 120	ESWF-9T02N4-D08	$1,325	F-1	
					480 / 120	ESWF-9T04N4-D08			
					575 / 120	ESWF-9T05N4-D08			
1 1/2	1 1/2	3	5	4.0 - 6.3	240 / 120	ESWF-9T02N4-D09	$1,325	F-1	
					480 / 120	ESWF-9T04N4-D09			
					575 / 120	ESWF-9T05N4-D09			
3	3	5	7 1/2	6.3 - 10	240 / 120	ESWF-9T02N4-D10	$1,325	F-1	
					480 / 120	ESWF-9T04N4-D10			
					575 / 120	ESWF-9T05N4-D10			
5	5	10	15	10 - 16	240 / 120	ESWF-18T02N4-D11	$1,400	F-1	
					480 / 120	ESWF-18T04N4-D11			
					575 / 120	ESWF-18T05N4-D11			
7- /2	7 1/2	15	15	16 - 20	240 / 120	ESWF-25T02N4-D12	$1,490	F-2	
					480 / 120	ESWF-25T04N4-D12			
					575 / 120	ESWF-25T05N4-D12			
10	10	20	25	25 - 32	240 / 120	ESWF-40T02N4-D14	$1,620	F-2	
					480 / 120	ESWF-40T04N4-D14			
					575 / 120	ESWF-40T05N4-D14			
-	15	25	30	32 - 40	240 / 120	ESWF-50T02N4-D14	$1,990	F-3	
					480 / 120	ESWF-50T04N4-D19			
					575 / 120	ESWF-50T05N4-D19			
15	15	30	40	40 - 50	240 / 120	ESWF-65T02N4-D20	$2,120	F-3	
					480 / 120	ESWF-65T04N4-D20			
					575 / 120	ESWF-65T05N4-D20			
20	20	40	60	50 - 65	240 / 120	ESWF-80T02N4-D21	$2,210	F-4	
					480 / 120	ESWF-80T04N4-D21			
					575 / 120	ESWF-80T05N4-D21			
20	25	50	60	55 - 75	240 / 120	ESWF-95T02N4-D22	$2,350	F-4	
					480 / 120	ESWF-95T04N4-D22			
					575 / 120	ESWF-95T05N4-D22			
25	30	60	75	70 - 90	240 / 120	ESWF-95T02N4-D23	$2,465	F-4	
					480 / 120	ESWF-95T04N4-D23			
					575 / 120	ESWF-95T05N4-D23			
30	30	75	100	80 - 100	240 / 120	ESWF-105T02N4-D24	$2,635	F-4	
					480 / 120	ESWF-105T04N4-D24			
					575 / 120	ESWF-105T05N4-D24			

Notes:
(1) Please contact your local WEG representative for starters with other control voltage.
(2) 3-phase starters can be wired for single-phase applications

Dimensions (inches)			
Box Size	Enclosure Size		
	H	W	D
F-1	12	12	8
F-2	14	12	8
F-3	16	12	8
F-4	20	16	8

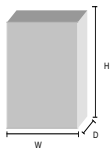

Data subject to change without notice.

Dimensions (in) - ESWC Series
Type 4 / 12 – Metallic Enclosure

Size C-1

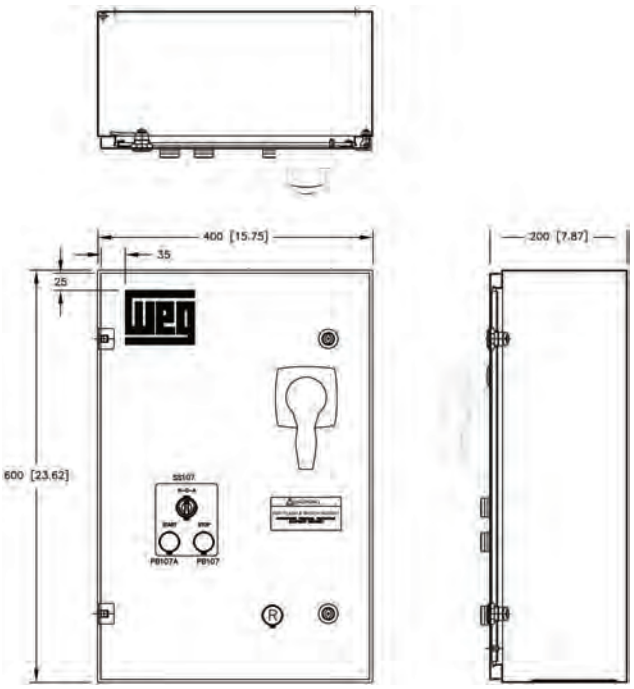

Size C-2

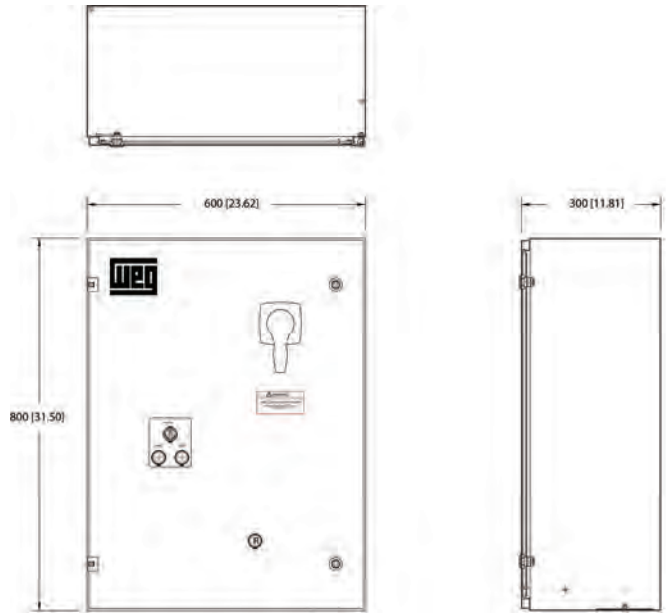

Size C-3

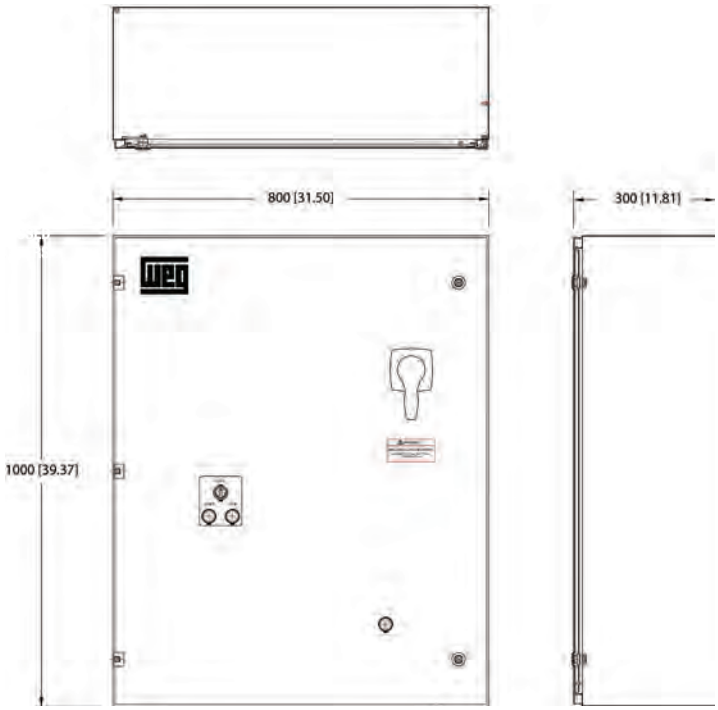

Dimensions (in) – ESWF SERIES
Type 4 / 12 – Metallic Enclosure

Size GX

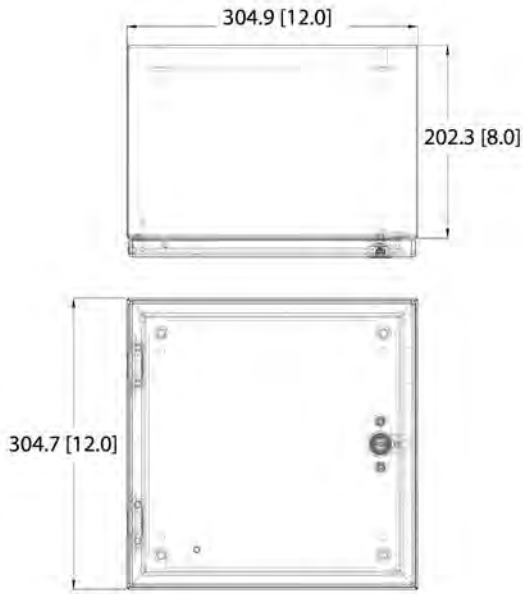

Size I

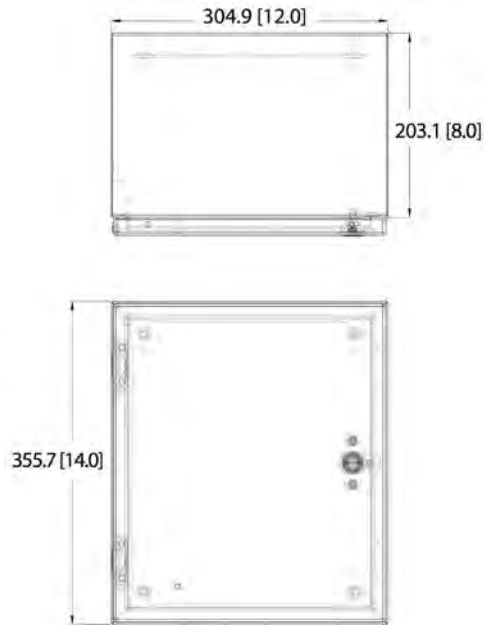

Size K

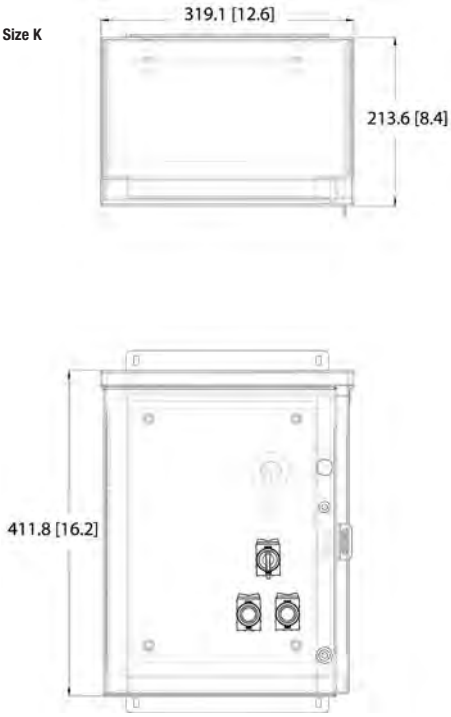

Size L

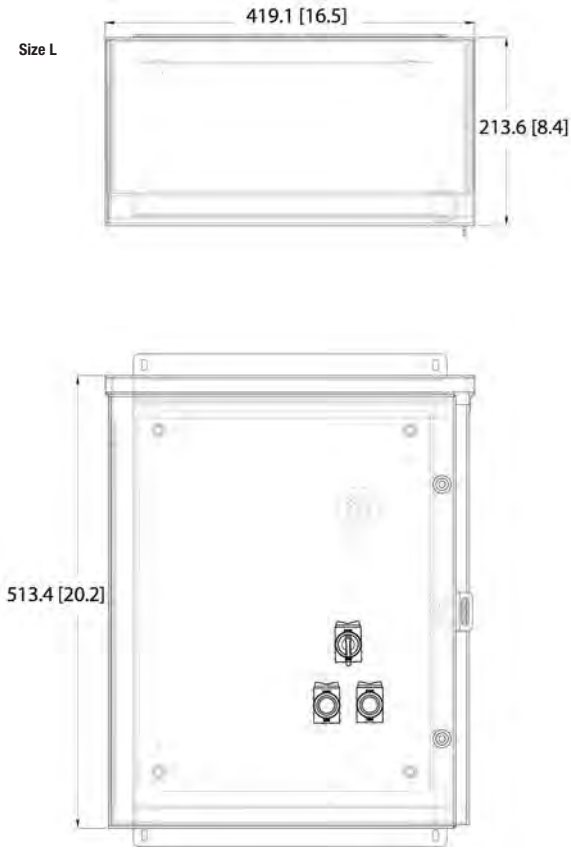

Data subject to change without notice.

Motor Control for Hazardous Areas: Class I, Groups C & D - Class II, Groups E, F, G

WEG Explosion Proof Motors Starters are the perfect compliment for motor control in Hazardous and Industrial environments. Applications include Oil & Gas, Mining, and Chemical Processing industries.

ESWX-M Series - Enclosed Manual Motor Starters

- High short-circuit interrupting rating – up to 50kA @ 480V
- Thermal overload protection Class 10
- Phase loss sensitivity protection
- Ambient temperature compensation -4ºF +140ºF (-20ºC +60ºC)
- Lockable rotary handle mechanism for disconnect
- Snap-in accessories
- Finger safe protected terminals
- Test trip feature
- Manual Motor Starters
- Suitable for motor disconnect applications
- UL Type-E self protected combination starter (available on request)

ESWX Series - Enclosed Starters

- Copper free aluminum alloy body
- Bolted flange design
- Durable cast on lugs
- Watertight ‘O’ Rings for NEMA 4 applications
- Hinged door for easier access
- NEMA 7 / 9 housing
- Class I, Groups C & D - Class II, Groups E, F, G
- Starter includes contactor plus overload relay
- Start Stop Reset buttons (Standard)
- HOA or Pilot Light (optional)
- Available up to 75 hp @ 460 Vac – 100 amps
- NEMA rated starters available from size 00 to size 3 on request

Custom units also available on request.

ESWX

Motor Control for Hazardous Areas: Class I, Groups C & D - Class II, Groups E, F, G

WEG Explosion Proof Motors Starters are the perfect compliment for motor control in Hazardous and Industrial environments. Applications include Oil & Gas, Mining, and Chemical Processing industries.

Enclosure Specifications

- Versatile mounting format
- Corrosion resistant, copper free aluminum alloy body
- Bolted flange design
- Durable cast on lugs
- Watertight 'O' Rings for NEMA 4X applications
- Lockout device on cover
- Rotary Handle units include hinged door for easier access
- NEMA 4X / 7 / 9 housing
- ON/OFF - Rotary Handle or Start/Stop - Push buttons
- Rotary Lockable handle
- Available up to 75 hp @ 460 Vac – 100 amps

Explosion Proof Manual Motor Starters ESWX-M16 Series

- Versatile mounting
- NEMA 4X / 7 / 9 housing
- Start & Stop /Reset pushbuttons
- Lockable in OFF position
- Available up to 10 hp @ 460 Vac – 16 amps

ESWX-M16 - PRODUCT SELECTION

Max 3 Phase UL HP			Thermal Setting	Short-Circuit interruption capacity		Catalog Number	List Price	Multiplier
Three Phase								
230V	460V	575V	[A]	480 Vac	600 Vac			
-	1/2	1/2	0.63 - 1.0	50kA	10kA	ESWX-M16A79-U001	$1,595	Z33
-	3/4	3/4	1.0 - 1.6	50kA	10kA	ESWX-M16A79-D016	$1,595	
1/2	1	1 1/2	1.6 - 2.5	50kA	10kA	ESWX-M16A79-D025	$1,595	
3/4	2	3	2.5 - 4.0	50kA	10kA	ESWX-M16A79-U004	$1,595	
1 1/2	3	5	4.0 - 6.3	50kA	10kA	ESWX-M16A79-D063	$1,595	
3	5	7 1/2	6.3 - 10	50kA	5kA	ESWX-M16A79-U010	$1,595	
5	10	10	10 - 16	30kA	5kA	ESWX-M16A79-U016	$1,595	

Data subject to change without notice.

M25 Series

- NEMA 4X / 7 / 9 housing
- Hinged Cover for easy access
- ON / OFF – Rotary Handle
- Lockable in OFF position
- Available up to 20 hp @ 460 Vac– 32 amps

ESWX-M25 - PRODUCT SELECTION

Max 3 Phase UL HP Three Phase			Thermal Setting	Short-Circuit interruption capacity		Catalog Number	List Price	Multiplier
230V	460V	575V	[A]	480 Vac	600 Vac			
-	1/2	1/2	0.63 - 1.0	50kA	25kA	ESWX-M25R79-U001	$2,200	Z33
-	3/4	3/4	1.0 - 1.6	50kA	25kA	ESWX-M25R79-D016	$2,200	
1/2	1	1 1/2	1.6 - 2.5	50kA	25kA	ESWX-M25R79-D025	$2,200	
3/4	2	3	2.5 - 4.0	50kA	25kA	ESWX-M25R79-U004	$2,200	
1 1/2	3	5	4.0 - 6.3	50kA	25kA	ESWX-M25R79-D063	$2,200	
3	5	7 1/2	6.3 - 10	50kA	25kA	ESWX-M25R79-U010	$2,200	
5	10	15	10 - 16	50kA	25kA	ESWX-M25R79-U016	$2,200	
7 1/2	15	15	16 - 20	50kA	25kA	ESWX-M25R79-U020	$2,200	
7 1/2	15	20	20 - 25	50kA	25kA	ESWX-M25R79-U025	$2,200	
10	20	25	25 - 32	42kA	25kA	ESWX-M25R79-U032	$2,200	

ESWX-M65 Series

- NEMA 4X / 7 / 9 housing
- Hinged Cover for easy access
- ON / OFF – Rotary Handle
- Lockable in OFF position
- Available up to 50 hp @ 460 Vac – 65 amps

ESWX-M65 - PRODUCT SELECTION

Max 3 Phase UL HP Three Phase			Thermal Setting	Short-Circuit interruption capacity		Catalog Number	List Price	Multiplier
230V	460V	575V	[A]	480 Vac	600 Vac			
15	25	30	32 - 40	35kA	10kA	ESWX-M65R79-U040	$2,600	Z33
15	30	40	40 - 50	35kA	10kA	ESWX-M65R79-U050	$2,600	
20	50	60	50 - 65	35kA	10kA	ESWX-M65R79-U065	$2,600	

ESWX-M100 Series

- NEMA 4X / 7 / 9 housing
- Hinged Cover for easy access
- ON / OFF – Rotary Handle
- Lockable in OFF position
- Available up to 75 hp @ 460 Vac – 100 amps

ESWX-M100 - PRODUCT SELECTION

Max 3 Phase UL HP Three Phase			Thermal Setting	Short-Circuit interruption capacity		Catalog Number	List Price	Multiplier
230V	460V	575V	[A]	480 Vac	600 Vac			
25	50	60	55 - 75	50kA	10kA	ESWX-M100R79-U075	$3,350	Z33
30	60	75	70 - 90	50kA	10kA	ESWX-M100R79-U090	$3,350	
30	75	100	80 - 100	50kA	10kA	ESWX-M100R79-U100	$3,350	

ESWX

ACCESSORIES FOR MPW18 / 40 / 65 - Summary

Description	Catalog Number	List Price	Multiplier
Auxiliary Contact Blocks			
1NO&1NC auxiliary contact block front mounting - 250Vmax.	ACBF-11	$20	Z4
1NO&1NC auxiliary contact block left side mounting - 600Vmax.	ACBS-11	$22	
2NO Auxiliary contact block left side mounting - 600Vmax.	ACBS-20	$22	
2NC Auxiliary contact block left side mounting - 600Vmax.	ACBS-02	$22	
Under Voltage and Shunt Block Releases			
Shunt release block right side mounting - 20-24V 50/60Hz	SRMP D51	$56	Z4
Shunt release block right side mounting - 100-127V 50/60Hz	SRMP D59	$56	
Shunt release block right side mounting - 200-240V 50/60Hz	SRMP D65	$56	
Under voltage release block right side mounting - 24V 60Hz	URMP D02	$56	
Under voltage release block right side mounting - 120V 60Hz	URMP V18	$56	
Under voltage release block right side mounting - 208V 60Hz	URMP V23	$56	
Under voltage release block right side mounting - 240V 60Hz	URMP V30	$56	
Under voltage release block right side mounting - 480V 60Hz	URMP V47	$56	

ACCESSORIES FOR MPW100 - Summary

Description	Catalog Number	List Price	Multiplier
Auxiliary Contact Blocks			
1NO&1NC auxiliary contact block front mounting - 250Vmax.	ACBF-11 MPW100	$35	Z4
1NO&1NC auxiliary contact block left side mounting - 600Vmax.	ACBS-11 MPW100	$27	
2NO Auxiliary contact block left side mounting - 600Vmax.	ACBS-20 MPW100	$27	
2NC Auxiliary contact block left side mounting - 600Vmax.	ACBS-02 MPW100	$27	
Under Voltage and Shunt Block Releases			
Shunt release block right side mounting - 120V 50/60Hz	SRMP V18 MPW100	$56	Z4
Shunt release block right side mounting - 240-260V 60Hz	SRMP V33 MPW100	$56	
Under voltage release block right side mounting - 120V 60Hz	URMP V18 MPW100	$56	
Under voltage release block right side mounting - 240V 60Hz	URMP V33 MPW100	$56	
Under voltage release block right side mounting - 460V 60Hz	URMP V43 MPW100	$56	

Data subject to change without notice.

NEMA 7/9 Enclosure – Three Phase

- Motor Control: Magnetic Contactor
- Overload Protection: Thermal Overload Relay
- Control Devices: START STOP RESET Pusbuttons
  – H.O.A. and Pilot Lights available on request
- Cast Aluminum NEMA 7/9 housing with NEMA 4 gasket
  – Breather & Drain available on request

ESWX Series - Non-combination Across The Line Starter for use in Hazardous Areas
ENCLOSURE TYPE NEMA 7/9

Max. UL 3 Phase Horsepower				Box	Setting Range	Coil Voltage	RESET only		START + STOP + RESET		Multiplier
200V	230V	460V	575V				Catalog Number	List Price	Catalog Number	List Price	
-	1/3	1/2	-	X04	0.8 - 1.2	120	ESWX-25V18E79-R23	$3,250	ESWX-25V18A79-R23	$3,850	Z33
						208-240	ESWX-25V24E79-R23		ESWX-25V24A79-R23		
						480	ESWX-25V47E79-R23		ESWX-25V47A79-R23		
-	-	1	1	X04	1.2 - 1.8	120	ESWX-25V18E79-R24	$3,250	ESWX-25V18A79-R24	$3,850	
						480	ESWX-25V47E79-R24		ESWX-25V47A79-R24		
1/2	3/4	1-1/2	2	X04	1.8 - 2.8	120	ESWX-25V18E79-R25	$3,250	ESWX-25V18A79-R25	$3,850	
						208-240	ESWX-25V24E79-R25		ESWX-25V24A79-R25		
						480	ESWX-25V47E79-R25		ESWX-25V47A79-R25		
1	1	2	3	X04	2.8 - 4.0	120	ESWX-25V18E79-R26	$3,250	ESWX-25V18A79-R26	$3,850	
						208-240	ESWX-25V24E79-R26		ESWX-25V24A79-R26		
						480	ESWX-25V47E79-R26		ESWX-25V47A79-R26		
1-1/2	1-1/2	3	5	X04	4.0 - 6.3	120	ESWX-25V18E79-R27	$3,250	ESWX-25V18A79-R27	$3,850	
						208-240	ESWX-25V24E79-R27		ESWX-25V24A79-R27		
						480	ESWX-25V47E79-R27		ESWX-25V47A79-R27		
2	2	5	-	X04	5.6 - 8.0	120	ESWX-25V18E79-R28	$3,250	ESWX-25V18A79-R28	$3,850	
						208-240	ESWX-25V24E79-R28		ESWX-25V24A79-R28		
						480	ESWX-25V47E79-R28		ESWX-25V47A79-R28		
3	3	-	7-1/2	X04	7.0 - 10	120	ESWX-25V18E79-R29	$3,250	ESWX-25V18A79-R29	$3,850	
						208-240	ESWX-25V24E79-R29		ESWX-25V24A79-R29		
-	-	7-1/2	10	X04	8.0 - 12.5	120	ESWX-25V18E79-R30	$3,250	ESWX-25V18A79-R30	$3,850	
						480	ESWX-25V47E79-R30		ESWX-25V47A79-R30		
5	5	10	15	X04	11 - 17	120	ESWX-25V18E79-R32	$3,250	ESWX-25V18A79-R32	$3,850	
						208-240	ESWX-25V24E79-R32		ESWX-25V24A79-R32		
						480	ESWX-25V47E79-R32		ESWX-25V47A79-R32		
7-1/2	7-1/2	15	-	X04	15 - 23	120	ESWX-25V18E79-R33	$3,250	ESWX-25V18A79-R33	$3,850	
						208-240	ESWX-25V24E79-R33		ESWX-25V24A79-R33		
						480	ESWX-25V47E79-R33		ESWX-25V47A79-R33		
10	10	20	25	X04	22 - 32	120	ESWX-40V18E79-R34	$3,300	ESWX-40V18A79-R34	$3,950	
						208-240	ESWX-40V24E79-R34		ESWX-40V24A79-R34		
						480	ESWX-40V47E79-R34		ESWX-40V47A79-R34		
10	15	30	-	X04	25 - 40	120	ESWX-40V18E79-R35	$3,300	ESWX-40V18A79-R35	$3,950	
						208-240	ESWX-40V24E79-R35		ESWX-40V24A79-R35		
						480	ESWX-40V47E79-R35		ESWX-40V47A79-R35		
15	15	30	40	X04	32 - 50	120	ESWX-80V18E79-R38	$3,400	ESWX-80V18A79-R38	$4,050	
						208-240	ESWX-80V24E79-R38		ESWX-80V24A79-R38		
						480	ESWX-80V47E79-R38		ESWX-80V47A79-R38		
20	20	40	50	X04	40 - 57	120	ESWX-80V18E79-R39	$3,400	ESWX-80V18A79-R39	$4,050	
						208-240	ESWX-80V24E79-R39		ESWX-80V24A79-R39		
						480	ESWX-80V47E79-R39		ESWX-80V47A79-R39		
-	25	50	60	X04	57 - 70	120	ESWX-80V18E79-R41	$3,420	ESWX-80V18A79-R41	$4,050	
						208-240	ESWX-80V24E79-R41		ESWX-80V24A79-R41		
						480	ESWX-80V47E79-R41		ESWX-80V47A79-R41		
25	30	60	75	X04	63 - 80	120	ESWX-105V18E79-R43	$3,870	ESWX-105V18A79-R43	$4,600	
						208-240	ESWX-105V24E79-R43		ESWX-105V24A79-R43		
						480	ESWX-105V47E79-R43		ESWX-105V47A79-R43		
30	-	75	-	X04	75 - 97	120	ESWX-105V18E79-R44	$3,870	ESWX-105V18A79-R44	$4,600	
						480	ESWX-105V47E79-R44		ESWX-105V47A79-R44		
-	40	-	-	X04	90 - 112	120	ESWX-105V18E79-R45	$3,870	ESWX-105V18A79-R45	$4,600	
						208-240	ESWX-105V24E79-R45		ESWX-105V24A79-R45		

Notes:
1) Overload Relay dial must be set with FLA of the motor
2) 3-phase starters with 120V coil are pre-wired for separate control
3) 3-phase starters can be wired for single-phase applications

ESWX

Explosion Proof Manual Starters
Dimensions (in) ESWX-M18

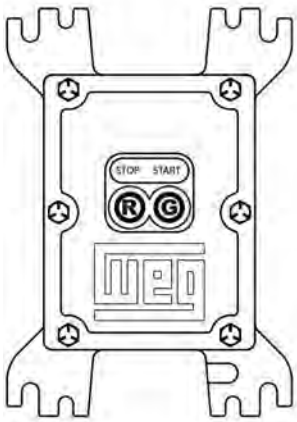

FRONT

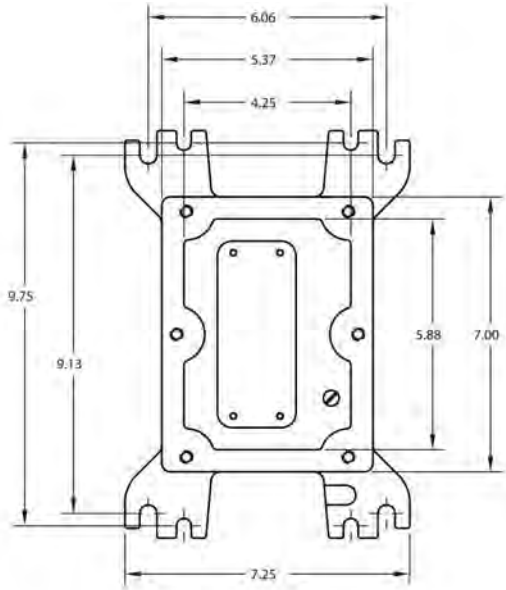

FRONT
(w/DOOR REMOVED)

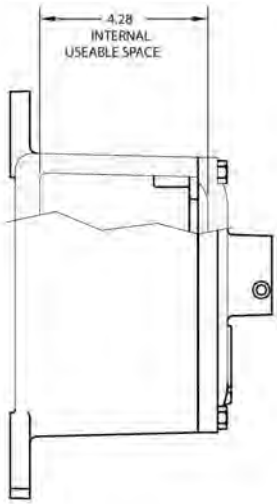

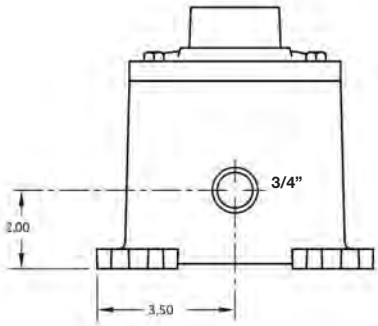

BOTTOM

Certifications
Class I, Groups C & D
Class II, Groups E, F, & aG
UL Standard 1203 (Classified)
NEMA 7 (C&D), 9 (E, F, & G)

CLASSIFIED UL

Data subject to change without notice.

Explosion Proof Manual Starters
Dimensions (in) ESWX-M40 and ESWX-M65

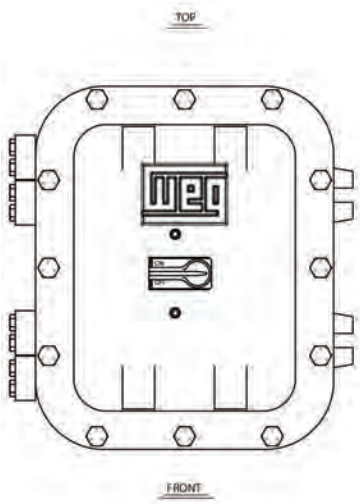

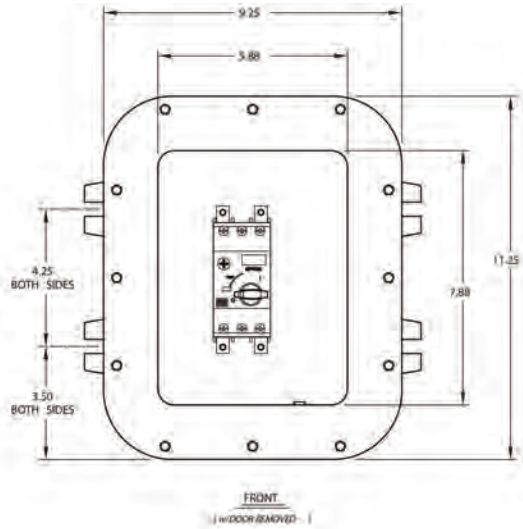

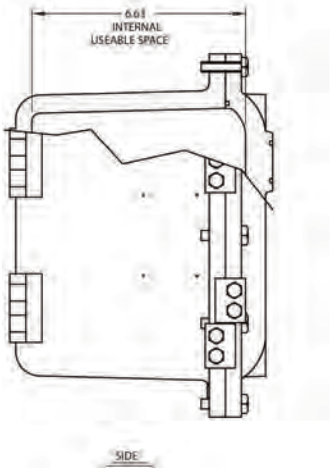

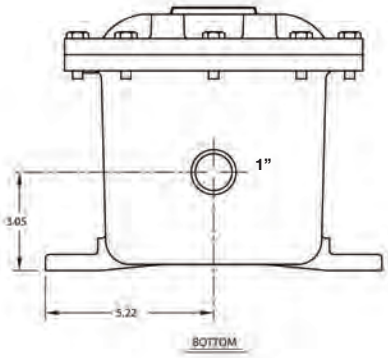

Dimensions (in) ESWX-M100

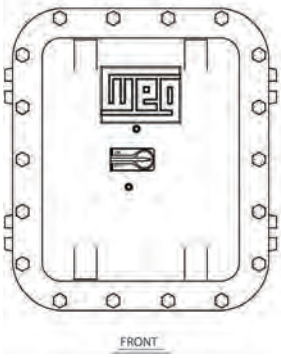

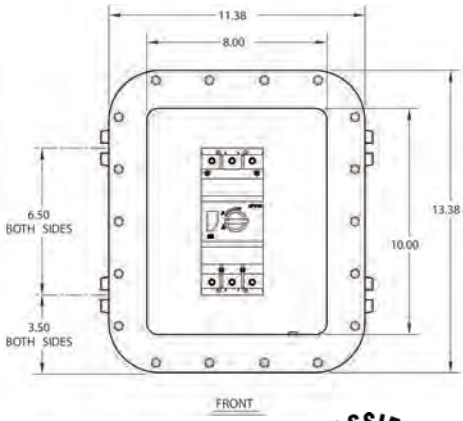

Certifications
Class I, Groups C & D
Class II, Groups E, F, & aG
UL Standard 1203 (Classified)
NEMA 7 (C&D), 9 (E, F, & G)

ESWX

Explosion Proof Non-Combination Starters
Dimensions (in) ESWX SERIES
Type-NEMA 7/9 - Cast Aluminum Enclosure

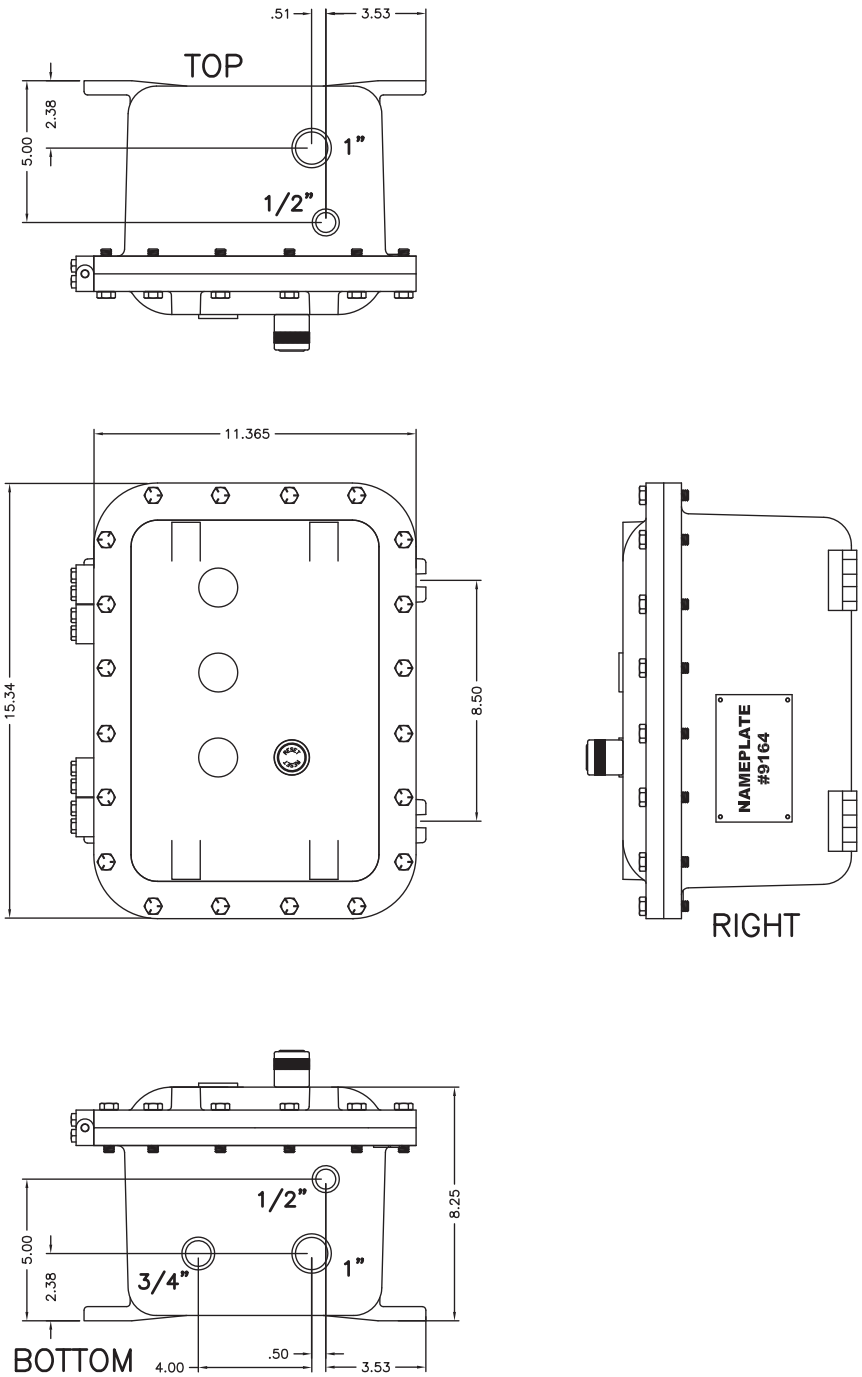

Data subject to change without notice.

CUSTOM CONTROL PANELS

DATA WORKSHEET AND REQUEST FOR QUOTE

REP*		ASE*		NEED QUOTE BY*	
TAM*		TSS*		REQUESTED SHIP DATE*	

1. CUSTOMER INFO:

1.1 COMPANY NAME		1.3 CUSTOMER PHONE	
1.2 CONTACT NAME		1.4 END USER NAME	

2. SUPPORTING PRODUCT INFO:

2.1 PRODUCT INFO*	
2.1.A ENTER P/N	

3. LOAD DATA:

3.1 MOTOR HP*		3.2 MOTOR FLA*		3.3 SERVICE FACTOR	
3.4 OTHER LOAD DATA					

4. POWER AND WIRING:

4.1 PHASE*		4.2 INCOMING VOLTAGE (V)*	
4.3 FREQUENCY*		4.4 PORTABLE GENERATOR POWER?*	

5. APPLICATION & ENVIRONMENT:

5.1 STARTING METHOD*		5.1.A OTHER STARTING METHOD?*			
5.2 ENCLOSURE TYPE* (METALIC TYPE 1, 12, ETC		5.3 SPECIFY AMBIENT TEMPERATURE IF UNIT INSTALLED OUTDOORS		5.4 SPECIFY ALTITUED IF UNIT INTSTALLED ABOVE 6,5000 FT	
5.5 REPLACING STANDARD NEMA SIZE?*		5.6 MAXIMUM NUMBER OF STARTS PER HOUR*		5.7 OTHER INFORMATION	

6. CIRCUIT PROTECTION:

6.1 PROTECTIVE DEVICE*		7.1 COMMON CONTROL (SAME AS VOLTAGE TO MOTOR?)*		7.2 CPT REQUIRED?*	
6.1.A OTHER PROTECTIVE DEVICE		7.3 TRANSFORMER WITH EXTRA VA CAPACITY?*			

7. CONTROL CIRCUIT:

8. COVER MOUNTED 22mm DEVICES: (IF YES, ENTER QUANTITIES)

22MM RESET PBS ARE CONSIDERED BASED ON PANEL CONFIGURATION. IF RESET PBS ARE NOT NEEDED, PLEASE SPECIFY.

8.1 START/STOP PUSH BUTTONG		8.2 H-O-A SELECTOR SWITCH		8.3 OFF-ON SELECTOR SWITCH		8.4 RUN LIGHT		8.5 POWER ON LIGHT		8.6 E-STOP PUSH BUTTON	
8.7 OTHER (SPECIFY)											

9. OTHER SPECIFICATIONS:

*REQUIRED FIELDS

WHEN COMPLETED, PLEASE CONTACT YOUR REQIONAL WEG SALES SPECIALIST AT 1-900-ASK-4WEG (275-4934) FOR DIRECTIONS ON SUBMITTAL FOR QUTATION. WEG CAN HELP YOU COMPLETE ANY FURTHER PERTINENT INFORMATION TO QUOTE.

MEDIUM VOLTAGE STARTERS

The SSW7000C uses state-of-the-art technology to provide start / stop control and protection for three-phase induction and synchronous motors. Developed to ensure excellent performance, it prevents mechanical shocks to the drivetrain, protects the motor against related burnouts or current surges in the power supply and thus offers a complete solution for various applications.

Applications

- Blowers
- Compressors
- Conveyors
- Chippers
- Fans
- Exhausters
- Pumps

Industries

- Chemical, Petrochemical, Oil and Gas
- Cement and Mining
- Steel and Metallurgy
- Sugar and Chemical
- Pulp and Paper
- Water and Waste Water Management

Data subject to change without notice.

SSW7000C

Standard Features:

- Motor voltage: 2.3kV, 4.16kV
- Power: 400 hp to 3500 hp
- Protection Degree : NEMA12, IP 41
- Operating interface (HMI) with graphic LCD
- Real time clock
- Main and bypass vacuum contactors
- Medium voltage fuses
- Power and control insulated by fiber optics
- Soft PLC Function
- License Free programming software SuperDrive and WLP
- Motor thermal protection - PT100 (accessory), 8 Channels
- Ground Fault Protection - standard
- 5 start modes
- Network communication boards (accessories): DeviceNet, Profibus-DP, Ethernet and Modbus, RS-232 or RS-485
- Flash Memory Module (accessory)

Advantages:

- Flexible Torque control
- Overload capacity of 400% for 20 s. (2x / hour duty cycle)
- Management of Demand restrictions by the electric company
- Bumpless starting
- Motor protection
- Mechanical wear reduction
- Handles lower inrush current limitations of power supply

Special Features:

- Clean Assembly with easy accessibility to all components
- Flexible Torque Control (FTC), by employing torque estimation using vector control principle and measurement of input voltage, output voltage and output current. This provides more accurate torque set-points, compared to estimating torque values only via current measurement.
- Active Protection offers complete motor protection in DOL START and RUN mode. This eliminates need for any expensive motor protection relays for backup protection.
- Optimized heat-sink design for balanced, compact cooling
- Power stacks are light weight, independent phase modules for ease of handling
- Ground Fault protection is standard
- Flexible Thermal Class Curve setup & selection that eliminates need for third party expensive protection relays
- Soft PLC function with license-free software
- Nickel plated bus bars and bus-stub connections provide corrosion resistance and ensure proper electrical connection
- Power connection terminals for TOP or BOTTOM motor connection
- Operator Interface (keypad, parameter setup) is identical to that of WEG's low voltage starter product line

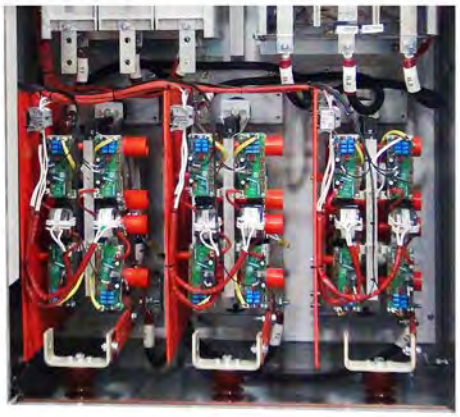

Certifications

MEDIUM VOLTAGE STARTERS

Product Code

SSW7000C Catalog Number Sequence

SSW7000C	100	T	4	11	N2

Motor Current
100

Protection Degree
N2 - NEMA 12

Power Supply
T - Three Phase

Single Phase Control Supply
110V AC, 1 ph

Rated Voltage
2 - 2.3kV
4 - 4.16kV

Rating

Power Supply	Catalog Number	Control Voltage	Motor Power		List Price	Multiplier
			HP*	kW		
2300V, 3PH, 60HZ	SSW7000C100T211N2	110V, 1Ph	400	300	$58,322	E3
	SSW7000C120T211N2	110V, 1Ph	500	373	$58,684	
	SSW7000C150T211N2	110V, 1Ph	600	450	$60,294	
	SSW7000C180T211N2	110V, 1Ph	750	560	$61,749	
	SSW7000C210T211N2	110 V, 1Ph	950	700	$62,570	
	SSW7000C240T211N2	110V, 1Ph	1100	800	$63,851	
	SSW7000C300T211N2	110 V, 1Ph	1350	1000	$69,396	
	SSW7000C370T211N2	110V, 1Ph	1650	1200	$70,960	
	SSW7000C430T211N2	110V, 1Ph	1900	1400	$73,789	
4160V, 3PH, 60HZ	SSW7000C100T411N2	110V, 1Ph	750	560	$65,721	
	SSW7000C120T411N2	110V, 1Ph	1000	750	$67,347	
	SSW7000C150T411N2	110V, 1Ph	1250	925	$68,901	
	SSW7000C180T411N2	110V, 1Ph	1500	1100	$70,728	
	SSW7000C210T411N2	110 V, 1Ph	1750	1300	$71,560	
	SSW7000C240T411N2	110V, 1Ph	2000	1500	$73,235	
	SSW7000C300T411N2	110 V, 1Ph	2500	1850	$80,861	
	SSW7000C370T411N2	110V, 1Ph	3000	2250	$82,080	
	SSW7000C430T411N2	110V, 1Ph	3500	2600	$86,656	

Note: (*) The motor power ratings given above are based on WEG 4-pole motors, 4.16kV, 60-Hz, PF=0.87, Eff=0.97, SF=1.
For applications with high overloads or special starting conditions, contact WEG's sales force.
Current Rating of SSW7000C must be calculated based on the information on load type, load speed/torque curve and required number of starts per hour.
All models are available in 220V, 1Ph control voltage.

Data subject to change without notice.

Options

Reference	Description	Slot	List Price	Multiplier
Control accessories to install in Slots 1, 2 and 3				
IOE-04	Module for 8 temperature sensors PT100	1 and 2	$2795	E3
RS485-01	RS-485 serial communication module (Modbus)	3	$240	
RS232-01	RS-232C serial communication module (Modbus)		$180	
RS232-02	RS-232C serial communication module with switch to program the microcontroller FLASH memory		$180	
Anybus-CA Accessories to install in Slots 4				
PROFDP-05	ProfibusDP interface module	4	$1100	E3
DEVICENET-05	Devicenet interface module			
ETHERNET/IP-05	EtherNet/IP interface module			
RS232-05	RS-232 interface module (passive) (Modbus)		$290	
RS485-05	RS485 interface module (passive) (Modbus)		$360	
Flash Memory Module to install in Slot 5 - Included in Standard Models				
MMF-01	FLASH memory module	5	$71	V1
Other Accessories				
HMI-01	Man Machine Interface – MMI (sold separately) (1)	-	$320	V1
RHMIF-01	Frame kit for MMI (protection rate IP56)		$69	

Dimensions

Block Diagram

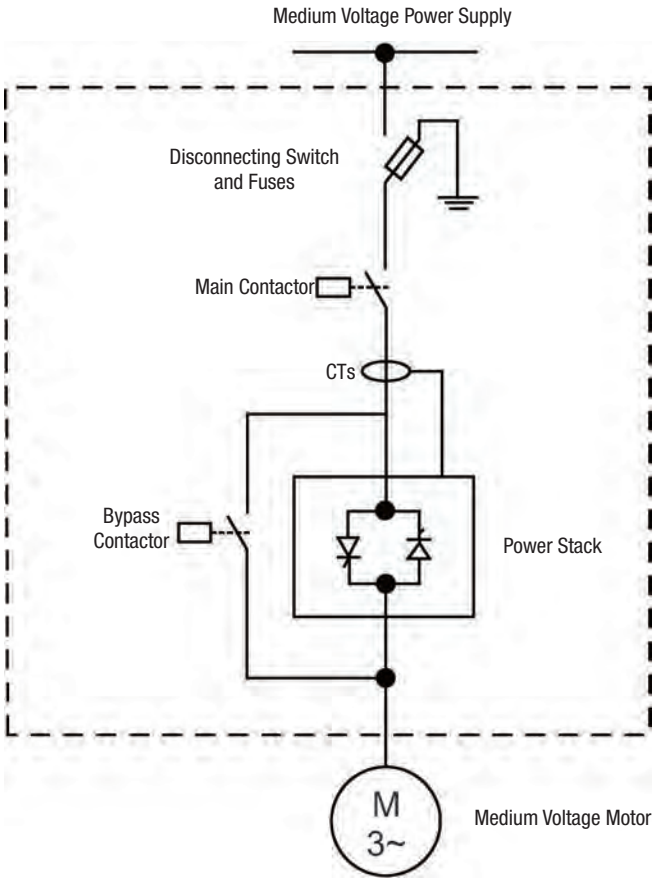

Standards

ANSI/IEEE C37.2	Function/Protection Feature	Standard	Option
19	Reduced Voltage Starting and Bypass	■	
27	Undervoltage protection	■	
37	Undercurrent protection	■	
46	Phase-Balance Current protection	■	
47	Phase Sequence	■	
48	Incomplete Sequence	■	
50	Instantaneous Overcurrent trip	■	
51	Overcurrent trip	■	
55	Power Factor check	■	
59	Overvoltage	■	
81	Frequency check	■	
86	Lockout Relay - electronic	■	
50N/51G	Ground fault detection instantaneous and fault-current	■	
49 & 38	Winding Temperature and Bearing Temperature		□

Data subject to change without notice.

Technical specifications

Power Supply	Power Voltage (R/1 L1, S/3L2, T/5L3)	Low voltage test: 500Vac: (-60% to +10%) or (200 to 550Vca) Models: 2300Vac: (-60% to +10%) or (920 to 2530Vca) 4160Vac: (-60% to +10%) or (2760 to 4576Vca)
	Frequency	(50 to 60Hz): (±10%) or (45 to 66Hz)
Capacity	Maximum number of starts	5 starts in 2 hours (One start every 30 minutes)
	Start cycle	AC-53a; 4.5-30:50-2
Thyristors	Medium voltage SCR per power arm	2300Vac: 2 thyristors per per power stack 4160Vac: 2 coupled pairs of thyristors
	Reverse voltage peak on the arm	2300Vac: 6.5kV 4160Vac: 13kV
Protections	Protection by Hardware	dv/dt filter Active overvoltage protection on the thyristors
Control Supply	Control voltage	As per code of the SSW7000: 110Vac: (-15% to10%) or (93.5 to 121Vac) 230Vac: (-15% to 10%) or (195.6 to 253Vac)
	Frequency	(50 to 60Hz): (±10%) or (45 to 66Hz)
	Consumption	Continuous: 900 mA Peak: 9.5 A (during the closing of the vacuum contactors)
Control	Method	Voltage ramp. Current limitation. Pump control. Torque control. Current ramp.
Inputs	Digital	6 insulated digital inputs, 24 Vdc, programmable functions
	Analog	2 differential inputs insulated by differential amplifier; AI1 resolution: 12 bits, AI2 resolution: 11bits + signal, (0 to 10) V, (0 to 20) mA or (4 to 20) mA, Impedance: 400kQ for (0 to 10V), 500Q for (0 to 20mA) or (4 to 20mA), programmable functions
Outputs	Digital	3 NO/NC contact relays, 240 Vac, 1A, programmable functions.
	Analog	2 insulated outputs, (0 to 10V) RL ± 10kQ (maximum load), 0 to 20mA or 4 to 20mA RL<500Q, 11-bit resolution, programmable functions
Man Machine Interface	Standard	9 keys: Turn/Stop, Increase, Decrease, Rotation Direction, Jog, Local/Remote, right Soft key and left Soft key. Graphic LCD. It enables access to/change of all parameters.
Safety	Main protections	Under and Overcurrent and current unbalance. Under and Overvoltage and voltage unbalance. Under and Overtorque and Active overpower Phase loss. Reverse phase sequence Overtemperature in the power racks. Motor overload. Motor overtemperature (optional). External defect. Ground fault by voltage or current. Fault in the power racks. Fault in the power contactors. Faults in the control boards. Communication faults of MMI and between controls. Faults in the communication networks. Programming errors. For further details and more protections implemented, refer to the programming manual.
Protection degree	IP41	Standard panel
PC connection for programming	USB Connector	USB standard Rev. 2.0 (basic speed). USB plug type B “device”. Interconnecting Cable: standard host/device shielded USB cable
Environmental Conditions	Temperature	-10° a 40°C
	Altitude	Up to 1000 m above sea level. For higher altitudes, contact our sales force.
	Humidity	Air relative humidity of 5 % to 90 % non-condensing.
Standards	NBR IEC 62271-200	High voltage controlgear and switchgear - part 200: High voltage controlgear and switchgear in metal enclosure for voltages over 1 kV up to and including 52 kV
	IEC 62271-1	High-voltage switchgear and controlgear - Part 1: Common specifications
	IEC 60060-1	High-voltage test techniques. Part 1: General definitions and test requirements
	CISPR 11	Industrial, scientific and medical (ISM) radio-frequency equipament - electromagnetic disturbance characteristics - limits and methods of measurement
	IEC 61000-4-4	Electromagnetic compatibility (EMC) - Part 4: testing and measurement techniques - section 4: electrical fast transient/burst immuni-ty test. Basic EMB publication
	IEC 61000-4-18	Electromagnetic compatibility (EMC) - Part 4-18: testing and measurement techniques - damped oscillatory wave immunity test
	NBR IEC 60529	Protection rates for electric equipment enclosures (ip code)
	UL 347	Medium Voltage AC Contactors, Controllers and Control Centers
	UL 347B	Medium Voltage Motor Controllers

In-House Modifications

Motor Replate A-385
Electrical Add-Ons A-385
C-Flange Kits A-385
D-Flange Kits A-386
Drip Covers A-386
Cooling A-386
Bearings A-387
Mounting A-388
Environmental A-388

Factory Built Modifications

Bearings A-389
Cooling A-389
Degree of Protection A-389
Electrical Features A-390
Flanges A-390
Painting Plans A-390
Painting Plan Descriptions A-391
Special Shaft A-391
Terminal Box A-392
Testing A-392

Parts

C/C-DIN Flanges for Totally Enclosed Motors A-393
C Flanges for Open Motors A-395
D/F Flange Kits A-396
Drip Cover Kits A-398
W22 Terminal Box A-399
Brake Motor Parts A-401
Encoders A-403
Stub Shafts A-404
Encoder Cables A-404
Competitor C-Box to WEG W22 Frame Adapter A-405
Blower Kits A-405
Insulated Bearing Housing Endshields A-405
Terminal Block Kits A-406
Motor Sliding Bases A-406
Fans and Fan Covers A-407

Data subject to change without notice.

NEMA FRAME			48 / 56 / 140T / 180T	210T	250T	280T	320T	360T	400T	440T	L440/500	580T
IEC FRAME			63 / 71 / 80 / 90 / 100L/112	132S/M	160M/L	180M/L	200M/L	225S/M	250S/M	280S/M	315S/M	355M/L
REPLATE	**ADD CUSTOMER PART NUMBER AND / OR OTHER CHANGES SUCH AS VOLTAGE, HZ, ETC.**											
MOD. NUMBER	NAMEPLATE											
N-10	Main Nameplate Change - Stainless Steel	NET	25	25	25	25	25	25	25	25	25	25
N-20	Additional Nameplate - Stainless Steel	NET	25	25	25	25	25	25	25	25	25	25
N-25	Additional Rating/Service - Adhesive Mylar only	NET	25	25	25	25	25	25	25	25	25	25

ELECTRICAL ADD-ON'S	**INSTALLATION OF SPACE HEATERS, THERMISTORS, THERMOSTATS & EXTENDING MOTOR LEADS**											
NEMA FRAME			48 / 56 / 140T / 180T	210T	250T	280T	320T	360T	400T	440T	L440/500	580T
IEC FRAME			63 / 71 / 80 / 90 / 100L/112	132S/M	160M/L	180M/L	200M/L	225S/M	250S/M	280S/M	315S/M	355M/L
E-25	120V Space heater - XP motors	LIST	1010.00	1012.00	1103.00	1104.00	1104.00	1107.00	1197.00	1202.00	1202.00	1206.00
E-26	240V Space heater - XP motors	LIST	1010.00	1012.00	1103.00	1104.00	1104.00	1107.00	1197.00	1202.00	1202.00	1206.00
E-30	120V Space Heater	LIST	204.09	206.55	297.34	299.45	299.45	302.26	393.04	398.64	398.64	403.92
E-40	240V Space Heater (Operating on 240V)	LIST	204.09	206.55	297.34	299.45	299.45	302.26	393.04	398.64	398.64	403.92
E-50	240V Space Heater (Operating on120V)	LIST	217.32	221.23	312.01	315.36	315.36	319.83	410.61	419.55	419.55	427.93
E-55	Bearing RTDS (DE and NDE)	LIST	N/A	N/A	N/A	N/A	1446.01	1446.01	1446.01	1446.01	1446.01	1446.01
E-60	Winding RTD's 100 Ohm Platinum (One Per phase - 3 lead PT100's)	LIST	792.77	792.77	792.77	792.77	792.77	883.55	883.55	883.55	883.55	974.33
E-70	Thermistors (One per phase @155ºC)	LIST	301.54	301.54	301.54	301.54	301.54	392.32	392.32	392.32	392.32	483.10
E-80	Thermostats (One per phase @155ºC)	LIST	167.25	167.25	287.99	287.99	287.99	378.77	378.77	378.77	378.77	445.04
E-95	Provision for vibration detector (drilled and tapped)	LIST	N/A	N/A	363.13	363.13	363.13	363.13	363.13	363.13	363.13	363.13
E-99	Installation of Stubshaft Only - (Only valid for NEMA Premium® 280T & above) 5/8" stub shaft	LIST	N/A	N/A	N/A	345.00	345.00	345.00	475.00	475.00	475.00	475.00
E-100	Installation of Encoder - (Only valid for NEMA Premium® 280T & above) Dynapar HSD38 1024PPR & 5/8" stub shaft	LIST	N/A	N/A	N/A	1201.12	1201.12	1201.12	1291.90	1291.90	1291.90	1291.90
E-105	Installation of Encoder on VECTOR DUTY MOTORS (FRAMES 140- 250 - Dynapar HSD38 1024PPR with 5/8" bore)	LIST	949.02	949.02	949.02	N/A	N/A	N/A	N/A	N/A	N/A	N/A
E-110	MODIFY BRAKE RECTIFIER TO ACCEPT 460V	LIST	164.16	164.16	164.16	164.16	N/A	N/A	N/A	N/A	N/A	N/A

C-FLANGE KIT	**INSTALLATION OF C-FLANGE KITS**											
C-80	Installation of C-FLANGE (IEC)	LIST	343.13	343.13	343.13	558.83	558.83	558.83	1530.39	1530.39	1530.39	1530.39
C-90	Installation of C-FLANGE (TEFC - GEN PRP)	LIST	302.63	302.63	302.63	558.83	558.83	558.83	1530.39	1530.39	1530.39	1530.39
C-105	Installation of C-FLANGE (IEEE-841)	LIST	471.20	471.20	471.20	602.01	602.01	602.01	1530.39	1530.39	1530.39	1530.39
C-110	Installation of C-FLANGE (XP)	LIST	432.42	478.07	542.25	756.28	954.95	1005.92	1042.99	1128.38	N/A	N/A
C-120	Installation of C-FLANGE (ODP)	LIST	388.27	388.27	388.27	642.37	642.37	642.37	1222.32	1222.32	N/A	N/A

NEMA FRAME			48 / 56 / 140T / 180T	210T	250T	280T	320T	360T	400T	440T	L440/500	580T
IEC FRAME			63 / 71 / 80 / 90 / 100L/112	132S/M	160M/L	180M/L	200M/L	225S/M	250S/M	280S/M	315S/M	355M/L
D-FLANGE KIT	**INSTALLATION OF D-FLANGE KITS**											
D-120	Installation of D-FLANGE (IEC)	LIST	410.64	410.64	434.25	737.01	737.01	737.01	1105.00	1105.00	1105.00	1105.00
D-130	Installation of D-FLANGE (TEFC - GEN PRP)	LIST	416.79	416.79	416.79	743.52	743.52	743.52	1448.27	1448.27	1448.27	1448.27
D-135	Installation of D-FLANGE (IEEE-841)	LIST	N/A	429.05	429.05	743.52	743.52	743.52	1448.27	1448.27	1448.27	1448.27
D-140	Installation of D-FLANGE (XP)	LIST	484.25	484.25	484.25	905.08	905.08	905.08	1286.01	1286.01	N/A	N/A
D-150	Installation of D-FLANGE (ODP)	LIST	N/A	N/A	444.30	527.96	723.74	815.89	919.75	1160.84	N/A	N/A

DRIP COVERS	**INSTALLATION OF DRIP COVER (RAIN CAP)**											
DC-160	Drip Cover (TEFC / XP)	LIST	254.58	277.07	320.25	363.44	406.59	484.19	681.01	825.45	1058.13	1290.78
DC-170	Drip Cover (ODP)	LIST	276.50	280.53	305.03	328.70	406.01	479.48	570.26	657.97	N/A	N/A

COOLING	**ALUMINUM FAN MATERIAL CHANGE OUT AND INSTALLATION OF BLOWER KIT (FORCED VENTILATION)**											
F-180	Fan Material (ALUMINUM) Note #4	LIST	1250.55	1287.15	1287.15	1315.82	1422.28	1627.06	1717.84	1867.77	2147.10	3174.81
F-190	Forced Ventilation: Blower Cooling (w/o Encoder) (Not valid for 48 & 56 frames)	LIST	1258.63	1371.79	1439.89	1485.12	1593.32	1797.63	1797.63	2186.87	2452.77	2478.41
F-195	Forced Ventilation: Blower Cooling (w/ Encoder) (Not valid for 48 & 56 frames)	LIST	4337.60	4624.41	4782.99	4896.15	4950.84	5495.06	5955.95	6552.15	6817.40	7417.96
F-200	Cast Iron Fan Cover	List	159.50	144.80	Standard	Standard	Standard	Standard	Standard	Standard	Standard	Standard

continued on next page

Data subject to change without notice.

NEMA FRAME			48 / 56 / 140T / 180T	210T	250T	280T	320T	360T	400T	440T	L440/500	580T
IEC FRAME			63 / 71 / 80 / 90 / 100L/112	132S/M	160M/L	180M/L	200M/L	225S/M	250S/M	280S/M	315S/M	355M/L
BEARINGS	**BEARING CHANGE OUTS & SHAFT GROUNDING MODIFICATION**											
B-200	Ball to Roller Bearing Conversion Note #3 & #5	LIST	N/A	N/A	527.09	616.23	645.92	1024.27	1337.85	1812.35	1890.17	1890.17
B-210	Roller to Ball conversion Note #3 & #6	LIST	N/A	N/A	N/A	N/A	N/A	N/A	1270.28	1636.34	1636.34	1636.34
B-220	Convert to Insulated Bearing - NDE ONLY	LIST	564.72	568.44	673.10	852.65	852.65	1347.85	1347.85	1721.28	1888.88	1888.88
B-225	Convert to 2RS (sealed bearings)	LIST	210.73	221.40	277.54	312.21	346.87	835.42	1077.96	N/A	N/A	N/A
B-230	External AEGIS shaft Grounding Ring - DE ONLY	LIST	258.44	258.44	258.44	262.57	262.57	273.74	273.74	402.23	530.73	871.87
B-231	Internal AEGIS Ring for W22 w/o a Flange	LIST	N/A	N/A	582.00	590.00	610.00	782.00	893.00	1143.00	N/A	N/A
B-232	Internal AEGIS Ring for W22 with any Flange	LIST	336.00	366.00	582.00	590.00	610.00	782.00	893.00	1143.00	N/A	N/A
B-233	Internal AEGIS Ring for W22 JP/JM	LIST	N/A	N/A	582.00	590.00	610.00	782.00	893.00	1143.00	N/A	N/A
B-234	Internal AEGIS Ring for W22-IEEE 841 (All Mtg)	LIST	355.00	366.00	582.00	590.00	610.00	782.00	893.00	1143.00	N/A	N/A
B-235	Internal AEGIS Ring for ODP w/o Flange	LIST	N/A	N/A	N/A	N/A	N/A	782.00	893.00	1143.00	N/A	N/A
B-236	Internal AEGIS Ring for ODP with C-Flange	LIST	N/A	N/A	501.00	N/A	N/A	782.00	893.00	1143.00	N/A	N/A
B-237	Internal AEGIS Ring for ODP JP/JM	LIST	N/A	N/A	501.00	N/A	N/A	782.00	893.00	1143.00	N/A	N/A
B-240	Spring Loaded Grounding Brush - DE Only	LIST	205.45	205.45	205.45	214.53	214.53	214.53	234.64	321.79	321.79	321.79
B-250	Installation of Helwig Grounding Brush (Includes Brush and Brush Holder - DE only)	LIST	N/A	N/A	N/A	N/A	N/A	316.56	316.56	341.12	341.12	341.12
B-255	High Frequency Terminal Box Grounding Strap (For use with VFD driven motors)	LIST	486.00	486.00	486.00	486.00	486.00	486.00	608.00	608.00	608.00	608.00
B-260	Insulated ODE End Bell conversion (TEFC 360 frames and above - W22 only)	LIST	N/A	N/A	N/A	N/A	N/A	883.87	1177.85	1474.36	1581.09	1834.53
B-270	Low Temp Bearing Grease change out (Aeroshell 22 Low Temp Grease / -50°C to 50°C) - Requires bearings change out	LIST	N/A	N/A	370.34	474.47	509.78	946.26	1036.82	1777.46	1777.46	1830.08
B-280	High Temp Bearing Grease change out (Dow Corning 44 High Temp Grease / -20°C to 90°C) - Requires Bearing Change out	LIST	N/A	N/A	370.34	474.47	509.78	946.26	1036.82	1777.46	1777.46	1830.08

In-House Modifications

NEMA FRAME			48 / 56 / 140T / 180T	210T	250T	280T	320T	360T	400T	440T	L440/500	580T
IEC FRAME			63 / 71 / 80 / 90 / 100L/112	132S/M	160M/L	180M/L	200M/L	225S/M	250S/M	280S/M	315S/M	355M/L
MOUNTING	**TERMINAL BOX**											
M-280	F1 to F2 Mounting Conversion (Cast Iron 3 phase motors only)	LIST	136.17	136.17	181.56	181.56	181.56	181.56	272.35	272.35	272.35	272.35
M-290	Convert Footed Motor to Round Body (Cast Iron Only)	LIST	544.69	544.69	544.69	544.69	544.69	635.47	635.47	635.47	817.04	817.04
M-300	Auxiliary ternminal box (Not valid for 48 & 56 frames)	LIST	188.33	188.33	204.70	204.70	204.70	214.18	214.18	214.18	214.18	214.18
M-310	Dual Auxiliary Terminal Box Configuration (Seperating Temp. Sensors and Space heaters if specified)	LIST	N/A	N/A	N/A	N/A	N/A	352.21	352.21	352.21	352.21	352.21
M-320	Install terminal block in terminal box (Cast Iron 3 Phase only - leads not connected)	LIST	244.58	258.29	258.29	285.07	337.67	337.67	532.11	643.62	736.42	736.42

ENVIRONMENTAL	**ENVIRONMENTAL CONDITIONS**											
EV-300	Stainless Steel Breather Drains	LIST	328.21	328.21	418.99	418.99	418.99	509.78	509.78	509.78	600.56	600.56
EV-310	Stainless Steel Hardware (Only external bolts - End bell , Terminal box cover & Fan cover)	LIST	551.68	551.68	551.68	551.68	621.51	621.51	621.51	621.51	782.12	782.12
EV-320	Grounding Provisions on Frame (TEFC cast iron only)	LIST	251.40	251.40	251.40	251.40	382.68	382.68	382.68	Standard	Standard	Standard
EV-330	Tropicalization/Anti-Fungal Protection	LIST	178.07	223.46	223.46	265.36	356.15	356.15	488.83	488.83	488.83	488.83
EV-335	IP56 Modification (GEN PRP TEFC / IEC)	LIST	1031.01	1031.01	1031.01	1031.01	1031.01	1121.79	1121.79	1121.79	1121.79	1121.79
EV-340	IP56 Modification (IEEE 841)	LIST	81.00	93.00	128.00	186.00	244.00	314.00	372.00	430.00	430.00	430.00
EV-342	IP65 Modification (IEEE 841)	LIST	98.00	112.00	154.00	223.00	293.00	377.00	447.00	517.00	517.00	517.00
EV-345	IP56 Modification (XP)	LIST	98.00	112.00	154.00	223.00	293.00	377.00	447.00	517.00	517.00	517.00
EV-350	Sealant on Joints	LIST	198.32	198.32	198.32	198.32	305.87	305.87	305.87	413.41	413.41	413.41
EV-360	External Epoxy Paint (per below color chart only)	LIST	620.11	620.11	620.11	801.68	801.68	801.68	1240.22	1240.22	1240.22	1240.22
EV-380	Top Coat Paint Color Change (per below color chart only)	LIST	396.65	396.65	396.65	520.95	520.95	520.95	645.25	645.25	645.25	645.25
EV-390	FIN-FAN Modification (IEEE 841 motors only)	LIST	572.00	608.00	723.00	812.00	812.00	1110.00	N/A	N/A	N/A	N/A
EV-400	Addition of Rodent Screens (Cast iron ODP motors only)	LIST	N/A	N/A	740.00	971.00	971.00	971.00	971.00	971.00	971.00	971.00

Notes:
1. *CONSIDER TENV VECTOR DUTY MOTOR (If rating is available) = *%*
2. *NOT AVAILABLE AS MODIFICATION = N/A*
3. *CONTACT FOR QUOTE WITH LOAD DATA FOR EVALUATION*
4. *MACHINING REQUIRED*
5. *ROLLER BEARINGS SIZES NOT AVAILABLE FOR 210T FRAMES AND SMALLER*
6. *STOCK PRODUCT NOT AVAILABLE WITH ROLLER BEARINGS BELOW NEMA 400T*
7. *Pricing is subject to future updates that may alter what is reflected in printed materials.*

AVAIL TOP COAT COLORS

RAL 5009 - BLUE

MUNSELL N1 - BLACK

RAL 6002 - GREEN

RAL 7022 - DARK GRAY

RAL 9010 - WHITE

RAL 3002 - RED

Data subject to change without notice.

BEARINGS

NEMA FRAME SERIES	48	56	-	140T	180T	210T	250T	280T	320T	360T	400T	440T	L440/500	580
IEC Frame Series	-	-	63 UP 80	90	100/112	132	160	180	200	225	250	280	315	355
Ball to Roller (IV, VI, VIII P.) D.E.:	n/a	n/a	n/a	n/a	n/a	566	645	772	863	974	n/a	n/a	n/a	n/a
ZZ Bearings (Double shield-ed): Added when manufacturing	std	std	std	std	std	std	96	321	632	n/a	n/a	n/a	n/a	n/a
2 RS Bearing (D.E. and N.D.E.) Added when manufacturing	38	38	38	38	61	67	207	293	973	1364	n/a	n/a	n/a	n/a
Insulated (Hybrid) NDE Bearing	n/a	n/a	n/a	417	671	700	2163	2318	2755	n/a	n/a	n/a	n/a	n/a
Insulated Bearing Housing NDE Endshield	n/a	n/a	n/a	n/a	n/a	n/a	n/a	n/a	n/a	1064	1239	1539	1539	2265

COOLING

NEMA FRAME SERIES	48	56	-	140T	180T	210T	250T	280T	320T	360T	400T	440T	L440/500	580
IEC FRAME SERIES			63 UP 80	90	100/112	132	160	180	200	225	250	280	315	355
Fan Material : - Aluminum Added when manufacturing	n/a	n/a	n/a	64	110	118	132	151	175	218	255	298	348	n/a
Fan Material : - Cast Iron Added when manufacturing	n/a		n/a	34	50	61	79	107	112	185	185	216	300	527
Fan Material : - Bronze Added when manufacturing	n/a	n/a	n/a	238	532	865	1068	1,493	1,508	2,627	2,627	2,627	2,627	2,971
Forced Ventilation (TEBC) :	n/a	n/a	n/a	1,406	1,513	1,575	1,965	2,286	2,448	2,921	3,139	4,275	5,773	7,383
TEAO Added when manufacturing	54	54	54	54	81	94	97	176	176	370	370	380	439	520
Drip Cover Added when manufacturing	21	21	55	55	58	82	98	141	166	191	191	234	234	330
Textile Fan Cover Added when manufacturing	n/a	n/a	n/a	61	63	90	108	156	183	220	220	n/a	n/a	n/a

DEGREE OF PROTECTION

NEMA FRAME SERIES	48	56	-	140T	180T	210T	250T	280T	320T	360T	400T	440T	L440/500	580
IEC FRAME SERIES	-	-	63 UP 80	90	100/112	132	160	180	200	225	250	280	315	355
TEFC IP55 with Lip Seal	33	33	33	33	58	76	95	113	132	151	175	213	249	502
TEFC IP55 with Oil Seal	n/a	n/a	55	55	85	104	112	133	143	171	200	231	268	-
TEFC IP55 with Labyrinth seal or Nilos Ring	n/a	n/a	196	196	220	220	299	315	354	463	511	511	579	1380
TEFC IP56 w/ Oil Seals	n/a	n/a	n/a	75	118	176	267	383	498	441	655	1724	2041	-
TEFC IP56 w/ W3Seals (labyrinth)	n/a	n/a	n/a	230	277	401	501	643	861	825	1023	2143	2674	3815
TEFC IP65 w/ Oil Seals	n/a	n/a	n/a	75	118	176	267	383	498	441	655	1724	2041	-
TEFC IP65 w/ Taconite (labyrinth) Seals	n/a	n/a	n/a	167	205	303	398	528	709	659	857	1954	2394	3366
TEFC IP65 w/ W3seals (labyrinth)	n/a	n/a	n/a	230	277	401	501	643	861	825	1023	2143	2674	3815
TEFC IP66 w/ W3seals (labyrinth)	n/a	n/a	n/a	273	344	496	662	853	1112	1185	1515	3310	4009	5687

ELECTRICAL SPECIAL FEATURES - Added when manufacturing

NEMA FRAME SERIES	48	56	-	140T	180T	210T	250T	280T	320T	360T	400T	440T	L440/500	580
IEC FRAME SERIES	-	-	63 UP 80	90	100/112	132	160	180	200	225	250	280	315	355
Thermistors (1/phase) PTC:	n/a	n/a	142	142	142	142	142	142	142	142	142	142	142	142
Thermostats (1/phase) NC:	n/a	n/a	142	142	142	142	142	142	142	142	142	142	142	142
Bearing RTD's PT100 (1/bearing)	n/a	n/a	n/a	n/a	n/a	n/a	1215	1215	1215	1215	1215	1215	1215	1215
Winding RTD's PT100 (1/phase):	n/a	n/a	1052	1052	1052	1052	1052	1052	1052	1052	1052	1052	1052	1052
Space Heater	n/a	n/a	37	37	37	37	54	54	54	109	109	109	109	217
Class of Insulation : -"F"	Add 5% to motor list price								Add 3% to motor list price					
Class of Insulation : -"H"	Add 10% to motor price													
Epoxy varnish impregnation Enclosed motors only	Add 5% to motor price													
Above 600 V (1000 Max.)	Add 10% to motor price													

FLANGES

NEMA FRAME SERIES		48	56		140T	180T	210T	250T	280T	320T	360T	400T	440T	L440/ 500	580
IEC FRAMES SERIES				63 UP 80	90	100/112	132	160	180	200	225	250	280	315	355
FLANGE TYPE	Enclosure	List Price													
"C" Flange	TEFC	28	28	28	28	38	51	68	99	121	442	491	606	716	1,623
	ODP	28	28	-	34	38	51	68	85	100	394	446	560	-	-
	Explosion Proof	-	-	61	61	70	76	103	147	182	665	736	1,384	1,384	-
"D" Flange	TEFC	-	-	50	59	70	79	117	136	192	637	762	915	1,051	1,863
	ODP	-	-	-	-	-	-	107	126	170	537	685	855	-	-
	Explosion Proof	-	-	-	89	89	103	130	189	246	736	1,067	1,311	1,577	2,364

PAINTING PLANS Factory Build Adder

NEMA FRAME SERIES		140T	180T	210T	250T	280T	320T	360T	400T	440T	L440/500	580
IEC FRAMES SERIES	63 UP 80	90	100/ 112	132	160	180	200	225	250	280	315	355
Painting Plan	List Price											
202	45	58	94	120	196	228	246	308	335	402	447	745
203	58	85	138	188	290	344	384	509	553	696	808	1,269
211	106	114	133	228	467	547	597	775	828	1,003	1,075	1,113
212	122	133	171	277	585	692	779	1,026	1,121	1,410	1,577	1,661
Internal Epoxy Painting	45	58	94	120	196	228	246	308	335	402	447	745

Data subject to change without notice.

Painting Plan Description

Painting Plan	Recommended Uses	Surface Preparation Grade	PRIMER		INTERMEDIATE		FINISH COAT		ADHERENCE GRADE ASTM
			Paint	Film Thickness (μm)	Paint	Film Thickness (μm)	Paint	Film Thickness (μm)	D-3359
201A	Non aggressive environments; Not recommended for direct exposure to solvents, alkalis and acid vapors	Sa 2 ½	Synthetic alkyd	20 – 55	-	-	Synthetic alkyd enamel	40 – 60	3B to 5B
202E	Aggressive sheltered industrial environments; Chemical, pulps and paper industries, resistant to acid steams, alkalis and solvents vapors	Sa 2 ½	Synthetic alkyd	20 - 55	Epoxy Isocyanate	20 - 30	Epoxy polyamide enamel	100 – 140	3A to 5A
202P	Aggressive sheltered or non-sheltered industrial environments; Chemical, mining, pulp and paper industries, resistant to acid steams, alkalis and solvents vapors; Indicated to food processing motors – USA and Europe	Sa 2 ½	Synthetic alkyd	20 - 55	Epoxy Isocyanate	20 - 30	1 coats Aliphatic polyurethane enamel	60 - 100	3A to 5A
203A	Environments low aggressiveness; Not recommended for direct exposure to solvents, alkalis and acid vapors	Sa 2 ½	Synthetic alkyd	20 – 55	Synthetic powdered alkyd	30 a 45	Synthetic alkyd enamel	30 – 45	3B to 5B
211E	Painting of equipment, structures in general subject to moderate and high aggressive level such as: pulp and paper plants, steel and iron and chemical industries	Sa 2 ½	Polyamide Epoxy	90 - 130	-	-	Polyamide Epoxy	90 - 130	3A to 5A
211P	Painting of equipment, structures in general subject to moderate and high aggressive level such as: pulp and paper plants, steel and iron and chemical industries	Sa 2 ½	Polyamide Epoxy	90 - 130	-	-	Aliphatic polyurethane enamel	65 – 90	3A to 5A
212E	Non sheltered marine environment; Resistant to acid, alkalis and solvent spills	Sa 2 ½	Zinc ethyl silicate	70 - 90	Epoxy polyamide	90 – 130	Polyamide Epoxy	90 – 130	3A to 5A
212P	Non sheltered marine environment; Resistant to acid, alkalis and solvent spills	Sa 2 ½	Zinc ethyl silicate	70 - 90	Epoxy polyamide	90 – 130	Aliphatic polyurethane enamel	65 – 90	3A to 5A

Special Shaft

NEMA FRAME SERIES	48	56		140T	180T	210T	250T	280T	320T	360T	400T	440T	500	580
IEC FRAMES SERIES			63 UP 80	90	100/112	132	160	180	200	225	250	280	315	355
Second Shaft End (standard dimension)	n/a	n/a	60	72	87	101	104	189	189	392	396	407	752	879
Threaded center hole in the shaft end	n/a	n/a	33	33	41	51	85	136	155	std	std	std		
420 Stainless steel shaft end	Add 10% to motor list price													
315 Stainless steel shaft end	Add 15% to motor list price													
Special Shaft														
Special Shaft Diameter (Type "A" mod)	n/a	n/a	58	58	87	130	151	189	209	392	396	407	752	879
Special Shaft Length (Type "B" mod)	n/a	n/a	63	63	96	113	120	208	216	446	450	473	821	987
Special Shaft Diameter & Length (Type "C" mod)	n/a	n/a	72	72	125	141	158	249	262	574	579	628	965	1117
Special Shaft Diameter, Length & Tapered (Type "D" mod)	n/a	n/a	79	79	130	156	174	271	288	646	654	716	1023	1254
Balance - Reduced	n/a	n/a	n/a	33	79	91	100	125	134	156	167	188	507	616
Balance - Special	n/a	n/a	n/a	58	87	133	159	180	217	250	283	317	846	1044

Terminal Box*

NEMA FRAME SERIES	48	56		140T	180T	210T	250T	280T	320T	360T	400T	440T	L440/ 500	580
IEC FRAMES SERIES			**63 UP 80**	**90**	**100/112**	**132**	**160**	**180**	**200**	**225**	**250**	**280**	**315**	**355**
Cable Gland - Plastic	n/a	n/a	10	10	14	14	22	22	22					
Cable Gland - Brass	n/a	n/a	33	33	50	50	182	182	182	567	567	567	567	714
Threaded Plug	n/a	n/a	6	6	9	9	18	18	18	22	22	22	22	44
Terminal Block (6 pin):	n/a	n/a	9	9	14	23	23	41	41	197	197	380	380	753
Additional terminal box	n/a	n/a	n/a	30	30	41	41	41	41	59	59	59	70	118
Without Terminal Box	n/a	n/a	18	18	22	22	33	33	33	45	45	47	58	70

* Not valid for Hazardous Location Motors

Testing:

NEMA FRAME SERIES	48	56		140T	180T	210T	250T	280T	320T	360T	400T	440T	L440/ 500	380
IEC FRAMES SERIES			**63 UP 80**	**90**	**100/112**	**132**	**160**	**180**	**200**	**225**	**250**	**280**	**315**	**355**
Routine Test - Unwitnessed			381	381	381	513	513	513	513	622	622	718	877	877
Routine Test - Witnessed			1215	1215	1215	1427	1427	1427	1427	1683	1683	1903	2368	2368
Type Test - Unwitnessed			586	586	586	769	769	769	769	952	952	1208	1768	1768
Type Test - Witnessed			1419	1419	1419	1632	1632	1632	1632	1939	1939	2195	2318	2318
Vibration Test			183	183	183	205	205	205	205	285	285	403	559	559
Noise Level Test			213	213	213	242	242	242	242	322	322	462	638	638

Test Description:

Routine Test

– Winding resistance check (at cold)
– Locked Rotor test (torque, current and absorbed power)
– No-load test (current and absorbed power)
– Hi-pot
– Insulation resistance
– Accessories check for continuity (if applicable)

Type Test

– Winding resistance check (at cold)
– Locked Rotor test (torque, current and absorbed power)
– Load test, including temperature rise with constant output power at full load)
– Breakdown Torque test
– No-load test (current and absorbed power)
– Vibration test on motors 364/5T and above
– Hi-pot
– Insulation resistance
– Accessories check for continuity (if applicable)

Vibration Test

– Vibration measure on as many as 6 points, depending on the mechanical envelope of the motor allowing access to all the reading points
– Test performed with half key on the shaft
– Performed with motor on an elastic mounting base (rigid base when requested)

Noise Test

– Performed at no load on an acoustic chamber
– Measurements at 1m (~ 3.3ft) distance from the motor
– Readings:
- Total sound pressure level of the motor at 4 points, in dB(A)
- Bearings sound pressure level in dB(A)
- Frequency spectrum of the global noise for the point with the most intense reading, at 50% and 100% of rated voltage
- Frequency spectrum of the bearings noise for the point with the most intense global reading, at 50% and 100% of rated voltage

Data subject to change without notice.

C/C-DIN FLANGES FOR TOTALLY ENCLOSED MOTORS

PARTS

Nema Frames - Cast Iron - TEFC - W22

Frame	Flange Size	Bearing Size	C-Flange Kit	
			Catalog Number	List Price
143/5	FC-149	205	FLC-E140-UBC	$85
182/4	FC-184	207	FLC-E180-UBC-W22	$145
213/5	FC-184	308	FLC-E210-UBC	$150
254/6	FC-184	309	FLC-E250-W22	$195
284/6	FC-228	311	FLC-E280	$290
324/5	FC-279	312	FLC-E320	$440
364/5	FC-279	314	FLC-E360-314-W22	$575
404/5	FC-279	314	FLC-E400-314	$620
	FC-279	316	FLC-E400-316	$620
444/5 445/7 447/9	FC-355	314	FLC-E440-314	$830
	FC-355	319	FLC-E440-319	$830
	FC-355	322	FLC-E440-322	$830
L447/9	FC-355	314	FLC-EL440-314-W22	$1,200
	FC-355	322	FLC-EL440-322-W22	$1,200
504/5	FC-368	314	FLC-E500-314-W22	$1,200
	FC-368	319	FLC-E500-319-W22	$1,200
	FC-368	322	FLC-E500-322-W22	$1,200
586/7	FC-368	314	FLC-E580-314	$1,650
	FC-368	322	FLC-E580-322	$1,650
	FC-368	324	FLC-E580-324	$1,650

NEMA Frames - IEEE 841 - W22

Frame	Flange Size	Bearing Size	C-Flange Kit	
			Catalog Number	List Price
143/5	FC-149	205	FLC-IE140	$250
182/4	FC-184	207	FLC-IE180-W22	$285
213/5	FC-184	308	FLC-IE210	$300
254/6	FC-184	309	FLC-IE250-W22	$325
284/6	FC-228	311	FLC-IE280	$365
324/5	FC-279	312	FLC-IE320	$550
364/5	FC-279	314	FLC-E360-314-W22	$575
404/5	FC-279	314	FLC-E400-314	$620
	FC-279	316	FLC-E400-316	$620
444/5 445/7 447/9	FC-355	314	FLC-E440-314	$830
	FC-355	319	FLC-E440-319	$830
	FC-355	322	FLC-E440-322	$830
L447/9	FC-355	314	FLC-EL440-314-W22	$1,200
	FC-355	322	FLC-EL440-322-W22	$1,200
504/5	FC-368	314	FLC-E500-314-W22	$1,200
	FC-368	319	FLC-E500-319-W22	$1,200
	FC-368	322	FLC-E500-322-W22	$1,200
586/7	FC-368	314	FLC-E580-314	$1,650
	FC-368	322	FLC-E580-322	$1,650
	FC-368	324	FLC-E580-324	$1,650

NEMA Frames - New Rolled Steel Motors (-S Models) - TEFC

Frame	Flange Size	Bearing Size	C-Flange Kit	
			Catalog Number	List Price
143/5	FC-149	205	FLC-E140-S	$85
182/4	FC-184	206	FLC-E180-S	$145
213/5	FC-184	208	FLC-E210-S	$150
254/6	FC-184	309	FLC-E250-S	$195

NEMA Frames - Rolled Steel Motors - TEFC (RS Models)

Frame	Flange Size	Bearing Size	C-Flange Kit	
			Catalog Number	List Price
143/5	FC-149	205	FLC-ERS140-UBC*	$85
182/4	FC-184	206	FLC-ERS180-UBC	$145
W182/4	FC-184	206	FLC-ERSW180-UBC	$145
213/5	FC-184	208	FLC-ERS210-UBC	$150
254/6	FC-184	309	FLC-RS250	$195
W254/6	FC-184	309	FLC-RSW250	$195

** Model not good for motor mod. Replacement only.*

C/C-DIN FLANGES FOR TOTALLY ENCLOSED MOTORS

NEMA Frames - Explosion Proof Motors - modifications must be performed by a UL Certified Service Center

Frame	Flange Size	Bearing Size	C-Flange Kit	
			Catalog Number	List Price
143/5	FC-149	205	FLC-X140	$120
182/4	FC-184	307	FLC-X180	$201
213/5	FC-184	308	FLC-X210	$214
254/6	FC-184	309	FLC-X250	$291
284/6	FC-228	311	FLC-X280	$517
324/5	FC-279	312	FLC-X320	$663
364/5	FC-279	314	FLC-X360-314	$992
404/5	FC-279	314	FLC-X360-314	$992
	FC-279	217	FLC-X400-217	$1,210
444/5 445/7 447/9	FC-355	314	FLC-X440-314	$1,508
	FC-355	219	FLC-X440-219	$1,508
	FC-355	319	FLC-X440-319	$1,508

Metric (IEC) Frames - General Purpose - TEFC

Frame	Flange Size	Bearing Size	C-DIN Flange Kit	
			Catalog Number	List Price
63	C-90	201	FLC-IM63DIN-AL	$39
71	C-105	202	FLC-IM71DIN-BC-W22	$43
	C-105	203	FLC-IM71DIN-AL-BC	$43
80	C-120	204	FLC-IM80DIN-AL-BC	$45
90	C-140	205	FLC-IM90DIN-AL-UBC	$85
100	C-160	206	FLC-IM100DIN-AL-UBC	$128
112	C-160	207	FLC-IM112DIN-UBC-W22	$145
	C-160	307	FLC-IM112DIN-AL-UBC	$145
132	C-200	308	FLC-IM132DIN-AL-UBC	$150
160	C-250	309	FLC-IM160DIN-W22	$195

Metric (IEC) Frames - Cast Iron - General Purpose - TEFC

Frame	Flange Size	Bearing Size	NEMA C-Flange Kit	
			Catalog Number	List Price
160	FC-184	309	FLC-IM160-W22	$195
180	FC-228	311	FLC-IM180	$290
200	FC-228	312	FLC-IM200	$440
225	FC-279	314	FLC-E360-314-W22	$575
250	FC-279	314	FLC-E400-314	$620
280	FC-355	314	FLC-E440-314	$830
	FC-355	316	FLC-IM280-316	$830
315	FC-368	314	FLC-E500-314-W22	$1,030
	FC-368	319	FLC-E500-319-W22	$1,030
355	FC-368	316	FLC-E580-316	$1,650
	FC-368	322	FLC-E580-322	$1,650

Fractional Motors - TEFC

Frame	Flange Size	Bearing Size	C-Flange Kit	
			Catalog Number	List Price
A56 B56 D56 E56 F56 G56 F143/5 G143/5	FC-149	203	FLC-E56-203-FC149	$85
	FC-149	204	FLC-E56-204-FC149	$85
	FC-149	205	FLC-ERS140-UBC	$85

Fractional Motors - New Rolled Steel (-S MODELS) - TEFC

Frame	Flange Size	Bearing Size	C-Flange Kit	
			Catalog Number	List Price
48 W56	FC-149	203	FLC-E48/W56-S	$80
56 56H	FC-149	203	FLC-E56-203-FC149-S	$85
	FC-149	204	FLC-E56-204-S	$85
	FC-149	205	FLC-E140-S	$85

Data subject to change without notice.

C FLANGES FOR OPEN MOTORS

NEMA Frames - New Rolled Steel (-S Models) - ODP

Frame	Flange Size	Bearing Size	C-Flange Kit	
			Catalog Number	List Price
143/5	FC-149	205	FLC-0140-S	$85
182/4	FC-184	206	FLC-0180-S	$145
213/5	FC-184	208	FLC-0210-S	$150
254/6	FC-184	309	FLC-0250-S	$195

NEMA Frames - ODP

Frame	Flange Size	Bearing Size	C-Flange Kit	
			Catalog Number	List Price
143/5*	FC-149	205	FLC-0140-UBC	$85
182/4*	FC-184	206	FLC-0180-UBC	$145
213/5*	FC-184	208	FLC-0210-UBC	$150
254/6	FC-184	309	FLC-0250	$195
284/6	FC-228	311	FLC-0280	$290
324/6	FC-279	312	FLC-0320	$440
364/5	FC-279	314	FLC-0360-314	$575
404/5	FC-279	314	FLC-0360-314	$575
	FC-279	316	FLC-0400-316	$620
444/5	FC-355	314	FLC-0440-314	$830
	FC-355	319	FLC-0440-319	$830
447/9	FC-355	314	FLC-0440-314-W40	$2,457
	FC-355	319	FLC-0440-319-W40	$2,457

**Legacy Models*

Fractional Motors - New Rolled Steel (-S Models) - ODP

Frame	Flange Size	Bearing Size	C-Flange Kit	
			Catalog Number	List Price
48 W56	FC-149	203	FLC-048/W56-S	$67
56 56H	FC-149	203	FLC-056-203-FC149-S	$85
	FC-149	204	FLC-056-204-S	$85
	FC-149	205	FLC-0140-S	$85

Fractional Motors - ODP - (RS Models)

Frame	Flange Size	Bearing Size	C-Flange Kit	
			Catalog Number	List Price
48 56	FC-95	203	FLC-048-203-FC95	$85
	FC-149	203	FLC-048-203-FC149	$85
A56 B56 D56 E56 F56 G56	FC-149	204	FLC-056-204-FC149	$85

D/F FLANGE KITS

NEMA Frames - Cast Iron - TEFC - W22

Frame	Flange Size	Bearing Size	D-Flange Kit	
			Catalog Number	List Price
143/5	FD-254	205	FLD-E140-UBC	$98
182/4	FD-254	207	FLD-E180-W22	$171
213/5	FD-254	308	FLD-E210-UBC	$184
254/6	FD-317	309	FLD-E250-W22	$244
284/6	FD-317	311	FLD-E280	$318
324/5	FD-406	312	FLD-E320	$465
364/5	FD-406	314	FLD-E360-314-W22	$620
404/5	FD-508	314	FLD-E400-314	$765
	FD-508	316	FLD-E400-316	$765
444/5 445/7 447/9	FD-508	314	FLD-E440-314	$932
	FD-508	319	FLD-E440-319	$932
	FD-508	322	FLD-E440-322	$932
L447/9	FD-508	314	FLD-EL440-314-W22	$1,350
	FD-508	322	FLD-EL440-322-W22	$1,350
504/5	FD-558	314	FLD-E500-314-W22	$1,350
	FD-558	319	FLD-E500-319-W22	$1,350
	FD-558	322	FLD-E500-322-W22	$1,350
586/7	FD-762	314	FLD-E580-314	$2,130
	FD-762	322	FLD-E580-322	$2,130
	FD-762	324	FLD-E580-324	$2,130

NEMA Frames - IEEE 841

Frame	Flange Size	Bearing Size	D-Flange Kit	
			Catalog Number	List Price
213/5	FD-254	308	FLD-IE210	$350
254/6	FD-317	309	FLD-IE250-W22	$425
284/6	FD-317	311	FLD-IE280	$490
324/5	FD-406	312	FLD-IE320	$785
364/5	FD-406	314	FLD-E360-314-W22	$620
404/5	FD-508	314	FLD-E400-314	$765
	FD-508	316	FLD-E400-316	$765
444/5 445/7 447/9	FD-508	314	FLD-E440-314	$932
	FD-508	319	FLD-E440-319	$932
	FD-508	322	FLD-E440-322	$932
L447/9	FD-508	314	FLD-EL440-314-W22	$1,030
	FD-508	322	FLD-EL440-322-W22	$1,030
504/5	FD-558	314	FLD-E500-314-W22	$1,030
	FD-558	319	FLD-E500-319-W22	$1,030
	FD-558	322	FLD-E500-322-W22	$1,030
586/7	FD-762	314	FLD-E580-314	$2,604
	FD-762	322	FLD-E580-322	$2,604
	FD-762	324	FLD-E580-324	$2,604

Data subject to change without notice.

D/F FLANGE KITS, *continued*

NEMA Frames - Explosion Proof Motors - modifications must be performed by a UL Certified Service Center

Frame	Flange Size	Bearing Size	D-Flange Kit	
			Catalog Number	List Price
143/5	FD-254	205	FLD-X140	$154
182/4	FD-254	307	FLD-X180	$210
213/5	FD-254	308	FLD-X210	$291
254/6	FD-317	309	FLD-X250	$534
284/6	FD-317	311	FLD-X280	$637
324/5	FD-406	312	FLD-X320	$795
364/5	FD-406	314	FLD-X360-314	$1,141
404/5	FD-508	314	FLD-X400-314	$1,338
	FD-508	217	FLD-X400-217	$1,338
444/5 445/7 447/9	FD-508	314	FLD-X440-314	$1,878
	FD-508	219	FLD-X440-219	$1,878
	FD-508	319	FLD-X440-319	$1,878

Metric (IEC) Frames - Cast Iron - TEFC

Frame	Flange Size	Bearing Size	FF-Flange Kit	
			Catalog Number	List Price
63	FF-115	201	FLF-IM63-AL	$63
71	FF-130	202	FLF-IM71-BC-W22	$72
	FF-130	203	FLF-IM71-AL-BC	$72
80	FF-165	204	FLF-IM80-AL-BC	$96
90	FF-165	205	FLF-IM90-AL-UBC	$98
100	FF-215	206	FLF-IM100-AL-UBC	$169
112	FF-215	207	FLF-IM112-UBC-W22	$171
	FF-215	307	FLF-IM112-AL-UBC	$171
132	FF-265	308	FLF-IM132-AL-UBC	$184
160	FF-300	309	FLF-IM160-W22	$245
180	FF-300	311	FLF-IM180	$318
200	FF-350	312	FLF-IM200	$465
225	FF-400	314	FLF-IM225-W22	$620
250	FF-500	314	FLF-IM250	$765
280	FF-500	314	FLF-IM280-314	$932
	FF-500	316	FLF-IM280-316	$932
315	FF-600	314	FLF-IM315-314-W22	$1,350
	FF-600	319	FLF-IM315-319-W22	$1,350

D FLANGES FOR OPEN MOTORS

NEMA Frames - ODP

Frame	Flange Size	Bearing Size	D-Flange Kit	
			Catalog Number	List Price
143/5	FD-254	205	-	-
182/4	FD-254	206	-	-
213/5	FD-254	208	-	-
284/6	FD-317	311	FLD-0280	$318
324/6	FD-406	312	FLD-0320	$465
364/5	FD-406	314	FLD-0360-314	$620
404/5	FD-406	314	FLD-0360-314	$620
	FD-508	314	FLD-0400-314	$765
	FD-508	316	FLD-0400-316	$765
444/5	FD-508	314	FLD-0440-314	$932
	FD-508	319	FLD-0440-319	$932
447/9	FD-508	314	FLD-0440-314-W40	$3,900

** Only valid for Cast Iron frame*

Drip Cover Kits for TEFC Motors

	Frame	W22	Rolled Steel (-S)	W21 (RS Motors)	Rolled Steel (RS Motors)	List Price
NEMA	48 W56	-	DRCV-E48/W56-S	-	-	45
	A56 B56 D56 E56 F56 G56 F143/5 G143/5c	-	DRCV-0140-S	-	DRCV-E56	53
	140T	DRCV-E140	-	DRCV-E140	-	$89
		-	DRCV-0140-S	-	DRCV-E56	$53
	180T	DRCV-E180	DRCV-E180-S	DRCV-E180	DRCV-E180	$128
	210T	DRCV-E210	DRCV-E210-S	DRCV-E210	DRCV-E210	$136
	250T	DRCV-E250-W22	DRCV-E250-S	DRCV-E250	not available	$167
	280T	DRCV-E280-W22	-	DRCV-E280	-	$220
	320T	DRCV-E320-W22	-	DRCV-E320	-	$344
	360T	DRCV-E360-W22	-	DRCV-E360/400	-	$393
	400T	-	-	DRCV-E360/400	-	$393
		DRCV-E400-W22	-	-	-	$479
	440T	DRCV-E440-W22	-	DRCV-E440/500	-	$819
	500	-	-	DRCV-E440/500	-	$819
		DRCV-EL440-W22	-	-	-	$952
	L440T	DRCV-EL440-W22	-	-	-	$952
	580	DRCV-E580-W22	-	DRCV-E580	-	$1,145
METRIC	90	DRCV-E140	-	DRCV-E140	-	$89
	100	DRCV-E100	-	DRCV-E100	-	$89
	112	DRCV-E180	-	DRCV-E180	-	$95
	132	DRCV-E210	-	DRCV-E210	-	$131
	160	DRCV-E250-W22	-	DRCV-E250	-	$152
	180	DRCV-E280-W22	-	DRCV-E280	-	$220
	200	DRCV-E320-W22	-	DRCV-E320	-	$344
	225	DRCV-E360-W22	-	DRCV-E360/400	-	$393
	250	-	-	DRCV-E360/400	-	$393
		DRCV-E400-W22	-	-	-	$479
	280	DRCV-E440-W22	-	DRCV-E440/500	-	$819
	315	-	-	DRCV-E440/500	-	$819
		DRCV-EL440-W22	-	-	-	$952
	355	DRCV-E580-W22	-	DRCV-E580	-	$1,145

Drip Cover Kits for ODP Motors

Frame	Catalog Number	List Price	Rolled Steel (-S) Model	List Price
48 W56	-	-	DRCV-E48/W56-S	$45
C56 56 A56 B56 D56 E56 F56 G56	DRCV-0S48/56	$23	DRCV-056-S	$45
140T	DRCV-0DP140	$105	DRCV-0140-S	$53
180T	DRCV-0DP180	$120	DRCV-0180-S	$128
210T	DRCV-0DP210	$131	DRCV-0210-S	$136
250T	DRCV-0DP250	$152	DRCV-0250-S	$167
280T	DRCV-0DP280	$220	-	-
320T	DRCV-0DP320	$366	-	-
360T	DRCV-0DP360/400	$410	-	-
400T	DRCV-0DP360/400	$410	-	-
440T	DRCV-0DP440	$613	-	-

Data subject to change without notice.

W22 Terminal Box - American Standard NPT

IEC Frame Size	NEMA Frame Size	Holes	Part Number	List Price
90 100	143/5	NPT 3/4"	TBX-E140-W22	$71
112 132	182/4 213/5	NPT 1"	TBX-E180/210-W22	$99
160 180	254/6 284/6	NPT 1 1/2"	TBX-E250/280-W22	$144
200	324/6	NPT 2"	TBX-E320-W22	$214
225 250	364/5 404/5	NPT 3"	TBX-E360/400-3-W22	$324
280	444/5	2 x NPT 3"	TBX-E440-3-W22	$497
315S/M	445/7 447/9 504/5	2 x NPT 3"	TBX-E447/505-3-W22	$768
315L 355M/L	L447/9 586/7	For cable Plate	TBX-EL447/9-586/7-W2	$1,686
355A/B	588/9	-	Contact Parts	-

Two Accessory terminal boxes attached to power lead terminal box.

Auxiliary Terminal Boxes

For W22 only
Auxiliary Terminal Boxes are designed to be installed on the left side of the Main Terminal Box.

Frame	Auxiliary T-Box Model	List Price
140T	AUXTBOXF1W22-A	$135
180T		
210T		
250T	AUXTBOXF1W22-B	$171
280T		
320T		
360T	AUXTBOXF1W22-C AUXTBOXF2W22-C	$270
400T		
440T		
L440T		
500		
580		

F1 and F2 on model number identifies the appropriate use for the auxiliary t-box.

If separated Auxiliary Terminal boxes are required for Thermal Sensors and Space Heaters, frames 360T and above offers a second Auxilary Terminal Box just for the Space Heater. The Second Auxiliary Terminal Box for Space Heater is designed to be installed on the right side of the Main Terminal Box.

Frame	2nd Auxiliary T-Box Model	List Price
360T	AUXTBOXF1W22-D	$270
400T		
440T		
L440T		
500		
580		

W22 Terminal Box Adaptor

IEC Frame Size	NEMA Frame Size	Part Number	List Price
225 250	364/5, 404/5	TBX-ADPT-360/400- W22	$660
280	444/5	TBX-ADPT-444/5-W22	$777
315S/M	445/7, 447/9, 504/5	TBX-ADPT-444/500- W22	$921
315L	L447/9	TBX-ADPT-L440-W22	$1,080
355	586/7 588/9	TBX-ADPT-580-W22	$1,273

Rolled Steel (-S) Terminal Boxes

NEMA Frame Size	Thread size	Part Number	List
48 W56	NPT 1/2”	TBX-E48/W56	$40
56 56H	NPT 1/2”	TBX-E56-S	$40
143/5	NPT 3/4”	TBX-E140-S	$62
182/4	NPT 3/4”	TBX-E180-S	$73
213/5	NPT 1”	TBX-E210-S	$108
254/6	NPT 1 1/4”	TBX-E250-S	$154

Data subject to change without notice.

W22 Brake Motor Kit

Kit composition: Stator brake, Seal, Cube, Retaining ring, Key and Rotor brake.

FRAME	SIZE	Nominal Braking torque	205 Vcc	
			Part Number	List Price
143/5	10	16 Nm	BRAKE-E140-W22	$588
182/4	14	60 Nm	BRAKE-E180-W22	$972
213/5	16	80 Nm	BRAKE-E210-W22	$1,410
254/6	18	150 Nm	BRAKE-E250-W22	$1,985
284/6	20	260 Nm	BRAKE-E280-W22	$3,454
324/5	25	400 Nm	BRAKE-E320-W22	$5,453

Braking Disk for W22 Brake Motor

Kit composition: Disc, Cub, Key and Retaining Ring.

FRAME	Part Number	List Price
143/5	BDK-BM140-W22	$422
182/4	BDK-BM180-W22	$643
213/5	BDK-BM210-W22	$770
254/6	BDK-BM250-W22	$934
284/6	BDK-BM280-W22	$1,610
324/5	BDK-BM320-W22	$2,814

Fan Cover for W22 Brake Motor

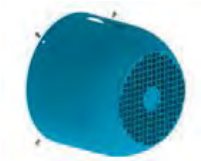

Kit composition: Fancover and Fixing bolts.

FRAME	Part Number	List Price
143/5	FCO-BM140-W22	$185
182/4	FCO-BM180-W22	$222
213/5	FCO-BM210-W22	$222
254/6	FCO-BM250-W22	$406
284/6	FCO-BM280-W22	$406
324/5	FCO-BM320-W22	$611

Brake Handle for W22 Brake Motor

Kit composition: Bridge Rectifier and Bolts

Brake Lever - W22 Manual Unlock		
FRAME	Part Number	List Price
143/5	BRKHDL-BM140-W22	$78
182/4	BRKHDL-BM180-W22	$127
213/5	BRKHDL-BM210-W22	$179
254/6	BRKHDL-BM250-W22	$236
284/6	BRKHDL-BM280-W22	$453
324/5	BRKHDL-BM320-W22	$602

Rectifier for W22 Brake Motor

Kit composition: Terminal box, Fixing bolts, Rubber gaskets, Terminal box cover, Cover fixing bolts.

BRAKE RECTIFIER			
Type	VOLTAGE	Part Number	List Price
BRIDGE RECTIFIER	220V	REC-BM220V	$148
HALF BRIDGE RECTIFIER	360V	REC-BM440V	
	440V		
	575V	REC-BM575V	

Terminal Box for W22 Brake Motor

Kit composition: Fancover and Fixing bolts.

IEC Frame Size	NEMA Frame Size	H	Part Number	List Price
90 - 100	143/5	NPT	TBX-BM140-W22	$135
112 - 132	182/4 - 213/5	NP	TBX-BM180/210-W22	$177
160 - 180	254/6 - 284/6	NPT 1 1/2"	TBX-BM250/280-W22	$191
200	324/6	NPT 2"	TBX-BM320-W22	$238

** Stocked terminal boxes are RAL5009 Blue*

Data subject to change without notice.

Encoders

Motor requires Stub-shaft for installation of the encoder (exception to the TENV Vector Duty motors - page A-355)

WEG Catalog Number	MFG Catalog Number	MFG	Specification	List Price
ECHSD38-D	HSD38102484370	Dynapar	PPR:1024/ Bore size: 5/8"/ Format: Differential Bi-Directional A/Anot,B/Bnot,Z/Znot/ Output: 5-26Vin, 5-26V differential line driver out (7272 chip set)/ Termination:10 pin MS connector/ Housing: aluminum, slotted tether with cover kit (basket). Optical	$1,418
ECHS25A-A	HS25AY1CCE0DA000	Avtron	PPR:1024/ Bore size: 5/8"/ Format: Differential Bi-Directional A/Anot,B/Bnot,Z/Znot/ Output: 5-28Vin, 5-28V differential line driver out (7272 chipset)/ Termination:10 pin MS connector/ Housing: aluminum, slotted tether. Optical	$1,423
ECHS35R-D	HS35R10248277	Dynapar	PPR:1024/ Bore size: 5/8"/ Format: Differential Bi-Directional A/Anot,B/Bnot,Z/Znot/ Output: 5-26Vin, 5-26V differential line driver out (7272 chip set)/ Termination:10 pin MS connector/ Housing: aluminum, slotted tether. Optical	$1,418
ECHS35A-A	HS35AY1CCU0DA000	Avtron	PPR:1024/ Bore size: 5/8"/ Format: Differential Bi-Directional A/Anot,B/Bnot,Z/Znot/ Output: 5-28Vin, 5-28V differential line driver out (7272 chipset)/ Termination:10 pin MS connector/ Housing: aluminum, slotted tether. Optical	$1,590
ECHS35M-A	HS35MYX6CCU0DA00	Avtron	PPR:1024/ Bore size: 5/8"/ Format: Differential Bi-Directional A/Anot,B/Bnot,Z/Znot/ Output: 5-24Vin, 5-24V differential line driver out (7272 chipset)/ Termination:10 pin connector/ Housing: aluminum, slotted tether. Magnetic	$2,150

Different encoders may be available upon inquiry

Encoders TEBC Motors

Motor Frame	WEG Catalog Number	MFG Catalog Number	MFG	Specification	List Price
140T 180T	ECHSD38-D	HSD38102484370	Dynapar	PPR:1024/ Bore size: 5/8"/ Format: Differential Bi-Directional A/Anot,B/Bnot,Z/Znot/ Output: 5-26Vin, 5-26V differential line driver out (7272 chip set)/ Termination:10 pin MS connector/ Housing: aluminum, slotted tether with cover kit (basket). Optical	$1,418
	ECHS35R-D	HS35R10248377	Dynapar	PPR:1024/ Bore size: 5/8"/ Format: Differential Bi-Directional A/Anot,B/Bnot,Z/Znot/ Output: 5-26Vin, 5-26V differential line driver out (7272 chip set)/ Termination:10 pin MS connector/ Housing: aluminum, slotted tether. Optical	$1,418
210T 250T 280T 320T	ECHS35RTEBC-D	HS35R1024837X40	Dynapar	PPR:1024/ Bore size: 5/8"/ Format: Differential Bi-Directional A/Anot,B/Bnot,Z/Znot/ Output: 5-26Vin, 5-26V differential line driver out (7272 chip set)/ Termination:10 pin connector W/ PIGTAIL. Housing: aluminum, slotted tether.	$1,845
360T 400T 440T 500 580	ECHS35RTEBC-D	HS35R1024837X40	Dynapar	PPR:1024/ Bore size: 5/8"/ Format: Differential Bi-Directional A/Anot,B/Bnot,Z/Znot/ Output: 5-26Vin, 5-26V differential line driver out (7272 chip set)/ Termination:10 pin connector W/ PIGTAIL. Housing: aluminum, slotted tether.	$1,845
	ECHSD38-D	HSD38102484370	Dynapar	PPR:1024/ Bore size: 5/8"/ Format: Differential Bi-Directional A/Anot,B/Bnot,Z/Znot/ Output: 5-26Vin, 5-26V differential line driver out (7272 chip set)/ Termination:10 pin MS connector/ Housing: aluminum, slotted tether with cover kit (basket). Optical	$1,418
	ECHS35R-D	HS35R10248377	Dynapar	PPR:1024/ Bore size: 5/8"/ Format: Differential Bi-Directional A/Anot,B/Bnot,Z/Znot/ Output: 5-26Vin, 5-26V differential line driver out (7272 chip set)/ Termination:10 pin MS connector/ Housing: aluminum, slotted tether. Optical	$1,418

Stub Shafts

TEFC W22 Motors

WEC Catalog Number	Applicable to W22*:	Description	List Price
STUBSHAFT-A-TEFC	140T	M8X1.25 THREAD for use with 5/8” bore encoder	$220
STUBSHAFT-B-TEFC	180T 210T 250T 280T 320T	M12X1.75 Thread for use with 5/8” bore encoder	$240
STUBSHAFT-C-TEFC	360T 400T 440T 580	M20X2.5 Thread for use with 5/8” bore encoder	$240
STUBSHAFT-D-TEFC	L440T 500		$270

IMPORTANT: These stub shafts might not be compatible with W21 motors
*General Purpose NEMA Premium® W22 frames 284T and above have NDE shaft drilled and tapped to receive stub shaft. Any other will require the NDE shaft to be drilled and tapped

TENV Motors (Vector Duty)

Current design of Vector Duty motors do not require stub shaft for encoder installation. The motor is being supplied with dual flange and extented NDE shaft for this purpose (5/8” diameter)

TEBC Motors

WEC Catalog Number	Applicable to W22*:	Description	List Price
STUBSHAFT-A-TEFC	140T	M8X1.25 THREAD for use with 5/8” bore encoder	$220
STUBSHAFT-B-TEFC	180T 210T 250T 280T 320T	M12X1.75 Thread for use with 5/8” bore encoder	$240
STUBSHAFT-C-TEFC	360T 400T 440T L440T 500 580	M20X2.5 Thread for use with 5/8” bore encoder	$240

Encoder Cables

WEC Catalog Number	Description	List Price
ENCCBLMS-10	10 FT. ENCODER CABLE WITH 10 PIN MS CONNECTOR	$232
ENCCBLMS-20	20 FT. ENCODER CABLE WITH 10 PIN MS CONNECTOR	$413
ENCCBLMS-30	30 FT. ENCODER CABLE WITH 10 PIN MS CONNECTOR	$454
ENCCBLMS-50	50 FT. ENCODER CABLE WITH 10 PIN MS CONNECTOR	$672

Data subject to change without notice.

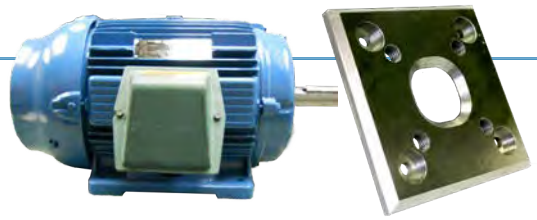

Competitor C-Box to WEG W22 Frame Adapter

The users report that during installation of new replacement motors, it is far easier to reuse the old junction box rather than break the box loose from the conduit. This becomes difficult however when going from one brand to another, as all manufacturers have a different bolt pattern and bolt size. This adaptor plate simplifies this process and makes it easier than ever before.

Part #	Description	List $
WEG280-SIEM	ADAPTER PLATE WEG/Siemens 280T	$181
WEG320-SIEM	ADAPTER PLATE WEG/Siemens 320T	$202
WEG360-400-SIEM	ADAPTER PLATE WEG/Siemens 360T & 400T	$224
WEG444/5-SIEM	ADAPTER PLATE WEG/Siemens 444/5T	$228
WEG445/7-447/9-SIEM	ADAPTER PLATE WEG/Siemens 445/7T & 447/9TT	$263
WEG180-USEM	ADAPTER PLATE WEG/USEM 180T	$177
WEG250-280-USEM	ADAPTER PLATE WEG/USEM 250T & 280T	$181
WEG320-USEM	ADAPTER PLATE WEG/USEM 320T	$202
WEG360-400-USEM	ADAPTER PLATE WEG/USEM 360T & 400T	$224
WEG445/7-447/9-USEM	ADAPTER PLATE WEG/USEM 445/7T & 447/9TT	$263
WEG250-280-REL	ADAPTER PLATE WEG/Reliance 250T & 280T	$181
WEG320-REL	ADAPTER PLATE WEG/Reliance 320T	$202
WEG360-400-REL	ADAPTER PLATE WEG/Reliance 360T & 400T	$224
WEG444/5-REL	ADAPTER PLATE WEG/Reliance 444/5T	$228
WEG445/7-447/9-REL	ADAPTER PLATE WEG/USEM 445/7T & 447/9TT	$263

Blower Kits for TEFC-to-TEBC Motor Conversion

Frame (NEMA/IEC)	W22 Blower Kit	List Price
140T/90	BLK-E140	$1,149
180T/112	BLK-E180	$1,260
210T/132	BLK-E210	$1,452
250T/160	BLK-E250-W22	$1,573
280T/180	BLK-E280	$1,658
320T/200	BLK-E320	$1,821
360T/225	BLK-E360-W22	$2,038
400T/250	BLK-E400-W22	$2,159
444/5T	BLK-E444/5-W22	$2,561
445/7T 447/9T/280	BLK-E445/7-447/9-W22	$2,561
500/315	BLK-EL449/500-W22	$3,025
L440T/315L	BLK-EL449/500-W22	$3,025
580/355	BLK-E580-W22	$3,632

Insulated Bearing Housing Endshields

Catalog Number	Frame Series	Bearing Size	List Price
NDE-E360T-314-I-W22	360T	6314	$2,150
NDE-E400T-314-I-W22	400T	6314	$2,150
NDE-E440T-314-I-W22	440T	6314	$2,592
NDE-E440T-316-I-W22	440T	6316	$2,592
NDE-E440T-319-I-W22	440T	6319	$2,592
NDE-EL440T-314-I-W22	L440	6314	$3,220
NDE-EL440T-319-I-W22	L440	6319	$3,220
NDE-E580-314-I-W22	580	6314	$3,371
NDE-E580-319-I-W22	580	6319	$3,371

Terminal Block Kits

IEC Frames	NEMA Frames*	Catalog Number	Bolt Thread	List Price
63	-	TERMBLCK-W22-63-100	M4	$35
71	-			
80	-			
90	140T			
100	-			
112	180T	TERMBLCK-W22-112/132	M5	$52
132	210T			
160	250T	TERMBLCK-W22-160/180	M6	$86
180	280T			
200	320T	TERMBLCK-W22-200	M8	$151
225	360T	TERMBLCK-W22-225/250	M10	$280
250	400T			
280	440T	TERMBLCK-W22-280	M12	$533
315	500	TERMBLCK-W22-315S/M	M12	$533
315L	L440T	TERMBLCK-W22-355M/L	M16	$1,032
355	580			

* NEMA Frames should require an adapter plate for the terminal block installation

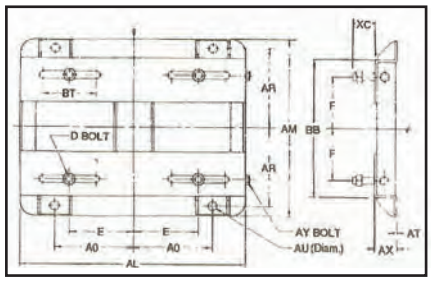

Motor Sliding Bases

Frame	Catalog Number	Style	AR	AU	BT	Shipping Weight (approx)	List Price
143T	SMB-143T	A	3 3/8	3/8	3	5	$73
145T	SMB-145T	A	3 7/8	3/8	3	6	$73
182T	SMB-182T	A	4 1/4	1/2	3	9	$87
182T	SMB-182TA2	A2	4 1/4	1/2	3	9	$120
184T	SMB-184T	A	4 3/4	1/2	3	10	$87
184T	SMB-184TA2	A2	4 3/4	1/2	3	10	$120
213T	SMB-213T	A	4 3/4	1/2	3 1/2	14	$118
215T	SMB-215T	A	5 1/2	1/2	3 1/2	15	$118
254T	SMB-254T	B2	6 5/8	5/8	4	17	$220
256T	SMB-256T	B2	7 1/2	5/8	4	18	$220
284T	SMB-284T	B2	7 1/2	5/8	4 1/2	21	$240
286T	SMB-286T	B2	8 1/4	5/8	4 1/2	22	$240
324T	SMB-324T	B2	8 1/2	3/4	5 1/4	31	$321
326T	SMB-326T	B2	9 1/4	3/4	5 1/4	32	$321
364T	SMB-364T	B2	9 1/8	3/4	6	44	$410
365T	SMB-365T	B2	9 5/8	3/4	6	45	$410
404T	SMB-404T	B2	9 7/8	7/8	7	55	$600
405T	SMB-405T	B2	105/8	7/8	7	61	$600
444T	SMB-444T	B2	11	7/8	7 1/2	76	$746
445T	SMB-445T	B2	12	7/8	7 1/2	78	$746
447T	SMB-447T	B2	13 3/4	7/8	7 1/2	89	$1,023
449T	SMB-449T	B2	16 1/4	7/8	7 1/2	95	$1,023
504T	SMB-504	C	12 1/2	1		108	$1,422
505T	SMB-505	C	13 1/2	1		135	$1,422
586T	SMB-580	Pair of Slide Rails	13	4 3/8		183	$3,504

Data subject to change without notice.

W22 Plastic Fan Guide

For "S" Standard Efficiency Level

IEC FRAME SIZE	NEMA FRAME SIZE	POLE	Catalog Number	List Price
63	-	All	FAN-E63	$6
71	-	All	FAN-E71	$7
80	-	All	FAN-E80	$8
90	143/5	All	FAN-FD56/140-17MM	$12
100	-	All	FAN-E100	$18
112	182/4	2	FAN-E180W2102P	$12
		4/6/8	FAN-E180W2104P	$19
132	213/5	2	FAN-E2102P	$17
		4/6/8	FAN-E2104P	$24
160	254/6	2	FAN-E2502P	$12
		4/6/8	FAN-E2504P	$24
180	284/6	2	FAN-E2802P	$12
		4/6/8	FAN-E2804P	$24
200	324/6	2	FAN-E3202P	$18
		4/6/8	FAN-E3204P	$27

For "P" High Efficiency Level

IEC FRAME SIZE	NEMA FRAME SIZE	POLE	Catalog Number	List Price
63	-	All	FAN-E63	$6
71	-	All	FAN-E71	$7
80	-	2	FAN-E71	$7
		4/6/8	FAN-E80	$8
90	143/5	2/4	FAN-E80	$8
		6/8	FAN-FD56/140-17MM	$12
100	-	All	FAN-E100	$18
112	182/4	2/4	FAN-E180W2102P	$12
		6/8	FAN-E180W2104P	$19
132	213/5	2/4	FAN-E180W2102P	$12
		6/8	FAN-E2104P	$24
160	254/6	2	FAN-E2502P	$12
		4/6/8	FAN-E2504P	$24
180	284/6	2	FAN-E2802P	$12
		4/6/8	FAN-E2804P	$24
200	324/6	2	FAN-E3202P	$18
		4/6/8	FAN-E3204P	$27

continued on next page

W22 Plastic Fan Guide - *continued*

For "T" Nema Prem. Efficiency Level

IEC FRAME SIZE	NEMA FRAME SIZE	POLE	Catalog Number	List Price
63	-	All	FAN-E63	$6
71	-	All	FAN-E71	$7
80	-	2	FAN-E71	$7
		4/6/8	FAN-E80	$8
90	143/5	2/4	FAN-E80	$8
		6/8	FAN-FD56/140-17MM	$12
100	-	All	FAN-E100	$18
112	182/4	2/4	FAN-E180W2102P	$12
		6/8	FAN-E180W2104P	$19
132	213/5	2/4	FAN-E180W2102P	$12
		6/8	FAN-E2104P	$24
160	254/6	2/4	FAN-E2502P	$12
		6/8	FAN-E2504P	$24
180	284/6	2/4	FAN-E2802P	$12
		6/8	FAN-E2804P	$24
200	324/6	2/4	FAN-E3202P	$18
		6/8	FAN-E3204P	$27

continued on next page

Data subject to change without notice.

W22 Plastic Fan Guide - *continued*

For "S" and "P" Stand. And High Efficiency Level (360 frame and up)

IEC FRAME SIZE	NEMA FRAME SIZE	POLE	Catalog Number	List Price
225S/M	364/5	2	FAN-E360/4002P-W22	$59
		4/6/8	FAN-11482642-W22	$74
250S/M	404/5	2	FAN-E360/4002P-W22	$59
		4/6/8	FAN-11482642-W22	$74
280S/M	444/5 445/7 447/9	2	FAN-E444-505/2P-W22	$63
		4/6/8	FAN-E440/500468P-W22	$89
315S/M	504/5	2	FAN-11482679-W22	$66
		4/6/8	FAN-E444-505/2P-W22	$63
315L	-	2	FAN-11482679-W22	$66
		4/6/8	N/A	
-	L447/9	2	FAN-11482679-W22	$66
		4/6/8	N/A	
355M/L	586/7	2	FAN-11482679-W22	$66
		4/6/8	N/A	
355A/B	588/9	All	N/A	

For "T" Nema Prem. Efficiency Level (360 and up)

IEC FRAME SIZE	NEMA FRAME SIZE	POLE	Catalog Number	List Price
225S/M	364/5	2	FAN-E360/4002P-W22	$59
		4	FAN-E444-505/2P-W22	$63
		6/8	FAN-11482642-W22	$74
250S/M	404/5	2	FAN-E360/4002P-W22	$59
		4	FAN-11482679-W22	$66
		6/8	FAN-11482642-W22	$74
280S/M	444/5 445/7 447/9	2	FAN-E444-505/2P-W22	$63
		4	FAN-11482642-W22	$74
		6/8	FAN-E440/500468P-W22	$89
315S/M	504/5	2	FAN-E444-505/2P-W22	$63
		4	FAN-11482642-W22	$74
		6/8	FAN-E440/500468P-W22	$89
315L	-	2	FAN-11482679-W22	$66
		4	FAN-E440/500468P-W22	$89
		6/8	N/A	
-	L447/9	2	FAN-11482679-W22	$66
		4/6/8	N/A	
355M/L	586/7	2	FAN-11482679-W22	$66
		4	FAN-E440/500468P-W22	$89
		6/8	N/A	
355A/B	588/9	All	N/A	

W22 Aluminum Fan Guide

For "S" Standard Efficiency Level

IEC FRAME SIZE	NEMA FRAME SIZE	POLE	Catalog Number	List Price
63	-	All	FAN-E63-AL	$55
71	-	All	FAN-E71-AL	$70
80	-	All	FAN-E80-AL	$88
90	143/5	All	FAN -E1404P-AL	$116
100	-	All	FAN-E100-AL	$161
112	182/4	2	FAN-E180W21024P-AL	$112
		4/6/8	FAN-E1804P-AL-B	$223
132	213/5	2	FAN-E210-2/8P-AL	$147
		4/6/8	FAN-E210-4/6P-AL	$313
160	254/6	2	FAN-E2502-4P-AL-W22	$116
		4/6/8	FAN-E2504P-AL-B	$259
180	284/6	2	FAN-E2802P-AL	$112
		4/6/8	FAN-E2804P-AL-W22	$161
200	324/6	2	FAN-E3202P-AL-W22	$157
		4/6/8	FAN-E3204P-AL	$421

For "P" High Efficiency Level

IEC FRAME SIZE	NEMA FRAME SIZE	POLE	Catalog Number	List Price
63	-	All	FAN-E63-AL	$55
71	-	All	FAN-E71-AL	$70
80	-	2	FAN-E71-AL	$70
		4/6/8	FAN-E80-AL	$88
90	143/5	2/4	FAN-E80-AL	$88
		6/8	FAN-E1404P-AL	$116
100	-	All	FAN-E100-AL	$161
112	182/4	2/4	FAN-E180W21024P-AL	$112
		6/8	FAN-E1804P-AL-B	$223
132	213/5	2/4	FAN-E180W21024P-AL	$112
		6/8	FAN-E210-4/6P-AL	$313
160	254/6	2	FAN-E2502-4P-AL-W22	$116
		4/6/8	FAN-E2504P-AL-B	$259
180	284/6	2	FAN-E2802P-AL	$112
		4/6/8	FAN-E2804P-AL-W22	$161
200	324/6	2	FAN-E3202P-AL-W22	$157
		4/6/8	FAN-E3204P-AL	$421

continued on next page

Data subject to change without notice.

W22 Aluminum Fan Guide

For "T" NEMA Premium® Efficiency Level

IEC FRAME SIZE	NEMA FRAME SIZE	POLE	Catalog Number	List Price
63	-	All	FAN-E63-AL	$55
71	-	All	FAN-E71-AL	$70
80	-	2	FAN-E71-AL	$70
		4/6/8	FAN-E80-AL	$88
90	143/5	2/4	FAN-E80-AL	$88
		6/8	FAN-E1404P-AL	$116
100	-	All	FAN-E100-AL	$161
112	182/4	2/4	FAN-E180W21024P-AL	$112
		6/8	FAN-E1804P-AL-B	$223
132	213/5	2/4	FAN-E180W21024P-AL	$112
		6/8	FAN-E210-4/6P-AL	$313
160	254/6	2/4	FAN-E2502-4P-AL-W22	$116
		6/8	FAN-E2504P-AL-B	$259
180	284/6	2/4	FAN-E2802P-AL	$112
		6/8	FAN-E2804P-AL-W22	$161
200	324/6	2/4	FAN-E3202P-AL-W22	$157
		6/8	FAN-E3204P-AL	$421

For "S" and "P" Efficiency Level (Frame sizes 360 and up)

IEC FRAME SIZE	NEMA FRAME SIZE	POLE	Catalog Number	List Price
225S/M	364/5	2	FAN-E360-4002PAL-W22	$205
		4/6/8	FAN-11101736-AL-W22	$580
250S/M	404/5	2	FAN-E360-4002PAL-W22	$205
		4/6/8	FAN-11101736-AL-W22	$580
280S/M	444/5 445/7 447/9	2	FAN-11101737-AL-W22	$250
		4/6/8	FAN-W22-11101738-AL	$902
315S/M	504/5	2	FAN-W22-11101739-AL	$280
		4/6/8	FAN-W22-11101738-AL	$902
315L	-	2	FAN-W22-11101739-AL	$280
		4/6/8	FAN-W22-11101744-AL	$2,042
-	L447/9	2	FAN-W22-11101739-AL	$280
		4/6/8	FAN-W22-11101744-AL	$2,042
355M/L	586/7	2	FAN-W22-11101739-AL	$280
		4	FAN-W22-11101744-AL	$2,042
		6/8	FAN-11101746-AL-W22	$3,293
355A/B	588/9	2	FAN-11272463-AL-W22	$511
		4	FAN-W22-11101744-AL	$2,042
		6/8	FAN-11101746-AL-W22	$3,293

continued on next page

W22 Aluminum Fan Guide - *continued*

For "T" Nema Prem. Efficiency Level(Frame sizes 360 and up)

IEC FRAME SIZE	NEMA FRAME SIZE	POLE	Catalog Number	List Price
225S/M	364/5	2	FAN-E360-4002PAL-W22	$205
		4	FAN-11101737-AL-W22	$250
		6/8	FAN-11101736-AL-W22	$580
250S/M	404/5	2	FAN-E360-4002PAL-W22	$205
		4	FAN-W22-11101739-AL	$280
		6/8	FAN-11101736-AL-W22	$580
280S/M	444/5 445/7 447/9	2	FAN-11101737-AL-W22	$250
		4	FAN-11101736-AL-W22	$580
		6/8	FAN-W22-11101738-AL	$902
315S/M	504/5	2	FAN-11101737-AL-W22	$250
		4	FAN-11101736-AL-W22	$580
		6/8	FAN-W22-11101738-AL	$902
315L	-	2	FAN-W22-11101739-AL	$280
		4	FAN-W22-11101738-AL	$902
		6/8	FAN-W22-11101744-AL	$2,042
-	L447/9	2	FAN-W22-11101739-AL	$280
		4/6/8	FAN-W22-11101744-AL	$2,042
355M/L	586/7	2	FAN-W22-11101739-AL	$280
		4	FAN-W22-11101738-AL	$902
		6/8	FAN-11101746-AL-W22	$3,293
355A/B	588/9	2	FAN-11272463-AL-W22	$511
		4	FAN-W22-11101744-AL	$2,042
		6/8	FAN-11101746-AL-W22	$3,457

W22 Fan Cover

IEC Frame Size	NEMA Frame Size	Note	Catalog Number	List Price
63	-		FCO-E63	$23
71	-		FCO-E71	$23
80	-		FCO-E80	$23
90	143/5		FCO-E140-W22	$26
100	-		FCO-E100	$33
112	182/4		FCO-E180-W22	$38
132	213/5		FCO-E210-W22	$53
160	254/6	For Motors with Grease Nipple	FCO-E250-W22	$121
180	284/6		FCO-E280-W22	$149
200	324/6		FCO-E320-W22	$256
225	364/5		FCO-E360-W22	$672
250	404/5		FCO-E400-W22	$672
280	444/5 445/7 447/9		FCO-E440-W22	$1,032
315	504/5		FCO-E500-W22	$1,032
-	L447/9		FCO-EL440-W22	$1,032
355	586/7 588/9		FCO-E580-W22	$1,605

Data subject to change without notice.

Rolled Steel Fan (-S)

NEMA Frame Size	Pole	Part number	List Price
48 W56	All	FAN-E80	$8
56 56H	All	FAN-FD56/140-15MM	$12
143/5	All	FAN-FD56/140-15MM	$12
182/4	2	FAN-FD56/140-15MM	$12
	4/6	FAN-E100	$18
213/5	2	FAN-E180W2102P	$12
	4/6	FAN-E180W2104P	$19
254/6	2	FAN-E2102P	$17
	4/6	FAN-E2104P	$24

Rolled Steel Fan Cover (-S)

NEMA Frame Size	Part number	List Price
48 W56	FCO-E48/W56-S	$20
56 56H	FCO-E56/140-S	$19
143/5	FCO-E56/140-S	$19
182/4	FCO-E180-S	$46
213/5	FCO-E210-S	$49
254/6	FCO-E250-S	$89

- Models in blue text are NEMA Premium Efficiency
- Models in green text are NEMA Super Premium Efficiency

Catalog Notes

1	1.0 Service Factor	31	Rating is suitable for 1.0SF @ 50Hz. Also suitable for next lower HP @ 1.15SF 50Hz
2	Aluminum Frame with Removable Feet	32	Suitable for 1.15SF @ 50°C ambient
3	Automatic Reset Thermal Overload Protector	33	Suitable for 380V 60Hz when wired as YY (double WYE)
4	Manual Reset Thermal Overload Protector	34	AEGIS® Inside
5	CCW Rotation Viewed from Shaft End - Non Reversible	35	AEGIS® ring installation reduces the available "N-W" length
6	Compressor Duty	36	Super Premium
7	F2 Mount	37	Design A
8	F3 Mount	38	TEAO - Totally Enclosed Air Over
9	Rolled Steel Frame - Cannot be modified with T Box on opposite side	39	Cannot be modified with T Box on opposite side
10	Not Thermally Protected	40	NDE shaft with 3/8” drive socket
11	Metal fan - Not suitable for division 2	41	Also rated 230/460V 50Hz 1.0 SF
12	Reduced Frame	42	Rated 50°C ambient
13	Resilient Base	43	With insulated non drive end housing
14	Roller Bearing	44	With air deflector. Flange MOD not available
15	Round Body - Drip Cover Included	45	Also rated 380V 50Hz
16	Split-Phase Motor	46	56J shaft end with dual opposed threads (7/16-20 UNF-2A R.H and 3/8-16 UNF-2A L.H)
17	TENV - Totally Enclosed Non Ventilated	47	Motor designed with copper bar rotor
18	Z-Frame; Bigger Shaft Diameter and Bearings	48	Motor suitable for safe area only
19	105K Temperature Rise; VFD service requires HP derate		
20	Round Body - Drip Cover NOT Included		
21	Stainless Steel Body		
22	Two Speed - Double Windings		
23	Two Speed - Single Winding		
24	Modified item. Usually ships in two weeks		
25	Brake rectifier suitable for 230VAC		
26	Brake rectifier suitable for 460VAC		
27	For Export Only (not to be used in the USA) due to Certification and/or Efficiency requirements.		
28	ODP Fan Cooled		
29	Standard Efficiency		
30	High Efficiency (EPACT)		