PRODUCT INFORMATION PACKET

Model No: 090LT34FH6302
Catalog No: R421A
3,3600,TEFC,90L,3/60/575
TEFC

Regal and Marathon are trademarks of Regal Beloit Corporation or one of its affiliated companies.
©2018 Regal Beloit Corporation, All Rights Reserved. MC017097E

Nameplate Specifications

Output HP	**3 Hp**	Output KW	**2.2 kW**
Frequency	**60 Hz**	Voltage	**575 V**
Current	**3.0 A**	Speed	**3500 rpm**
Service Factor	**1.15**	Phase	**3**
Efficiency	**87.5 %**	Duty	**Continous**
Insulation Class	**F**	Design Code	**B**
KVA Code	**K**	Frame	**90S**
Enclosure	**Totally Enclosed Fan Cooled**	Overload Protector	**No**
Ambient Temperature	**40 °C**	Drive End Bearing Size	**6205**
Opp Drive End Bearing Size	**6205**	UL	**Recognized**
CSA	**Y**	CE	**Y**
IP Code	**55**		

Technical Specifications

Electrical Type	**Squirrel Cage Inverter Rated**	Starting Method	**Line Or Inverter**
Poles	**2**	Rotation	**Reversible**
Mounting	**B3**	Motor Orientation	**Horizontal**
Drive End Bearing	**Ball**	Opp Drive End Bearing	**Ball**
Frame Material	**Aluminum**	Shaft Type	**IEC**
Overall Length	**13.42 in**	Shaft Diameter	**1.000 in**
Shaft Extension	**1.96 in**	Assembly/Box Mounting	**F3**
Outline Drawing	**16986200ME**	Connection Diagram	**00546801ME**

This is an uncontrolled document once printed or downloaded and is subject to change without notice. Date Created: 07/02/2018

169862-00ME

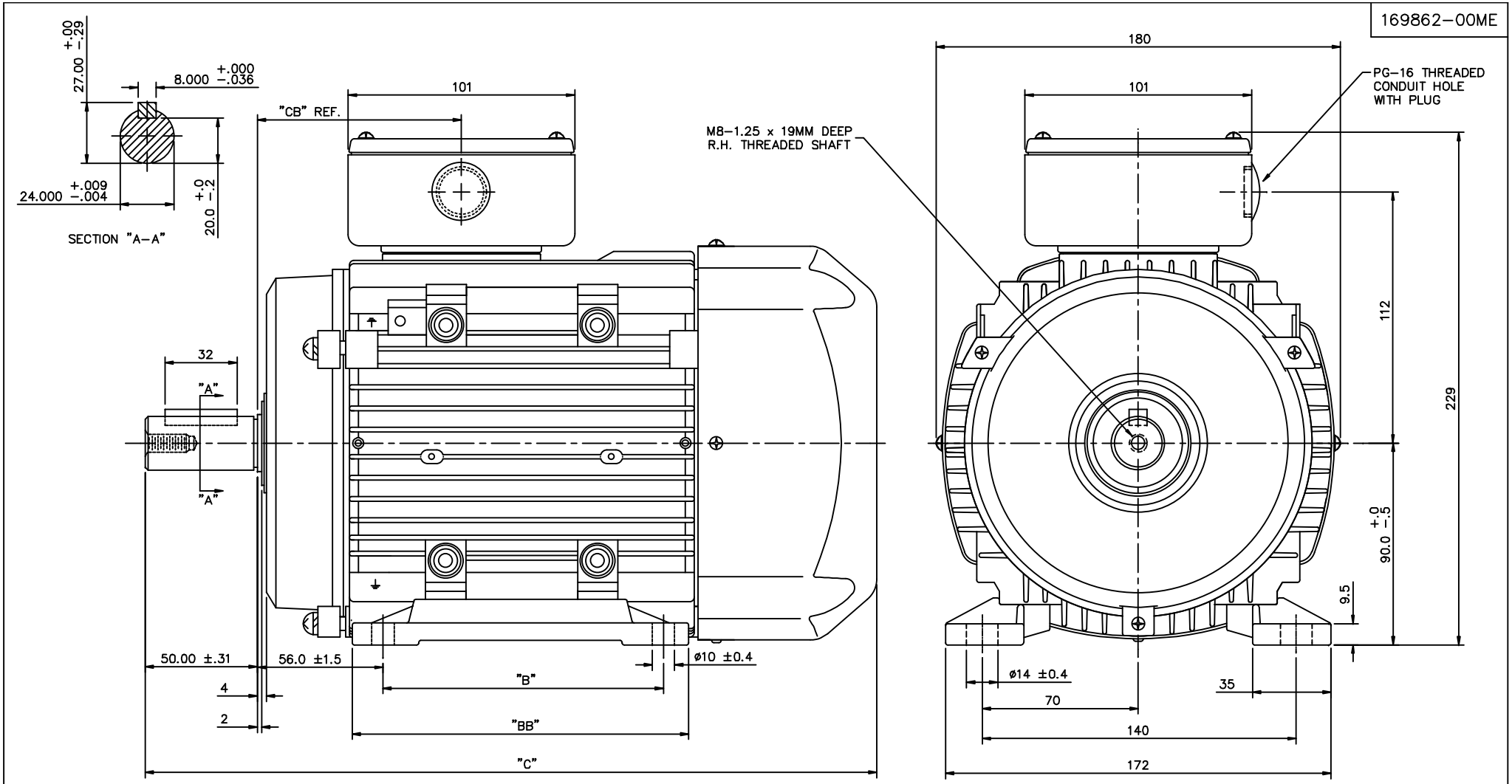

FRAME DESIGN	"B"	"BB"	"CB"	"C"
90L	125±0.7	150	91	341
90S	100±0.7	125	79	326

NO.	REVISION	BY & DATE	CHK

TOLERANCES UNLESS SPECIFIED

DEC.	METRIC
.X	±2.5
.XX	±.76
.XXX	±.127
.XXXX	±.0127
ANG	±1/2°

MARATHON ELECTRIC

TITLE: METRIC OUTLINE, IMB3 IEC–90 FRAME

MAT'L.: ALUMINUM

FINISH

CAD FILE: 16986200ME

RFP

DIST

SIZE: B

DRAWING NO.: 169862–00ME

REV.

DRAWN ADS 01/24/02

CHK

APPD

SCALE 1=1.6

REF OSVC–300–551

FMF

PREV

THIS DRAWING IN DESIGN AND DETAIL IS OUR PROPERTY AND MUST NOT BE USED EXCEPT IN CONNECTION WITH OUR WORK ALL RIGHTS OF DESIGN AND INVENTION ARE RESERVED
THIS IS AN ELECTRONICALLY GENERATED DOCUMENT – DO NOT SCALE THIS PRINT

Dealers Industrial Equipment -- Visit https://DealersElectric.com or call (908) 688-1966 for all of your electric motor & VFD needs!

5/7/2012 11:28:06 AM - Converted by Connexus

005468-01ME

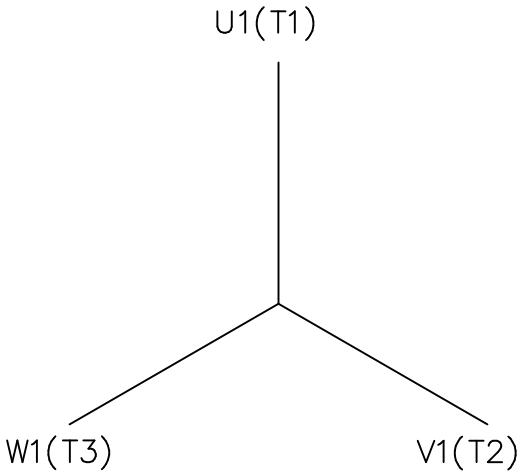

IEC MARKINGS

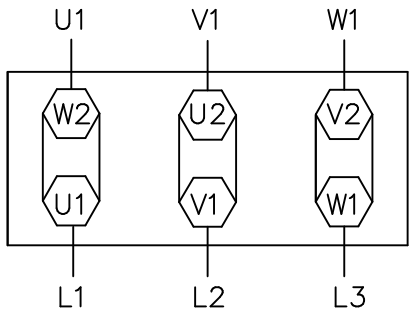

NEMA MARKINGS

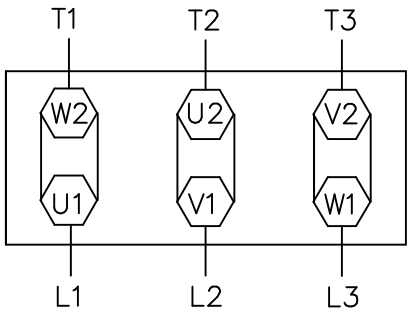

TO REVERSE ROTATION INTERCHANGE ANY TWO LINE LEADS

NO.	REVISION	BY & DATE	CHK

TOLERANCES UNLESS SPECIFIED

DEC.	INCHES
.X	±.1
.XX	±.01
.XXX	±.005
.XXXX	±.0005
ANG	±1/2°

MARATHON ELECTRIC

TITLE EXTERNAL WIRING DIAGRAM TYPE "T" W/O PROT W/TERM. BLOCK

MAT'L.

FINISH

CAD FILE 00546801ME

RFP

DIST

DRAWN JGO 3/10/04

CHK

APPD

SCALE 3=4

REF

FMF

PREV

SIZE A

DRAWING NO. 005468-01ME

REV.

THIS DRAWING IN DESIGN AND DETAIL IS OUR PROPERTY AND MUST NOT BE USED EXCEPT IN CONNECTION WITH OUR WORK ALL RIGHTS OF DESIGN AND INVENTION ARE RESERVED THIS IS AN ELECTRONICALLY GENERATED DOCUMENT – DO NOT SCALE THIS PRINT

Dealers Industrial Equipment -- Visit https://DealersElectric.com or call (908) 688-1966 for all of your electric motor & VFD needs!

Uncontrolled Copy

CERTIFICATION DATA SHEET

Model#:	90LT34FH6302 A	**WINDING#:**	QT9026 FR 4
CONN. DIAGRAM:	00546801ME	**ASSEMBLY:**	F3
OUTLINE:	16986200ME		

TYPICAL MOTOR PERFORMANCE DATA

HP	KW	SYNC. RPM	F.L. RPM	FRAME	ENCLOSURE	KVA CODE	DESIGN
3	2.24	3600	3500	90S	TEFC	K	B

PH	Hz	VOLTS	FL AMPS	START TYPE	DUTY	INSL	S.F	AMB°C	ELEVATION
3	60	575	3.0	LINE OR INVERTER	CONTINUOUS	F5	1.15	40	3300

FULL LOAD EFF: 87.5	3/4 LOAD EFF: 88.3	1/2 LOAD EFF: 87.4	GTD. EFF	ELEC. TYPE	NO LOAD AMPS
FULL LOAD PF: 87.5	3/4 LOAD PF: 82.9	1/2 LOAD PF: 80.3	0	SQ CAGE INV RATED	.8

F.L. TORQUE	LOCKED ROTOR AMPS	L.R. TORQUE	B.D. TORQUE	F.L. RISE°C
4.498 LB-FT	34	13.24 LB-FT 294	16.45 LB-FT 366	36

SOUND PRESSURE @ 3 FT.	SOUND POWER	ROTOR WK^2	MAX. WK^2	SAFE STALL TIME	STARTS /HOUR	APPROX. MOTOR WGT
- dBA	- dBA	0 LB-FT^2	- LB-FT^2	10 SEC.	-	0 LBS.

*** SUPPLEMENTAL INFORMATION ***

DE BRACKET TYPE	ODE BRACKET TYPE	MOUNT TYPE	ORIENTATION	SEVERE DUTY	HAZARDOUS LOCATION	DRIP COVER	SCREENS	PAINT
STANDARD	STANDARD	B3	HORIZONTAL	FALSE	NONE	FALSE	NONE	BLUE (ENAMEL)

BEARINGS		GREASE	SHAFT TYPE	SPECIAL DE	SPECIAL ODE	SHAFT MATERIAL	FRAME MATERIAL
DE	OPE						
BALL 6205	BALL 6205	POLYREX EM	STANDARD IEC	NONE	NONE	1045 HOT ROLLED (C-204)	ALUMINUM

THERMO-PROTECTORS				THERMISTORS	CONTROL	SPACE /n HEATERS
THERMOSTATS	PROTECTORS	WDG RTDs	BRG RTDs			
NONE	NOT	NONE	NONE	NONE	FALSE	NONE VOLTS

If Inverter equals NONE, contact factory for further information

INVERTER TORQUE: CONSTANT 20:1
INV. HP SPEED RANGE: 1.5 X BASE SPEED

ENCODER: NONE
NONE NONE
NONE NONE PPR

BRAKE: NONE NONE
NONE P/N NONE
NONE NONE
NONE FT-LB NONE V NONE Hz

*
N
O
T
E
S
*

DATE: 06/28/2017 04:16:31 AM
FORM 3531 REV.3 02/07/99
** Subject to change without notice.

Dealers Industrial Equipment -- Visit https://DealersElectric.com or call (908) 688-1966 for all of your electric motor & VFD needs!