PRODUCT INFORMATION PACKET

Model No: 056T11WD5386
Catalog No: N497
0.75 HP Washdown Motor, 3 phase, 1200 RPM, 208-230/460 V, 56C Frame, TENV
Paint Free NEMA Washdown Motors

Regal and Marathon are trademarks of Regal Beloit Corporation or one of its affiliated companies.
©2019 Regal Beloit Corporation, All Rights Reserved. MC017097E

Nameplate Specifications

Output HP	0.75 Hp	Output KW	0.56 kW
Frequency	60 Hz	Voltage	208-230/460 V
Current	3.0-1.5/ A	Speed	1140 rpm
Service Factor	1.15	Phase	3
Efficiency	80 %	Power Factor	59
Duty	Continuous	Insulation Class	F
Design Code	B	KVA Code	L
Frame	56C	Enclosure	Totally Enclosed Non Ventilated
Thermal Protection	No	Ambient Temperature	40 °C
Drive End Bearing Size	6205	Opp Drive End Bearing Size	6203
UL	Recognized	CSA	Y
CE	Y	IP Code	55

Technical Specifications

Electrical Type	Squirrel Cage Inverter Rated	Starting Method	Line Or Inverter
Poles	6	Rotation	Reversible
Mounting	Rigid Base	Motor Orientation	Horizontal
Drive End Bearing	Ball	Opp Drive End Bearing	Ball
Frame Material	Stainless Steel	Shaft Type	NEMA 56
Overall Length	9.78 in	Shaft Diameter	0.625 in
Shaft Extension	2.06 in	Assembly/Box Mounting	F1 Only

This is an uncontrolled document once printed or downloaded and is subject to change without notice. Date Created:01/11/2019

169929.00

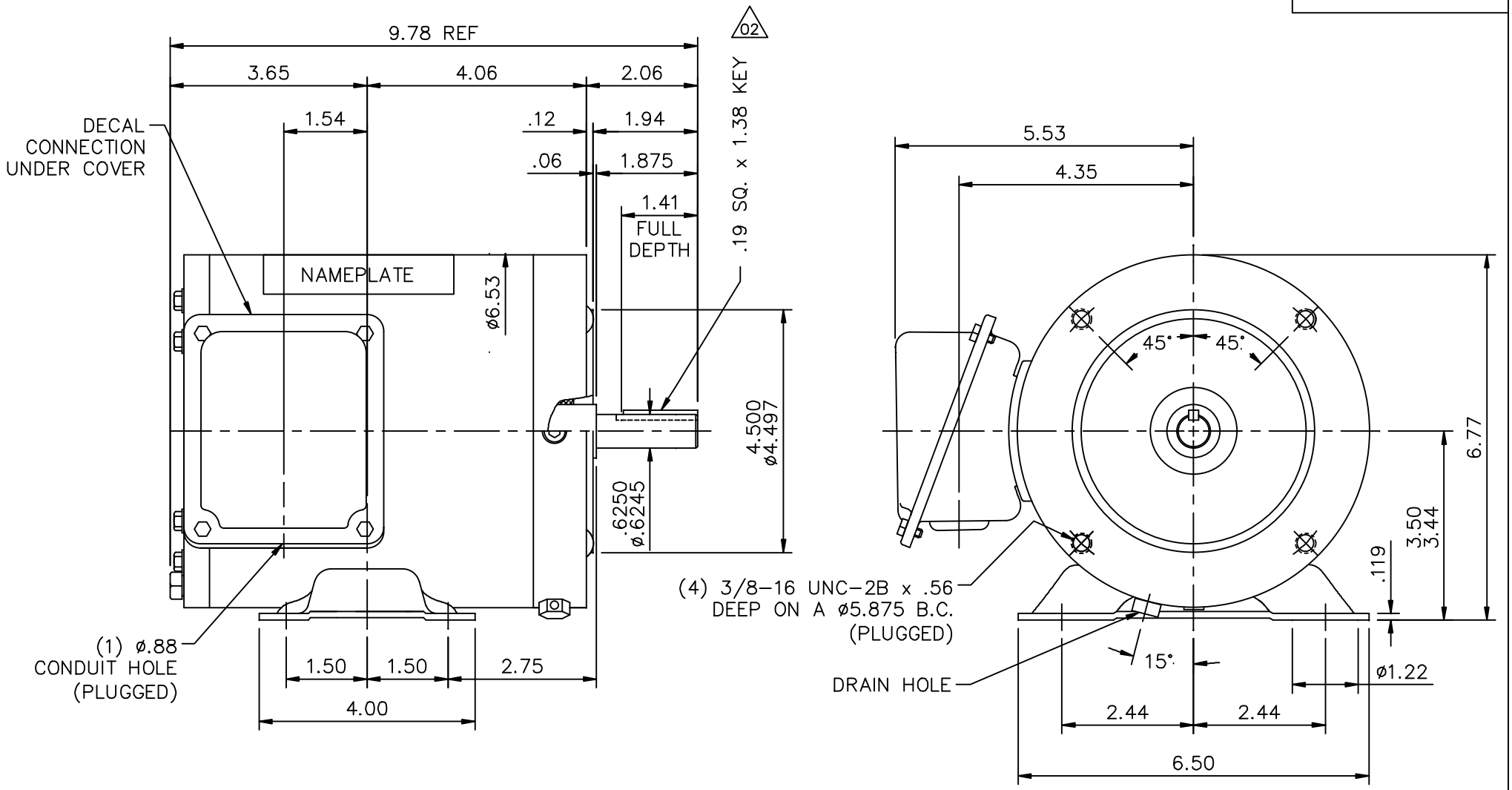

MAXIMUM FACE RUNOUT TO BE .004 T.I.R.
MAXIMUM PILOT ECCENTRICITY .004 T.I.R.
PERMISABLE SHAFT RUNOUT .002 T.I.R.

GASKETS THROUGHOUT

NO.	REVISION	BY & DATE	CHK
02	UPDATED SHAFT EXT DIMS	RDW 4/26/04	SW
01	CONDUIT HOLE WAS 1/2-14 NPT, DIM .157 WAS .12	SW 10/7/2003	RDW

TOLERANCES UNLESS SPECIFIED

DEC.	INCHES
.X	±.1
.XX	±.03
.XXX	±.005
.XXXX	±.0005
ANG	±1/2°

LEESON

ELECTRIC MOTORS
GEARMOTORS
AND DRIVES

TITLE: OUTLINE – 56C FRAME TENV – RIGID "C"

MAT'L.

FINISH

CAD FILE 16992900

RFP

DIST

DRAWN	MGM 04/10/03
CHK	RDW 04/10/03
APPD	
SCALE	3=8
REF	
FMF	
PREV	

SIZE A | DRAWING NO. 169929.00 | REV. 01

THIS DRAWING IN DESIGN AND DETAIL IS OUR PROPERTY AND MUST NOT BE USED EXCEPT IN CONNECTION WITH OUR WORK ALL RIGHTS OF DESIGN AND INVENTION ARE RESERVED
THIS IS AN ELECTRONICALLY GENERATED DOCUMENT – DO NOT SCALE THIS PRINT

Dealers Industrial Equipment -- Visit https://DealersElectric.com or call (908) 688-1966 for all of your electric motor & drive needs!

11/14/2011 10:18:46 AM - Converted by Connexus

Uncontrolled Copy

P.O. BOX 8003
WAUSAU, WI 54401-8003
PH. 715-675-3311

DATA VOLTS: 460

CERTIFICATION DATA SHEET

CUSTOMER:
ORDER #:
CONN. DIAGRAM: 005010.01
OUTLINE: 16992900
WINDING: QT6364 NR 3
SPEED:

CUSTOMER P.O. #:
REFERENCE MODEL #: 56T11WD5386
CAT #: N497
CUSTOMER PART #:
MOUNTING: F1 ONLY

TYPICAL MOTOR PERFORMANCE DATA

HP	KW	SYNC RPM	FL RPM	FRAME	ENCLOSURE	TYPE	KVA CODE	DESIGN
0.75	0.56	1200	1168	56C	TENV	NA	L	B

PH	HZ	VOLTS	AMPS	START TYPE	DUTY	INSL	S.F.	AMB	ELEV.
3	60/50	208-230/460#190/380	3-3/1.5 &2.7/1.35	LINE OR INVERTER	CONT	F	1.15	40	3300

F.L. EFF	81.1	3/4 LD EFF	79.0	1/2 LD EFF	72.3	GTD EFF	ELECT. TYPE
F.L. PF	59.2	3/4 LD PF	50.3	1/2 LD PF	39.4	0.0	SQ CAGE INV RATED

F.L. TORQUE	LR AMPS @ 460 V	L.R. TORQUE	B.D. TORQUE	F.L. RISE (°C)
3.4 LB-FT	9.5	10.8 LB-FT 318%	14.0 LB-FT 412%	88

@ 3 FT.	POWER	ROTOR WK²	MAX. LOAD WK²	SAFE STALL TIME	STARTS/HOUR	MOTOR WGT
999 dBA	1008 dBA	-1.00 LB-FT²	0 LB-FT²	0 SEC.	0	0 LB.

*** SUPPLEMENTAL INFORMATION ***

DE BRACKET TYPE	ODE BRACKET TYPE	MOUNT TYPE	MOTOR ORIENTATION	SEVERE DUTY	HAZARDOUS LOCATION	DRIP COVER	SCREENS	PAINT
C-FACE	STANDARD	RIGID	HORIZONTAL	NO	NONE	NO	NONE	NO PAINT

BEARINGS DE	BEARINGS ODE	GREASE	SHAFT TYPE	SPECIAL DE	SPECIAL ODE	SHAFT MATERIAL	FRAME MATERIAL
BALL 6205	BALL 6203	POLYREX EM	STANDARD 56	NONE	NONE	303 STAINLESS (C-501)	STAINLESS STEEL

THERMOSTATS	PROTECTORS	WDG RTD's	BRG RTD's	THERMISTORS	CONTROL	SPACE HEATERS
NONE	NOT	NONE	NONE	NONE	FALSE	NA

R1 (ohms/ph)	R2 (ohms/ph)	X1 (ohms/ph)	X2 (ohms/ph)	Xm (ohms/ph)	VIBRATION (in/sec)	FLOAT
0	0	0	0	0	0.080	ODE

* NOTES *

INVERTER TORQUE: CONSTANT 1000:1
INV. HP SPEED RANGE: 1.5 X BASE SPEED

ENCODER: NONE
NONE
NONE NONE PPR

BRAKE: NONE
NONE NONE
FT-LB: NA
VOLTAGE: NONE HZ:
UL: V-INS, CONST UL REC

PREPARED BY: FAREEDA DUDEKULA
DATE: 9/17/2018

FORM: 3531 REV_4 2/27/06

Dealers Industrial Equipment -- Visit https://DealersElectric.com or call (908) 688-1966 for all of your electric motor & drive needs!

Uncontrolled Copy

Data Sheet

Date: 12/10/2018
Customer:
Attention:
Submitted by: FAREEDA DUDEKULA

marathon electric

56T11WD5386

Submittal

Data @ 460 V

Motor Load Data

Load	0%	25%	50%	75%	100%	115%	125%	LR	
Current (Amps)	1.09	1.12	1.20	1.32	1.46	1.56	1.63	9.5	
Torque (ft-lb)	0.00	0.83	1.62	2.50	3.4	3.9	4.3	10.8	
RPM	1200	1191	1184	1177	1168	1,163	1159	0	
Efficiency (%)		62.7	72.3	79.0	81.1	81.8	81.8		
P.F. (%)	8.5	25.1	39.4	50.3	59.2	63.4	65.8	0.0	

Motor Speed Data

	LR	Pull-Up	BD	Rated	Idle
Speed (RPM)	0	205	893	1168	1200
Current (Amps)	9.5	8.7	5.7	1.46	1.09
Torque (ft-lb)	10.8	10.2	14.0	3.4	0.00

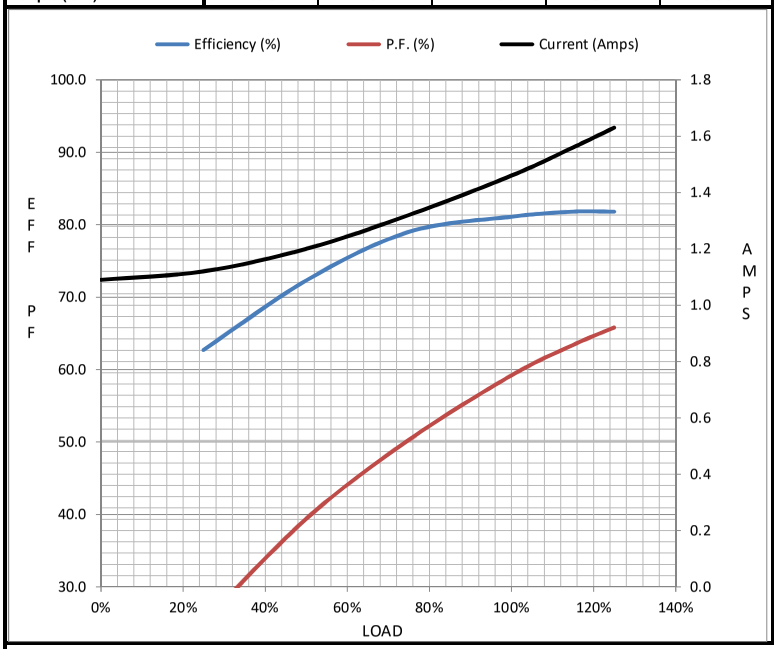

Information Block

HP	0.8	
Sync. RPM	1200	
Frame	56	
Enclosure	TENV	
Construction	TS	
Voltage	208-230/460#190/380	V
Frequency	60	Hz
Design	B	
LR Code letter	L	
Service Factor	1.0	
Temp Rise @ FL	88	° C
Duty	CONT	
Ambient	40	° C
Elevation	1,000	feet
Rotor/Shaft wk²	-1.00	Lb-Ft²
Ref Wdg	QT6364 NR	
Sound Pressure @ 1M	999	dBA
VFD Rating	CONSTANT 1000:1	
Outline Dwg	16992900	
Conn. Diag	005010.01	

Additional Specifications:
0
0

EQUIV CKT (OHMS / PHASE)

R1	R2	X1	X2	Xm
0.0000	0.0000	0.0000	0.0000	0.0000

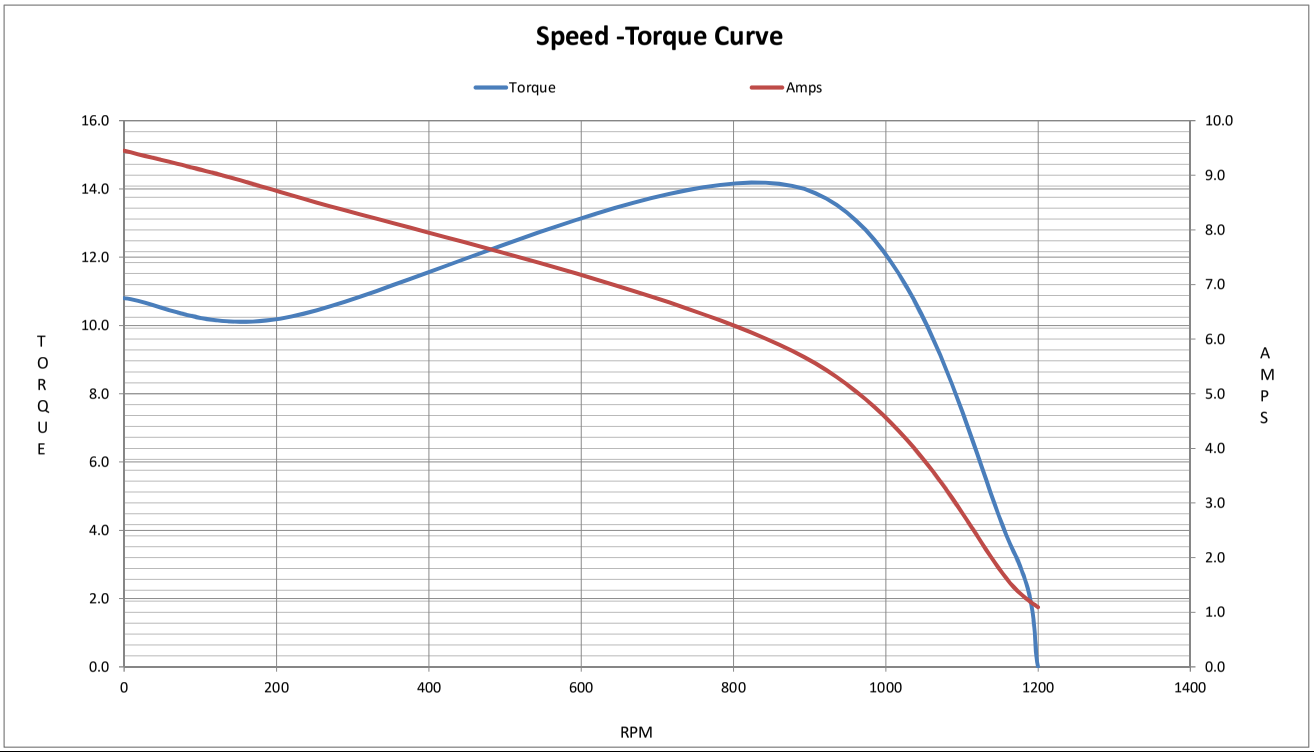

Dealers Industrial Equipment -- Visit https://DealersElectric.com or call (908) 688-1966 for all of your electric motor & drive needs!